Product Info

GRP TUBEdek® Support

GEA 2H Water Technologies delivers support systems especially designed for TUBEdek® modules. The use of these systems minimizes turbulences and sludge deposit.

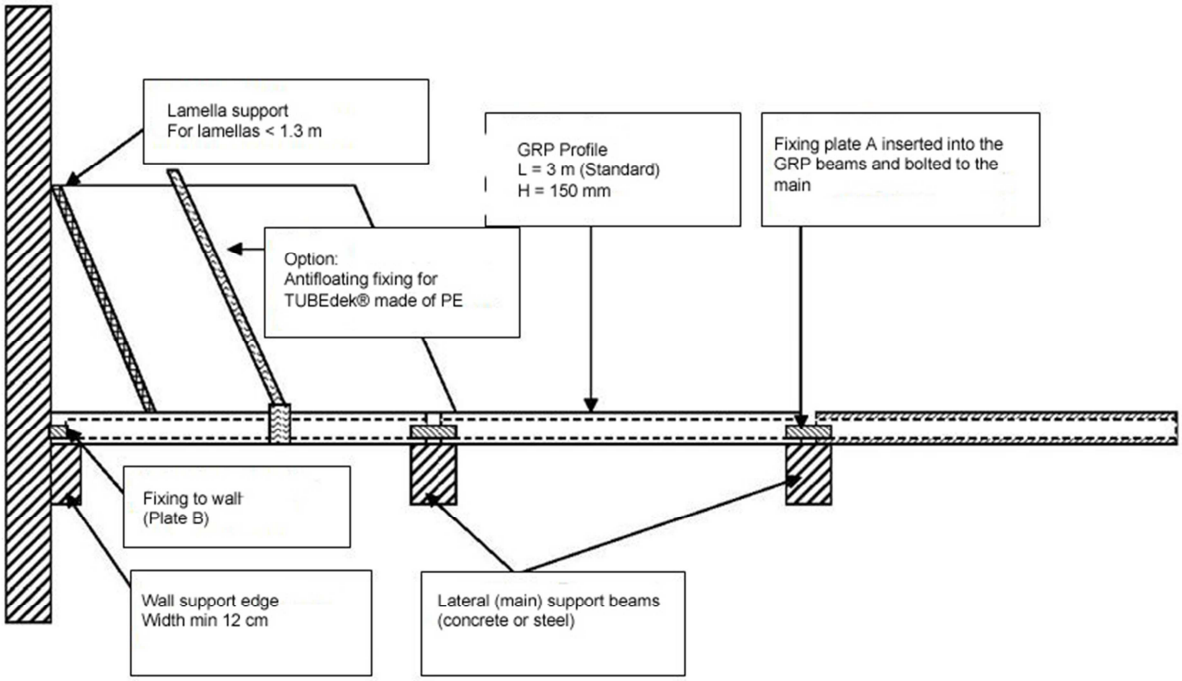



TUBEdek® on support

Beam is below the side wall of the TUBEdek® channel, providing a strong support and minimizing the influence on the process

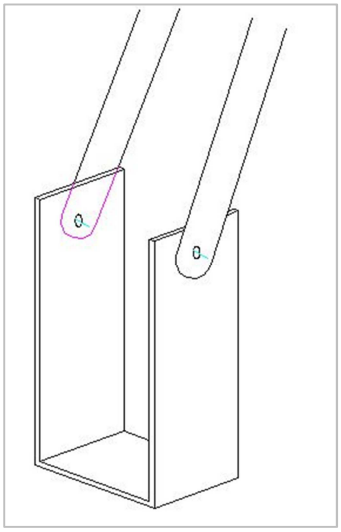

Antifloating system for PE

Fixing to the beam

The GRP support can be applied with two or three beams per module. In general, TUBEdek® modules are supplied with half channels on either side. These half channels can overlap and thus compensate building and TUBEdek® tolerances.

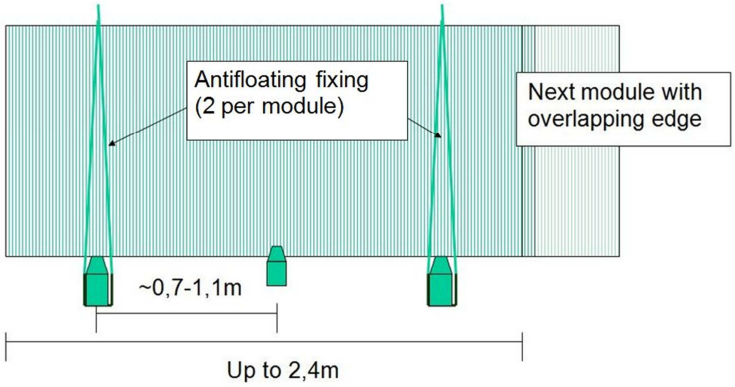

Above the central beam the TUBEdek® receives a longitudinal groove. This ensures that the GRP beam sits correctly under the edge of the channels. To compensate the groove, the central beam sits on a 5 mm thick support plate. The spacing between the beams must be designed correctly, so that all beams sit under the edges of the channels.

The GRP beams can be loaded up to 500 kg for the standard length of 3 m. We recommend designing waste water applications with a load of 250 kg/m³ of TUBEdek® and potable water applications with 150 kg/m³ TUBEdek® (Tank drained and TUBEdek® loaded with sludge). Yet it stays in the responsibility of the customer to calculate and to control the applicable load.

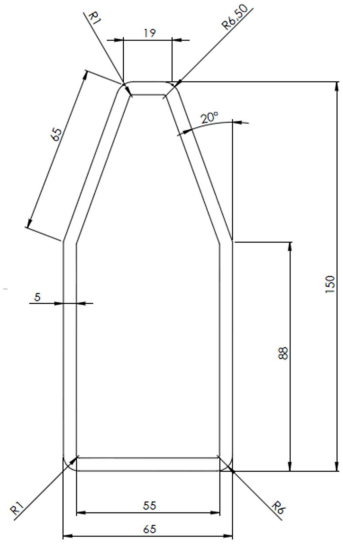

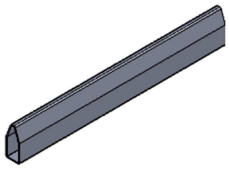

GRP Beam:

Length:	3 m (Standard)
	Other length upon request
Resin:	UP
Weight:	3.5 kg/m

This information has been put together with greatest care. Nevertheless we reserve the right to make changes at any time without notice. We recommend to check at GEA 2H whether this information is still fully valid, before using it for final designs. GEA 2H takes no liability when superseded versions of this information are used.

GEA Heat Exchangers

GEA 2H Water Technologies GmbH

Dieselweg 5 · D-48493 Wettringen - Telefon +49 25 57 / 93 90-0 - Fax +49 25 57 / 93 90-49
www.gea-2h.com - info.2h.de@geagroup.com