CHANGING
GEA HEAT EXCHANGERS

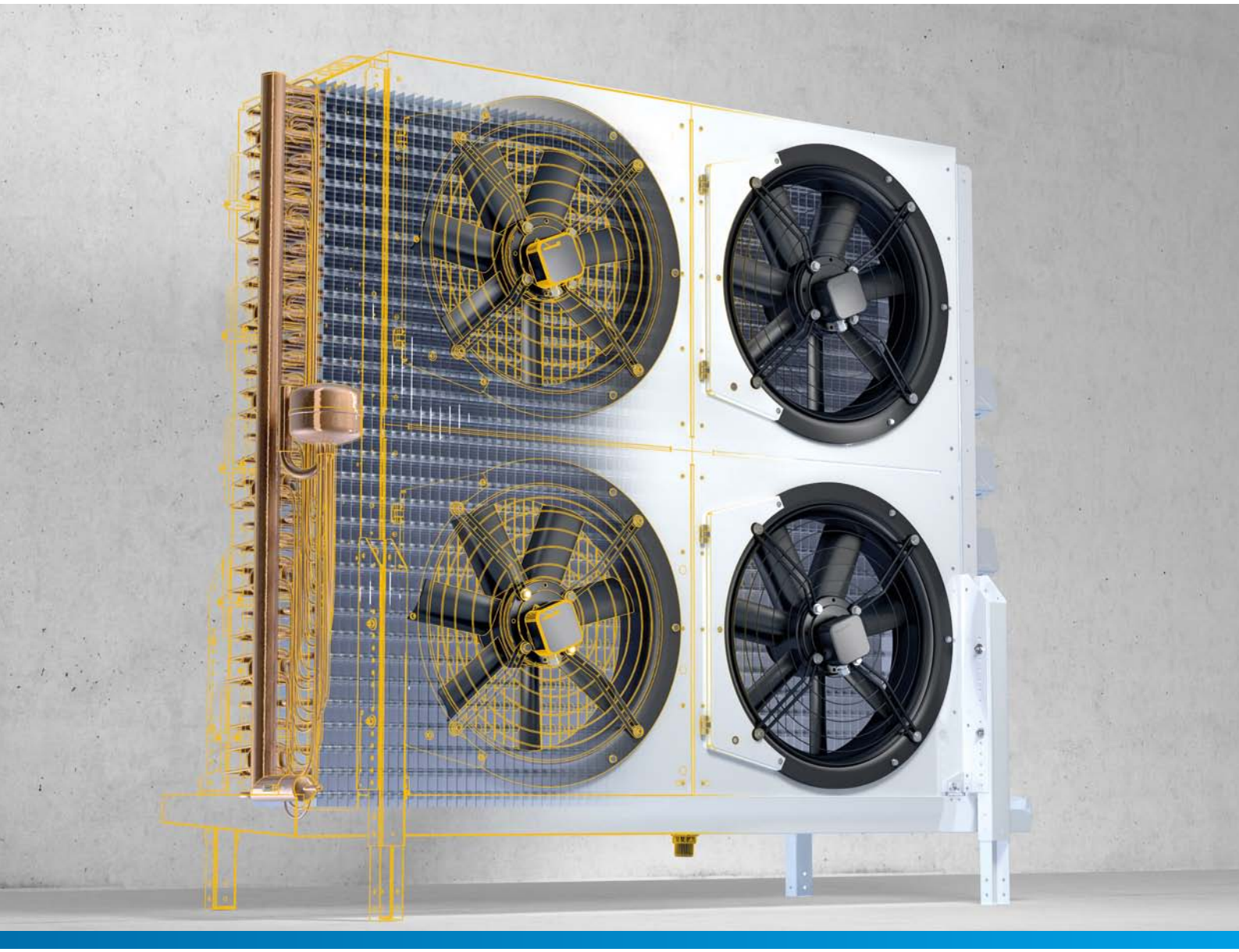

Küba SF *blastfreezer*

High-performance air cooler for blast chilling and shock freezing

Küba SF *blastfreezer*

High-performance air cooler for blast chilling and shock freezing







Large fin spacing to ensure long service life

Optimal air velocity

High air circulation rate and indirect air flow over

Height-adjustable floor brackets

Type designation code

1	2	3	4		5	6	7	8
SF	L	E	56	-	F	6	6	C

1 Model range designation
2 Fin spacing
3 Electric defrost
4 Fan diameter
5 Refrigerant
6 Number of rows deep
7 Number of fans
8 Generation code

Küba SF *blastfreezer*



Abbildung zeigt Küba SF *blastfreezer* mit Variante V1.60 & V3.10

Capacity range (for SC2)

10 kW — 70 kW

Temperature range (t_{L1})

-30°C 0°C +20°C

Number of fans

to

Content

Application benefits for contractors and operators 4
Basic version 6
Technical data (Standard) – SFB (E) 8
Technical data (Standard) – SFK (E) 8
Technical data (Standard) – SFL (E) 8
Technical data (V1.60) – SFB (E) 9
Technical data (V1.60) – SFK (E) 9
Technical data (V1.60) – SFL (E) 9
Dimensions, weights, electric defrost, drain 10
Variants 12
Accessories 13



Applications

- Blast chilling
- Shock freezing

Küba SF *blastfreezer*

Application benefits for contractors and operators

Shock freezing foodstuffs is technically extremely demanding on air coolers. The Küba SF *blastfreezer* meets these demands effortlessly.

The technical specifications covering the cooling surface, the air volume, the finned piping system and the distribution of the refrigerant have all created benchmarks and guarantee the reliability of the process.

They are accurately balanced in the SF *blastfreezer* to optimise shock freezing.

Height-adjustable floor brackets

- High-performance air cooler for shock cooling and freezing meat and sausage products, baked goods, pizza and frozen vegetables.
- Dimensions are designed to suit standard tray carts: perfect distribution of cold air directly onto the refrigerated goods.
- Height-adjustable floor brackets: for perfect adjustment to on-site conditions.

Küba SF *blastfreezer*

from the Küba Blue Line production range

Optimal air volume flows

- Optimal air volume flow for shock freezing: Forced-draft fans guide the air flow horizontally through the heat exchanger. This creates maximum air velocity over refrigerated goods exposed to the air flow.
- Height-adjustable floor brackets: for perfect adjustment to on site conditions.
- High air circulation rate with indirect air flow over the refrigerated goods: This ensures good economy, retention of produce quality and reaching the core temperature of the produce in the shortest possible time.

Excellent Küba quality

- Excellent Küba quality: with HFE® tube/fin system and CAL® refrigerant distributor
- Hinged drip tray on both sides: standard
- Correspondingly large fin spacing guarantees quick cooling: this results in a long service life of the evaporator.

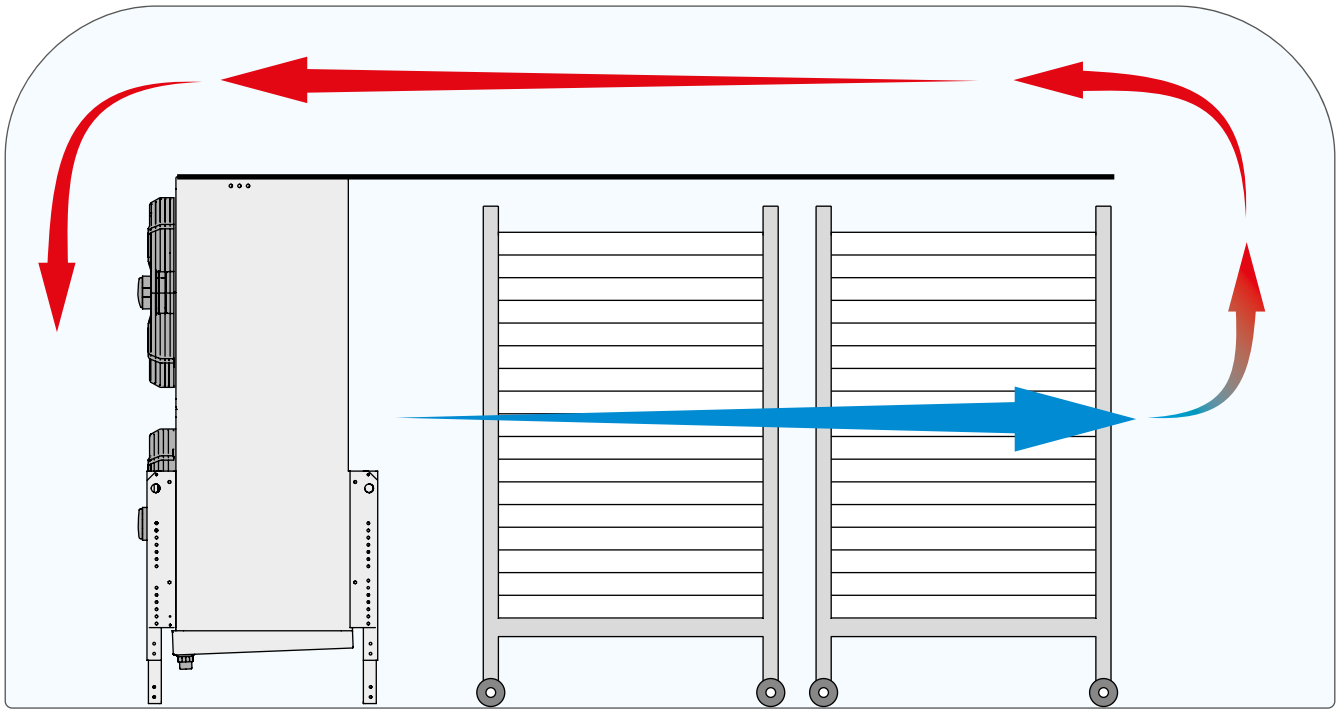

More powerful motors: Version V 1.60

- Even more flow optimised through precise coordination of fans and heat exchangers
  - Improved distribution of air in the heat exchanger
  - Integrated full bell mouth
  - ErP 2015 compliant
  - Significantly improved energy efficiency
- Low installation depth of approx. 200 mm
- The electrical power consumption has been reduced considerably.
- The saved electrical energy is not absorbed by the evaporator. It contributes to the increase in actual cooling power.
- Swivelling fan system (available as a variant)
  - Increased stability when opening
  - Increased opening angle
  - Only three screws to remove before opening

Küba SF *blastfreezer*

Basic version



Casing

- Smooth Sendzimir galvanised steel
- High-grade powder coating RAL 9018 papyrus white
- Food-safe
- Best quality powder coated edges
- Easy to clean
- Hinged drip tray
- Stainless steel mounting material
- Plastic drain
- Floor mounting brackets are adjustable on both sides, from 25 mm increments to 150 mm increments



Heat exchanger for direct expansion

- Heat exchanger with aligned tube pattern; internally grooved special copper tubes (drawn oxygen-free), according to DIN EN 12735-1,2; diameter: 15 mm; with closed pure-aluminum HFE® fins
- Fin spacing: B = 7 mm | K = 10 mm | L = 12 mm
- Fins flared to form-fit the core tube
- Highly effective heat transfer and compact design
- Küba-CAL® refrigerant distributors for multiple injections



Electric defrost

- Heaters with CrNi steel sleeve
- Vapour-tight connections
- Mains voltage: 230 V-1/400V-3-Y
- Wired ready to connect in junction boxes
- Optimized tubular heater configurations ensure fast and even defrosting
- Fins flared to form-fit the core tube
- Aluminium heat pipes that ensure excellent heat transfer to the fins and thus effective defrosting cycles with optimized service life.
- Integrated tube bushings allow a subsequent modification to an electric defrost system.



Fans

- Fan diameters available: 560 mm
- Permissible motor operating temperatures:
  50° C bis +60° C (50 Hz)
  -50°C bis +40° C (60 Hz)
- With built-in protector to be connected on site
- 400 ±10% V-3~, 50/60 Hz
- Protection class IP54
- Insulation class F
- Standard: 50 Pa external pressure
- Version V1.60: 100 Pa external pressure
- Operating data can be found with Küba Select or in the technical data
- Hinged fan unit available as a variant
- Controller:

	Standard	V1.60
Phase control	☑	☑
Transformer	☑	☑
Delta/star	☑	☑
Frequency converter	☐	☑

Please observe the manufacturer's information!

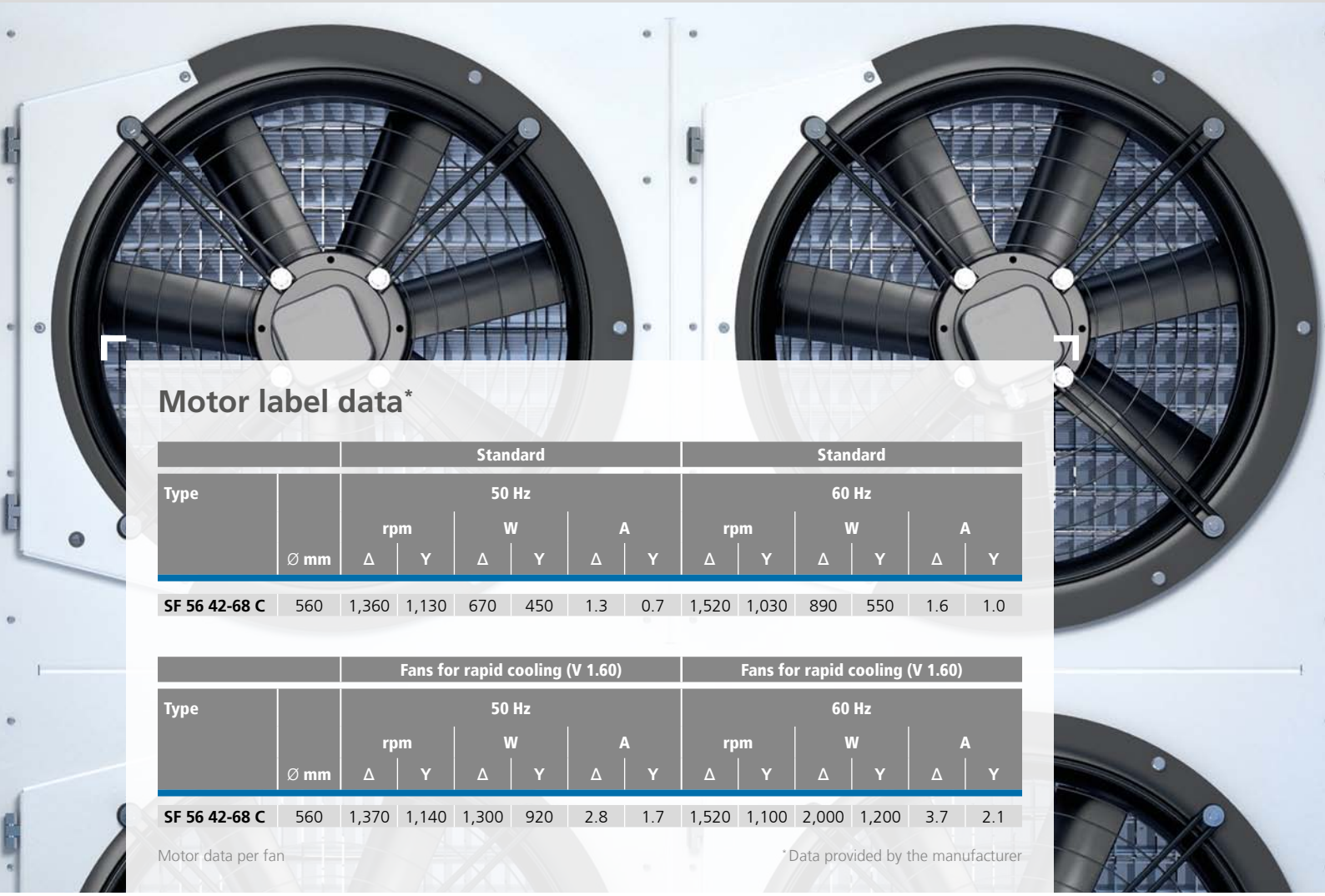

Motor label data*

		Standard						Standard					
Type		50 Hz						60 Hz					
		rpm		W		A		rpm		W		A	
	Ø mm	Δ	Y	Δ	Y	Δ	Y	Δ	Y	Δ	Y	Δ	Y
SF 56 42-68 C	560	1,360	1,130	670	450	1.3	0.7	1,520	1,030	890	550	1.6	1.0

		Fans for rapid cooling (V 1.60)						Fans for rapid cooling (V 1.60)					
Type		50 Hz						60 Hz					
		rpm		W		A		rpm		W		A	
	Ø mm	Δ	Y	Δ	Y	Δ	Y	Δ	Y	Δ	Y	Δ	Y
SF 56 42-68 C	560	1,370	1,140	1,300	920	2.8	1.7	1,520	1,100	2,000	1,200	3.7	2.1

Motor data per fan

* Data provided by the manufacturer

Küba SF *blastfreezer*

Technical data (Standard) – SFB(E)











Type	Rating Q_0 at 50 Hz. DT1. R404A		Cooling surface	Air flow	Air speed	Tube volume	Connections		Sound	Fans (Operational values at 50 Hz)				
	SC3	SC4					Inlet	Outlet	L_{WA}	Blade	Current	Per Fan		
	kW	kW	m^2	m^3/h	m/s	dm^3	Ø mm	Ø mm	db(A)	Ø mm	230 ± 10% V-1 50 Hz	rpm	W	A
SFB 56-F42 C	14.0	11.3	77.2	13,000	2.8	20.1	15x1.0	35x1.5	89	560	400 V-3	1,360	710	1.41
SFB 56-F62 C	18.0	14.5	115.4	12,320	2.7	30.0	22x1.0	42x1.5	89	560	400 V-3	1,360	710	1.41
SFB 56-F44 C	28.1	22.6	154.4	26,000	2.8	38.0	22x1.0	42x1.5	92	560	400 V-3	1,360	710	1.41
SFB 56-F64 C	36.0	29.0	230.8	24,640	2.7	57.3	28x1.5	54x2.0	92	560	400 V-3	1,360	710	1.41
SFB 56-F66 C	53.8	43.3	346.2	36,960	2.7	81.8	2 x 22x1.0	2 x 42x1.5	95	560	400 V-3	1,360	710	1.41
SFB 56-F68 C	70.3	56.8	461.6	49,280	2.7	109.2	2 x 22x1.0	2 x 54x2.0	98	560	400 V-3	1,360	710	1.41

Subject to modification.

Küba SF *blastfreezer*

Technical data (Standard) – SFK(E)











Type	Rating Q_0 at 50 Hz. DT1. R404A		Cooling surface	Air flow	Air speed	Tube volume	Connections		Sound	Fans (Operational values at 50 Hz)				
	SC3	SC4					Inlet	Outlet	L_{WA}	Blade	Current	Per Fan		
	kW	kW	m^2	m^3/h	m/s	dm^3	Ø mm	Ø mm	db(A)	Ø mm	230 ± 10% V-1 50 Hz	rpm	W	A
SFK 56-F42 C	11.7	9.4	55.6	13,300	2.9	20.1	15x1.0	35x1.5	89	560	400 V-3	1,360	710	1.41
SFK 56-F62 C	15.7	12.7	83.1	13,060	2.8	30.0	22x1.0	42x1.5	89	560	400 V-3	1,360	710	1.41
SFK 56-F44 C	23.5	18.9	111.2	26,600	2.9	38.0	22x1.0	42x1.5	92	560	400 V-3	1,360	710	1.41
SFK 56-F64 C	31.6	25.4	166.2	26,120	2.8	57.3	28x1.5	54x2.0	92	560	400 V-3	1,360	710	1.41
SFK 56-F66 C	47.1	38.0	249.3	39,180	2.8	81.8	2 x 22x1.0	2 x 42x1.5	95	560	400 V-3	1,360	710	1.41
SFK 56-F68 C	62.0	50.0	332.4	52,240	2.8	109.2	2 x 22x1.0	2 x 54x2.0	98	560	400 V-3	1,360	710	1.41

Subject to modification.

Küba SF *blastfreezer*

Technical data (Standard) – SFL(E)











Type	Rating Q_0 at 50 Hz. DT1. R404A		Cooling surface	Air flow	Air speed	Tube volume	Connections		Sound	Fans (Operational values at 50 Hz)				
	SC3	SC4					Inlet	Outlet	L_{WA}	Blade	Current	Per Fan		
	kW	kW	m^2	m^3/h	m/s	dm^3	Ø mm	Ø mm	db(A)	Ø mm	230 ± 10% V-1 50 Hz	rpm	W	A
SFL 56-F42 C	10.3	8.3	47.2	13,520	2.9	20.1	15x1.0	35x1.5	89	560	400 V-3	1,360	710	1.41
SFL 56-F62 C	14.0	11.3	70.5	13,260	2.9	30.0	22x1.0	42x1.5	89	560	400 V-3	1,360	710	1.41
SFL 56-F44 C	20.7	16.6	94.4	27,040	2.9	38.0	22x1.0	42x1.5	92	560	400 V-3	1,360	710	1.41
SFL 56-F64 C	28.1	22.6	141.1	26,520	2.9	57.3	28x1.5	54x2.0	92	560	400 V-3	1,360	710	1.41
SFL 56-F66 C	42.0	33.9	211.6	39,780	2.9	81.8	2 x 22x1.0	2 x 42x1.5	95	560	400 V-3	1,360	710	1.41
SFL 56-F68 C	55.4	44.7	282.2	53,040	2.9	109.2	2 x 22x1.0	2 x 54x2.0	98	560	400 V-3	1,360	710	1.41

Subject to modification.

Standard condition	t_{L1}	t_0	DT1
NB3/SC3	-18	-25	7
NB4/SC4	-25	-31	6

Correction factors for other refrigerants

Refrigerant	NB3/SC3	NB4/SC4
R134a	0.91	-
R507	0.97	0.97
R22	0.95	0.95

Küba SF *blastfreezer*

Technical data (V1.60) – SFB (E)











Type	Rating Q_0 at 50 Hz. DT1. R404A		Cooling surface	Air flow	Air speed	Tube volume	Connections		Sound	Fans (Operational values at 50 Hz)				
	SC3	SC4					Inlet	Outlet	L_{WA}	Blade	Current	Per Fan		
	kW	kW	m^2	m^3/h	m/s	dm^3	Ø mm	Ø mm	db (A)	Ø mm	230 ± 10% V-1 50 Hz	rpm	W	A
SFB 56-F42 C	14.4	10.8	77.2	16,000	3.5	20.1	15 x 1.0	35 x 1.5	89	560	400 V-3	1,370	1210	2.89
SFB 56-F62 C	19.0	14.3	115.4	15,000	3.3	30.0	22 x 1.0	42 x 1.5	89	560	400 V-3	1,370	1210	2.89
SFB 56-F44 C	29.3	22.0	154.4	32,000	3.5	38.0	22 x 1.0	42 x 1.5	92	560	400 V-3	1,370	1210	2.89
SFB 56-F64 C	38.6	29.2	230.8	30,000	3.3	57.3	28 x 1.5	54 x 2.0	92	560	400 V-3	1,370	1210	2.89
SFB 56-F66 C	56.7	42.6	346.2	45,000	3.3	81.8	2 x 22 x 1.0	2 x 42 x 1.5	95	560	400 V-3	1,370	1210	2.89
SFB 56-F68 C	68.9	50.6	461.6	60,000	3.3	109.2	2 x 22 x 1.0	2 x 54 x 2.0	98	560	400 V-3	1,370	1210	2.89

Subject to modification.

2 4 6 8

Küba SF *blastfreezer*

Technical data (V1.60) – SFK (E)











Type	Rating Q_0 at 50 Hz. DT1. R404A		Cooling surface	Air flow	Air speed	Tube volume	Connections		Sound	Fans (Operational values at 50 Hz)				
	SC3	SC4					Inlet	Outlet	L_{WA}	Blade	Current	Per Fan		
	kW	kW	m^2	m^3/h	m/s	dm^3	Ø mm	Ø mm	db (A)	Ø mm	230 ± 10% V-1 50 Hz	rpm	W	A
SFK 56-F42 C	12.7	9.6	55.6	17,080	3.7	20.1	15 x 1.0	35 x 1.5	89	560	400 V-3	1,370	1210	2.89
SFK 56-F62 C	17.1	12.9	83.1	16,140	3.5	30.0	22 x 1.0	42 x 1.5	89	560	400 V-3	1,370	1210	2.89
SFK 56-F44 C	25.8	19.4	111.2	34,160	3.7	38.0	22 x 1.0	42 x 1.5	92	560	400 V-3	1,370	1210	2.89
SFK 56-F64 C	34.6	26.3	166.2	32,280	3.5	57.3	28 x 1.5	54 x 2.0	92	560	400 V-3	1,370	1210	2.89
SFK 56-F66 C	51.0	38.6	249.3	48,420	3.5	81.8	2 x 22 x 1.0	2 x 42 x 1.5	95	560	400 V-3	1,370	1210	2.89
SFK 56-F68 C	63.1	46.8	332.4	64,560	3.5	109.2	2 x 22 x 1.0	2 x 54 x 2.0	98	560	400 V-3	1,370	1210	2.89

Subject to modification.

2 4 6 8

Küba SF *blastfreezer*

Technical data (V1.60) – SFL (E)











Type	Rating Q_0 at 50 Hz. DT1. R404A		Cooling surface	Air flow	Air speed	Tube volume	Connections		Sound	Fans (Operational values at 50 Hz)				
	SC3	SC4					Inlet	Outlet	L_{WA}	Blade	Current	Per Fan		
	kW	kW	m^2	m^3/h	m/s	dm^3	Ø mm	Ø mm	db (A)	Ø mm	230 ± 10% V-1 50 Hz	rpm	W	A
SFL 56-F42 C	11.3	8.5	47.2	17,340	3.8	20.1	15 x 1.0	35 x 1.5	89	560	400 V-3	1,370	1210	2.89
SFL 56-F62 C	15.5	11.7	70.5	16,540	3.6	30.0	22 x 1.0	42 x 1.5	89	560	400 V-3	1,370	1210	2.89
SFL 56-F44 C	22.9	17.3	94.4	34,680	3.8	38.0	22 x 1.0	42 x 1.5	92	560	400 V-3	1,370	1210	2.89
SFL 56-F64 C	31.2	23.8	141.1	33,080	3.6	57.3	28 x 1.5	54 x 2.0	92	560	400 V-3	1,370	1210	2.89
SFL 56-F66 C	46.1	35.0	211.6	49,620	3.6	81.8	2 x 22 x 1.0	2 x 42 x 1.5	95	560	400 V-3	1,370	1210	2.89
SFL 56-F68 C	57.8	43.2	282.2	66,160	3.6	109.2	2 x 22 x 1.0	2 x 54 x 2.0	98	560	400 V-3	1,370	1210	2.89

Subject to modification.

2 4 6 8

Standard condition	t_{L1}	t_0	DT1
NB3/SC3	-18	-25	7
NB4/SC4	-25	-31	6

Correction factors for other refrigerants

Refrigerant	NB3/SC3	NB4/SC4
R134a	0.91	-
R507	0.97	0.97
R22	0.95	0.95

Küba SF *blastfreezer*

Dimensions, weights, electric defrost, drain

Type	Dimensions												Drain
	H_{min}	H_{max}	B	T	$T_{(V1.60)}$	L	E_1	E_2	E_3	W_{min}	$W_{min\ (V1.60)}$	$W_{min\ (V3.10)}$	D
	mm	mm	mm	mm	mm	mm	mm	mm	mm	mm	mm	mm	inch
SF 56-42 C	1,813	1,963	1,210	836	805	755	854	-	-	400	400	650	G 1¼
SF 56-62 C	1,813	1,963	1,210	836	805	755	854	-	-	400	400	650	G 1¼
SF 56-44 C	1,813	1,963	2,010	836	805	755	1,654	-	-	400	400	650	G 1¼
SF 56-64 C	1,813	1,963	2,010	836	805	755	1,654	-	-	400	400	650	G 1¼
SF 56-66 C	1,813	1,963	2,810	836	805	755	2,454	800	-	400	400	650	G 1¼
SF 56-68 C	1,813	1,963	3,610	836	805	755	3,254	800	2,400	400	400	650	G 1¼

Type	Electrical defrost 230 V-1 / 400 V-3-Y				Weights (net)			Weights (gross)		
	Coil	Tray	Total	Circuits	SFB	SFK	SFL	SFB	SFK	SFL
	kW	kW	kW	n	kg	kg	kg	kg	kg	kg
SF 56-42 C	8.6	1.7	10.3	3	168	163	159	204	199	195
SF 56-62 C	12.9	1.7	14.6	3	200	192	187	236	228	223
SF 56-44 C	14.4	2.9	17.2	3	287	276	269	339	328	321
SF 56-64 C	21.5	2.9	24.4	3	346	330	320	398	382	372
SF 56-66 C	30.0	4.0	34.0	3	497	473	457	569	545	529
SF 56-68 C	40.8	5.2	46.0	3	669	637	616	761	729	708

Wall clearance and height-adjustable floor brackets

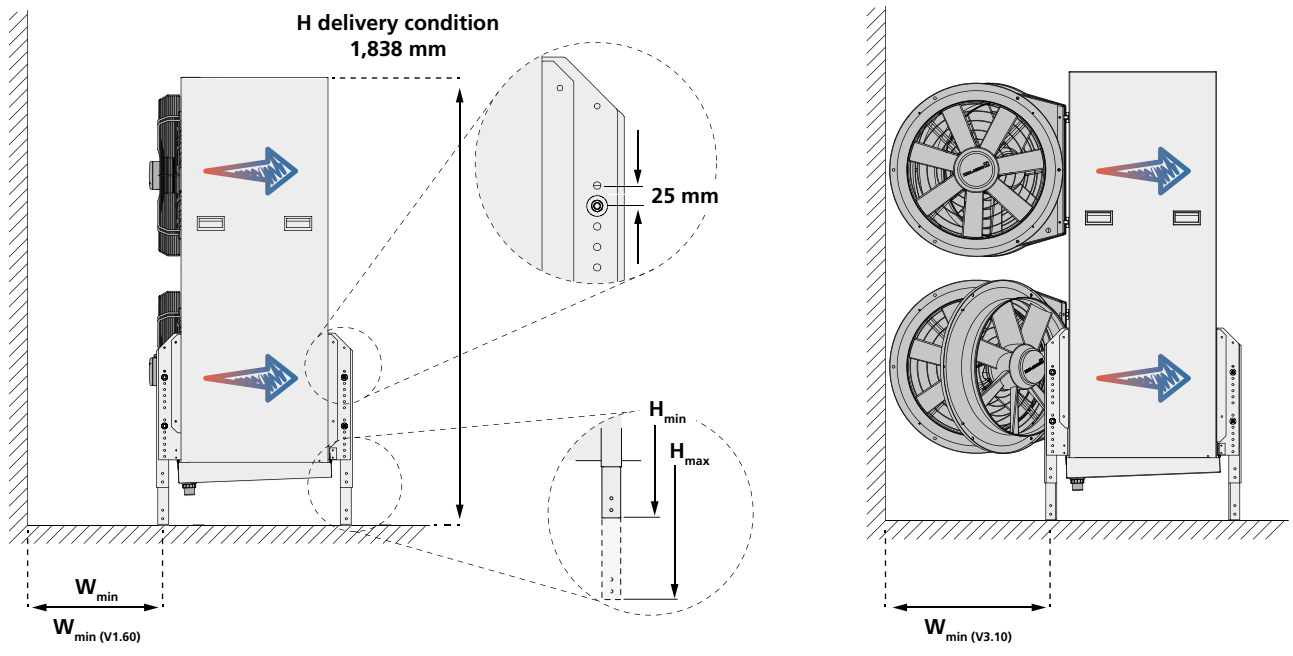

Küba SF *blastfreezer*

Dimensional drawings

Dimensional drawings Küba SF *blastfreezer* (2-8 motors)

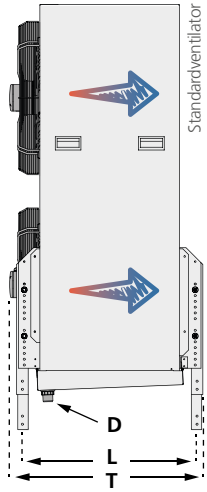

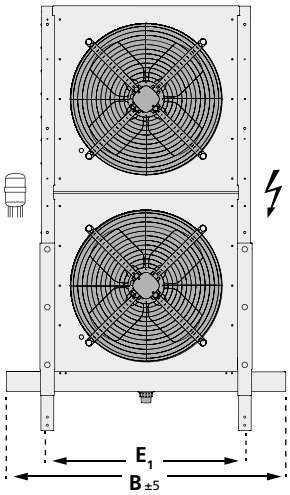

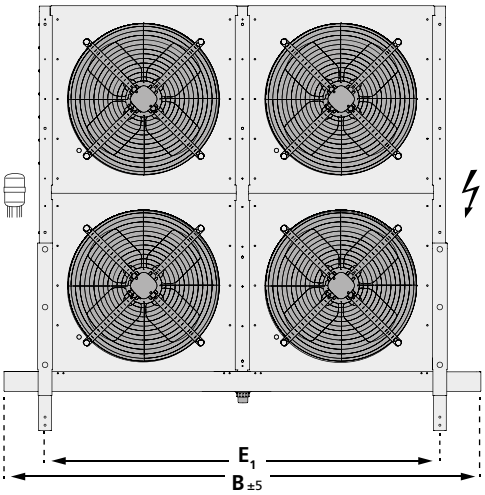

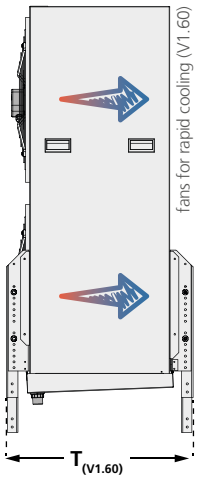

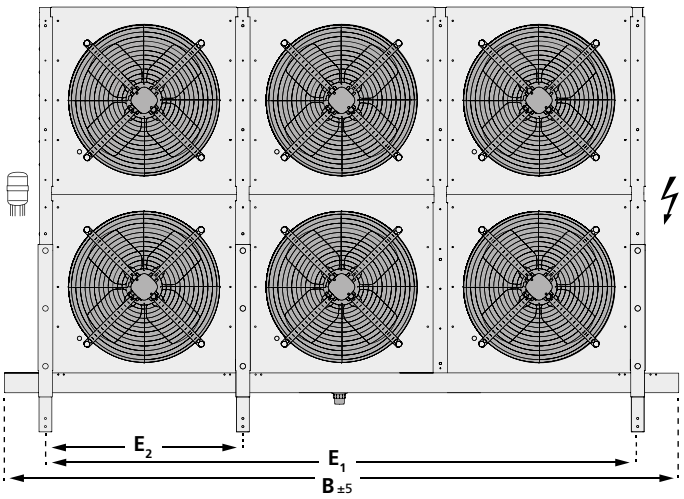

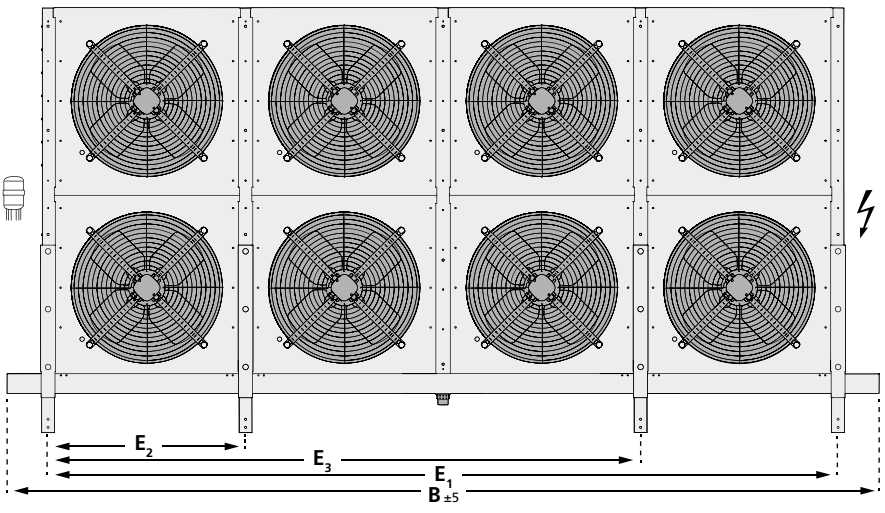

Küba SF *blastfreezer*

Variants

Motor-Variants

V 1.60 Fans for rapid cooling

Fans for high external pressure (100 Pa)
400 V±10% V-3

Construction-Variants

V 3.10 Fans hinged

For easy cleaning of the units, the fans swivel on stainless steel hinges.

Protection against corrosion

V 3.12 Stainless steel casing

Special protection from salts (no chlorine) and organic acids in the cold room air

V 6.01 Corrosion protection 1

Tubing: Copper (NH3 units = stainless steel)
Fins: Aluminum, epoxy-resin-coated
End plates: Aluminum protective coating
Casing: Aluminum/zinc coated steel, protective coating on both sides

V 6.02 Corrosion protection 2

Tubing: Stainless steel (V2A)
Fins: Aluminum, epoxy-resin-coated
End plates: Stainless steel
Casing: Aluminum/zinc coated steel, protective coating on both sides
Stainless steel CAL® distributor upon request

V 6.03 Corrosion protection 3

Tubing: Stainless steel (V2A)
Fins: Aluminum
End plates: Aluminum
Casing: Aluminum/zinc coated steel, protective coating on on one side
Stainless steel CAL® distributor upon request

V 6.04 Corrosion protection 4

Tubing: Copper (NH3 units = stainless steel)
Fins: Aluminum, epoxy-resin-coated
End plates: Aluminum
Casing: Aluminum/zinc coated steel, protective coating on on one side

CO_2-Variants

V 7.45 CO_2-Direct expansion

up to 45 bar operating pressure

V 7.60 CO_2-Direct expansion

up to 60 bar operating pressure

Accessories

Side cover hoods

Construction:

- Sendzimir galvanised steel
- High-grade powder coating, papyrus white RAL 9018
- The cover hoods can be used with all models.

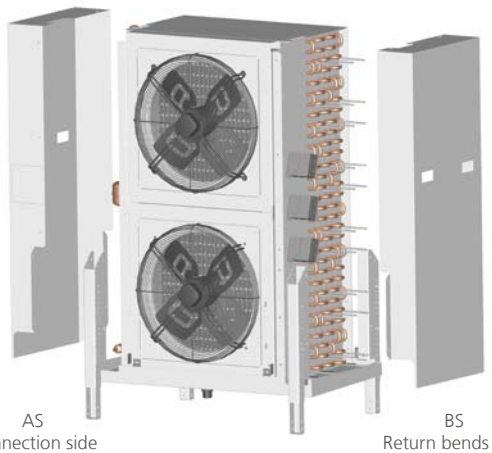

AS
Connection side

BS
Return bends side

Küba SF *blastfreezer*

Notes

www.brand-change.com

GEA Küba GmbH

Kühler Weg 1 · 82065 Baierbrunn · Deutschland
Tel.: ++49(0)89/744 73-0 · Fax: ++49(0)89/744 73-107
kueba@gea.com · www.kueba.de

© Copyright 2015 GEA Küba GmbH · 0094.392BR.SFC.EN · Status as of 08/2015
Subject to technical changes