CHANGING
GEA HEAT EXCHANGERS

Mounting guide

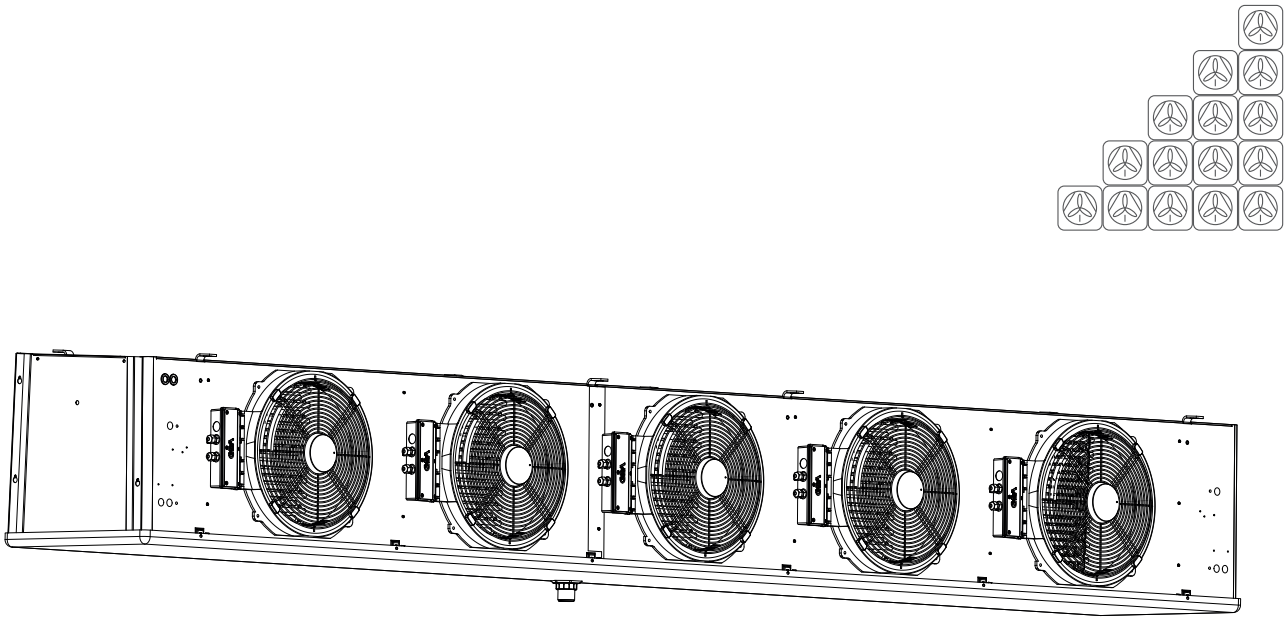

Küba *market* SP

Mounting guide
Page 2-4

- Dimensions
- Weights
- Assembly

Electrical wiring
Page 5-19

- Motor wiring diagram
- Electrical defrost wiring diagram
- Cabling

market SP

Dimensions

Weights

Type	H ±5	W ±5	D ±5	L ±5	F ±3
SP	mm	mm	mm	mm	mm
23-F21/31	351	760	400	335	140
30-F21/31	427	960	425	360	170
35-F21/31/41	505	1130	607	515	200
45-F31/41	657	1330	613	510	200
45-F51/71	662	1330	573	470	200
23-F32	351	1210	400	335	140
30-F22/32	427	1550	425	360	170
35-F22/32/42	505	1830	607	515	200
45-F32/42	657	2230	613	510	200
45-F52/72	662	2230	573	470	200
23-F33	351	1660	400	335	140
30-F23/33	427	2140	425	360	170
35-F23/33/43	505	2530	607	515	200
45-F33/43	657	3130	613	510	200
45-F53/73	662	3130	573	470	200
23-F34	351	2110	400	335	140
30-F24/34	427	2730	425	360	170
35-F24/34/44	505	3230	607	515	200
45-F34/44	657	4030	613	510	200
45-F54/74	662	4030	573	470	200
SP 35-F45	505	3930	607	515	200
-	-	-	-	-	-
-	-	-	-	-	-
-	-	-	-	-	-
-	-	-	-	-	-

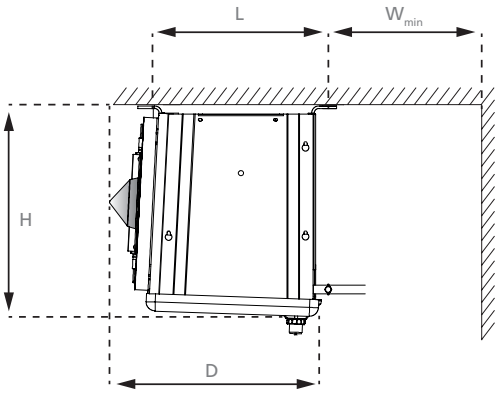

Type	E1 ±5	E2 ±5	E3 ±5	Weight	
SP	mm	mm	mm	kg	
				net	gross
23-F21/31	480	-	-	12 / 13	16 / 17
30-F21/31	620	-	-	19 / 21	24 / 26
35-F21/31/41	730	-	-	30 / 32 / 35	36 / 39 / 42
45-F31/41	930	-	-	47 / 52	81 / 86
45-F51/71	930	-	-	62 / 68	95 / 101
23-F32	930	-	-	21	26
30-F22/32	1210	-	-	32 / 35	58 / 61
35-F22/32/42	1430	-	-	50 / 56 / 61	87 / 92 / 97
45-F32/42	1830	-	-	86 / 93	169 / 175
45-F52/72	1830	-	-	109 / 121	191 / 204
23-F33	1380	450	-	29	62
30-F23/33	1800	590	-	45 / 49	83 / 86
35-F23/33/43	2130	700	-	70 / 78 / 86	153 / 161 / 168
45-F33/43	2730	900	-	128 / 138	263 / 273
45-F53/73	2730	900	-	163 / 179	298 / 313
23-F34	1830	900	-	38	105
30-F24/34	2390	1180	-	59 / 63	150 / 153
35-F24/34/44	2830	1400	-	93 / 103 / 114	220 / 231 / 241
45-F34/44	3630	1800	-	166 / 179	331 / 345
45-F54/74	3630	1800	-	213 / 235	378 / 400
SP 35-F45	3530	1400	2100	143	301
-	-	-	-	-	-
-	-	-	-	-	-
-	-	-	-	-	-
-	-	-	-	-	-

Assembly

1

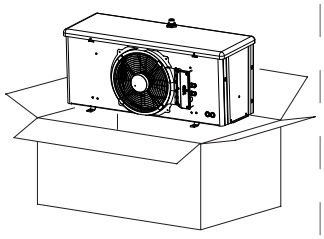

SP 23 - F21 / F31
SP 30 - F21 / F31
SP 35 - F21 / F31 / F41

SP 23 - F32

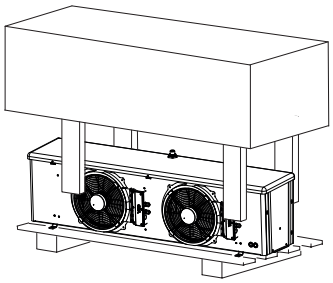

SP 45 - F31 / F41 / F51 / F71

SP 30 - F22 / F32
SP 35 - F22 / F32 / F42

SP 23 - F33
SP 30 - F23 / F33

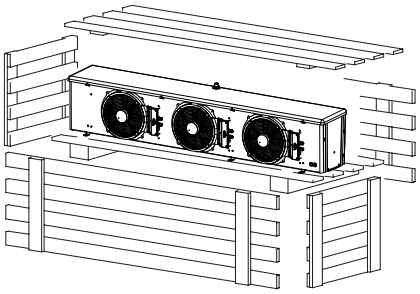

SP 45 - F32 / F42 / F52 / F72

SP 35 - F23 / F33 / F43
SP 45 - F33 / F43 / F53 / F73

SP 23 - F34
SP 30 - F24 / F34
SP 35 - F24 / F34 / F44
SP 45 - F34 / F44 / F54 / F74

SP 35 - F45

2

2.1

2.2

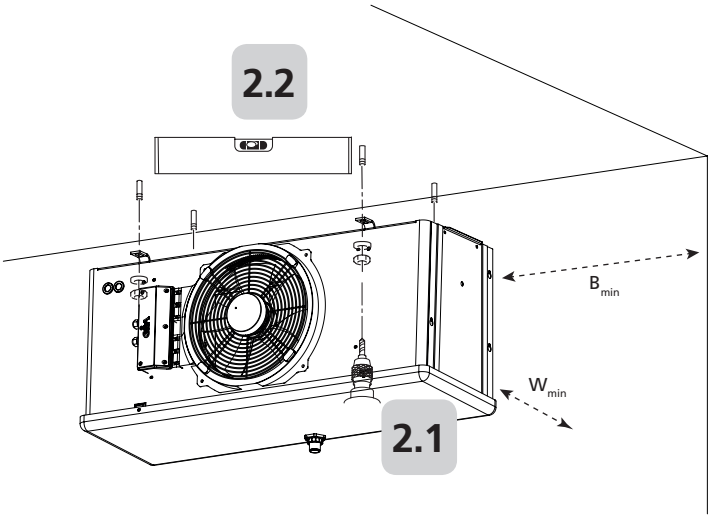

B_{min}= distance revision heater

SP	[mm]	
	B_{min}	W_{min}
SPA/B 23-F21	630	200
SPA/B 23-F31	630	200
SPA/B 30-F21	785	200
SPA/B 30-F31	785	200
SPA/B 35-F21	865	300
SPA/B 35-F31	865	300
SPA/B 35-F41	925	300
SPA/B 45-F31	1060	400
SPA/B 45-F41	1100	400
SPA/B 45-F51	1085	400
SPA/B 45-F71	1130	400
SPA/B 23-F32	1080	200
SPA/B 30-F22	1335	200
SPA/B 30-F32	1335	200
SPA/B 35-F22	1665	300
SPA/B 35-F32	1665	300
SPA/B 35-F42	1600	300
SPA/B 45-F32	2040	400
SPA/B 45-F42	1975	400
SPA/B 45-F52	1960	400
SPA/B 45-F72	2050	400

SP	[mm]	
	B_{min}	W_{min}
SPA/B 23-F33	1500	200
SPA/B 30-F23	1935	200
SPA/B 30-F33	1935	200
SPA/B 35-F23	2315	300
SPA/B 35-F33	2315	300
SPA/B 35-F43	2275	300
SPA/B 45-F33	2935	400
SPA/B 45-F43	2885	400
SPA/B 45-F53	3000	400
SPA/B 45-F73	2925	400
SPA/B 23-F34	1950	200
SPA/B 30-F24	2535	200
SPA/B 30-F34	2535	200
SPA/B 35-F24	3015	300
SPA/B 35-F34	3035	300
SPA/B 35-F44	2975	300
SPA/B 45-F34	3750	400
SPA/B 45-F44	3750	400
SPA/B 45-F54	3750	400
SPA/B 45-F74	3750	400
SPA/B 35-F45	3750	300

3

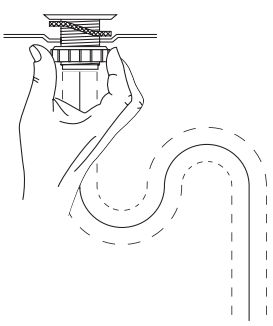

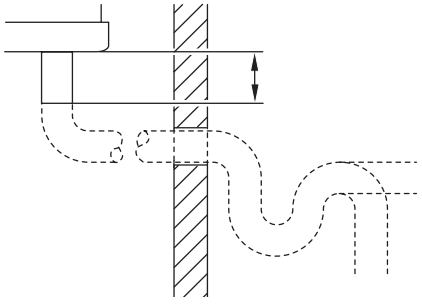

SP	
SP23 - F21/31	G ¾
SP30 - F21/31	G ¾
SP35 - F21/31/41	G ¾
SP45 - F31/41/51/71	G ¾
SP23 - F32	G ¾
SP30 - F22/32	G ¾
SP35 - F22/32/42	G 1¼
SP45 - F32/42/52/72	G 1¼

SP	
SP23 - F33	G ¾
SP30 - F23/33	G ¾
SP35 - F23/33/43	G 1¼
SP45 - F33/43/53/73	G 1¼
SP23 - F34	G ¾
SP30 - F24/34	G 1¼
SP35 - F24/34/44	G 1¼
SP45 - F34/44/54/74	G 1¼
SP35 - F45	G 1¼

Assembly

4
4.1
4.2
4.3
4.4
4.5
4.6
4.7

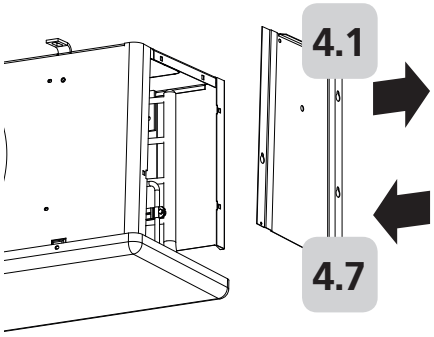

SP	ø mm	ø mm
SPA/B 23-F21	10	12
SPA/B 23-F31	10	12
SPA/B 30-F21	10	12
SPA/B 30-F31	10	18
SPA/B 35-F21	12	18
SPA/B 35-F31	12	22
SPA/B 35-F41	12	22
SPA/B 45-F31	15	28
SPA/B 45-F41	15	28
SPA/B 45-F51	15	28
SPA/B 45-F71	15	35
SPA/B 23-F32	10	18
SPA/B 30-F22	12	22
SPA/B 30-F32	12	22
SPA/B 35-F22	15	22
SPA/B 35-F32	15	28

SP	ø mm	ø mm
SPA/B 35-F42	15	28
SPA/B 45-F32	15	35
SPA/B 45-F42	15	35
SPA/B 45-F52	15	35
SPA/B 45-F72	22	42
SPA/B 23-F33	12	22
SPA/B 30-F23	15	22
SPA/B 30-F33	15	28
SPA/B 35-F23	15	28
SPA/B 35-F33	15	35
SPA/B 35-F43	15	35
SPA/B 45-F33	22	42
SPA/B 45-F43	22	42
SPA/B 45-F53	22	42
SPA/B 45-F73	22	42

SP	ø mm	ø mm
SPA/B 23-F34	15	22
SPA/B 30-F24	15	28
SPA/B 30-F34	15	28
SPA/B 35-F24	15	35
SPA/B 35-F34	15	35
SPA/B 35-F44	22	35
SPA/B 45-F34	22	42
SPA/B 45-F44	28	42
SPA/B 45-F54	28	54
SPA/B 45-F74	28	54
SPA/B 35-F45	22	42

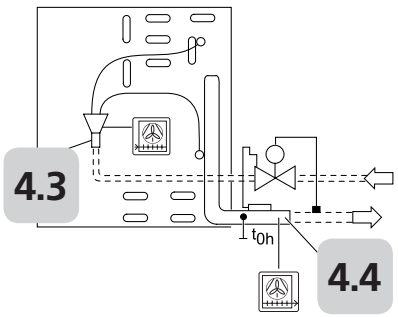

SPA/B 35-F21	12	18
SPA/B 35-F31	12	22
SPA/B 35-F41	12	22
SPA/B 45-F31	15	28
SPA/B 45-F41	15	28
SPA/B 45-F51	15	28
SPA/B 45-F71	15	35
SPA/B 30-F22	12	22
SPA/B 30-F32	12	22
SPA/B 35-F22	15	22
SPA/B 35-F32	15	28
SPA/B 35-F42	15	28
SPA/B 45-F32	15	35

SPA/B 45-F42	15	35
SPA/B 45-F52	15	35
SPA/B 45-F72	22	42
SPA/B 23-F33	12	22
SPA/B 30-F23	15	22
SPA/B 30-F33	15	28
SPA/B 35-F23	15	28
SPA/B 35-F33	15	35
SPA/B 35-F43	15	35
SPA/B 45-F33	22	42
SPA/B 45-F43	22	42
SPA/B 45-F53	22	42
SPA/B 45-F73	22	42

SPA/B 23-F34	15	22
SPA/B 30-F24	15	28
SPA/B 30-F34	15	28
SPA/B 35-F24	15	35
SPA/B 35-F34	15	35
SPA/B 35-F44	22	35
SPA/B 45-F34	22	42
SPA/B 45-F44	28	42
SPA/B 45-F54	28	54
SPA/B 45-F74	28	54
SPA/B 35-F45	22	42

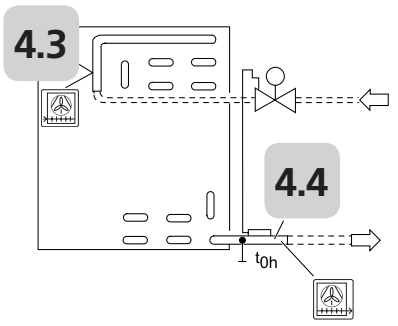

SPA/B 23-F21	10	12
SPA/B 23-F31	10	12
SPA/B 30-F21	10	12
SPA/B 30-F31	10	18
SPA/B 23-F32	10	18

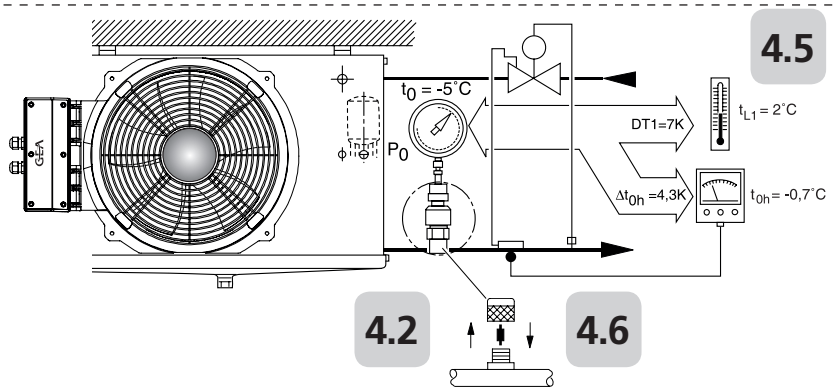

$\Delta t_{0h} \cong 0.5 \ldots 0.7 \times DT1$

DT1 10K ≅ Δt_{0h} 6.1 K
DT1 9K ≅ Δt_{0h} 5.5 K
DT1 8K ≅ Δt_{0h} 4.9 K
DT1 7K ≅ Δt_{0h} 4.3 K
DT1 6K ≅ Δt_{0h} 3.7 K
DT1 5K ≅ Δt_{0h} 3.1 K
DT1 4K ≅ Δt_{0h} 2.5 K

Electrical wiring

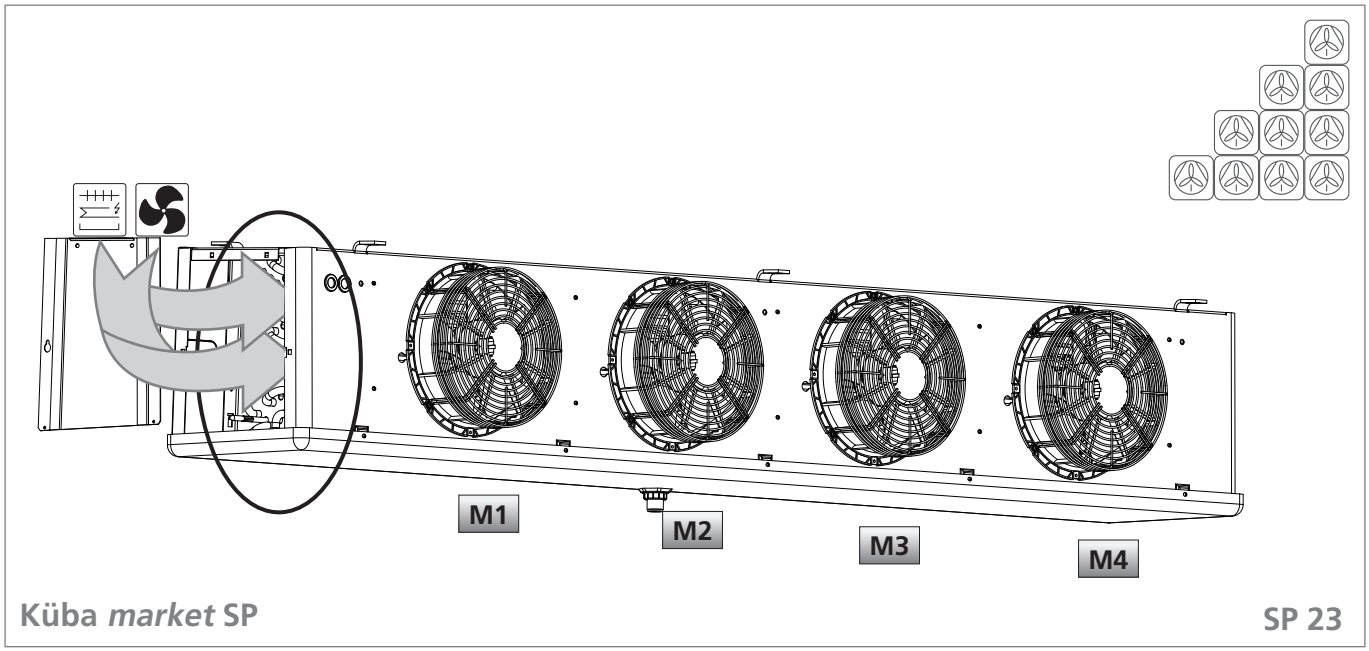

Küba *market* SP

SP 23

Motor

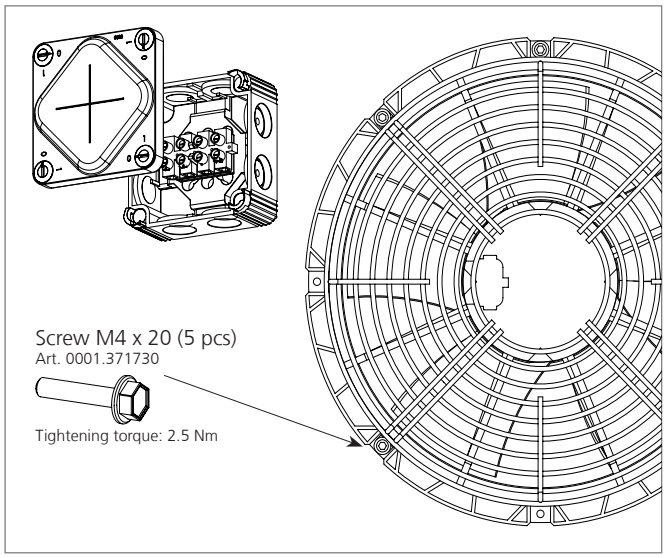

Electrical defrost

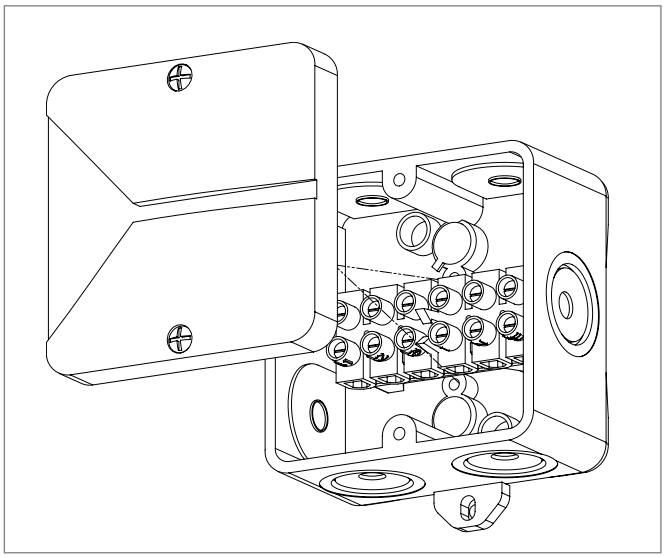

market SP

Electrical wiring

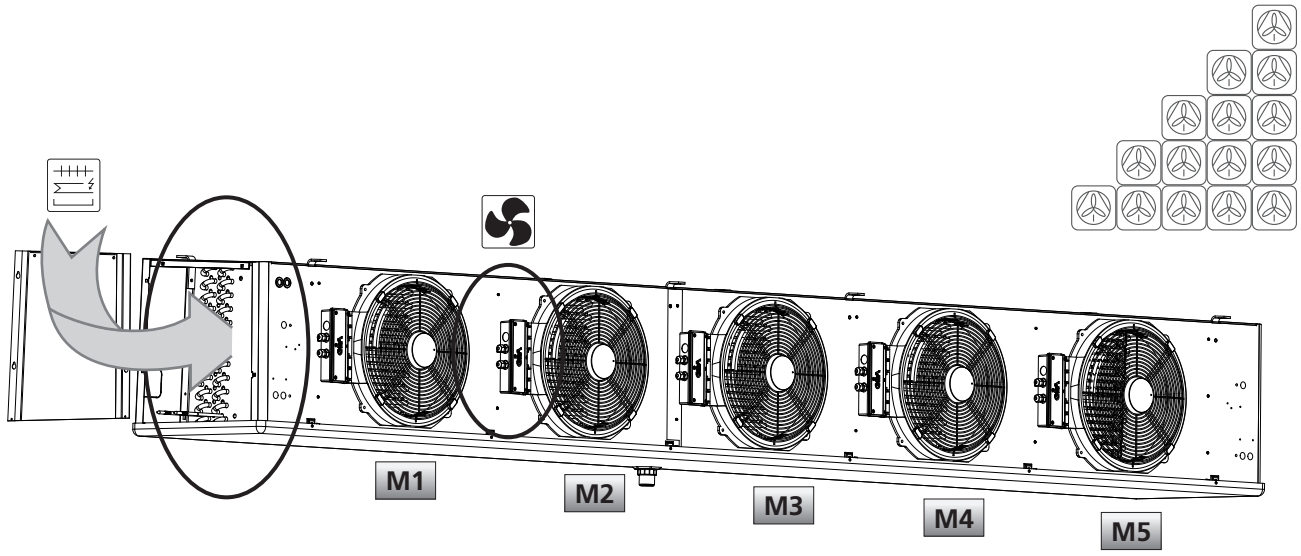

Küba *market* SP

SP 30, 35, 45

Motor

Screw M6x20 (4 pcs each)
Art. 0001.371724

Tightening torque: 2.5 Nm

Screw M5x25 (4 pcs each)
Art. 0001.371731

PA6

Tightening torque: 2.5 Nm

Use original screws ONLY!

Screw M5x30 (6 pcs each)
Art. 0001.371732
For SG 45 only!

Tightening torque: 2.5 Nm

Screw for cover (6 pcs each)
Tightening torque: 2.5 Nm

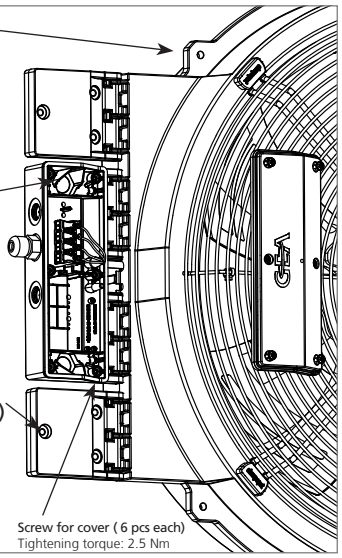

SP 23
SP 30
SP 35

SP 45-
31,41
32,42
33,43
34,44

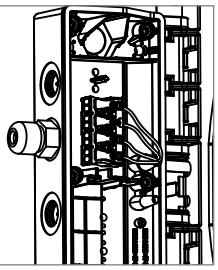

SP 45-

51,71
52,72
53,73
54,74

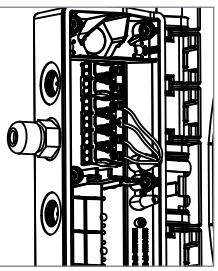

Electrical defrosting

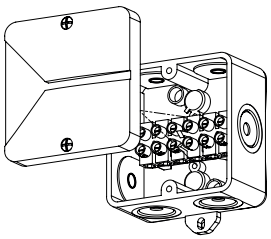

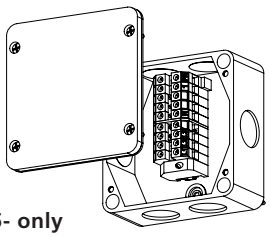

SP 45- only
34,44,51,71,52,72,53,73,54,74

market SP

Motor wiring diagram

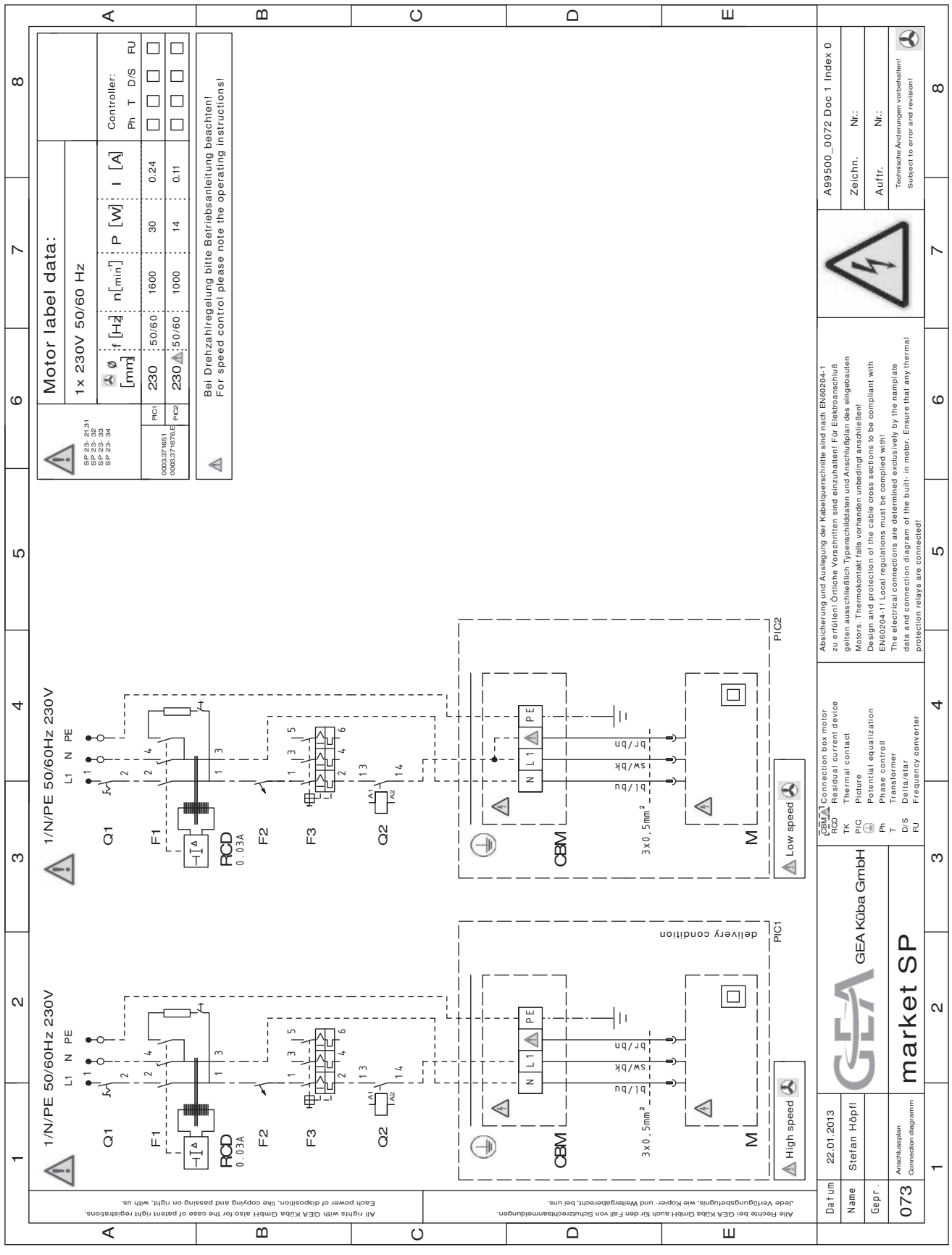

Motor wiring diagram

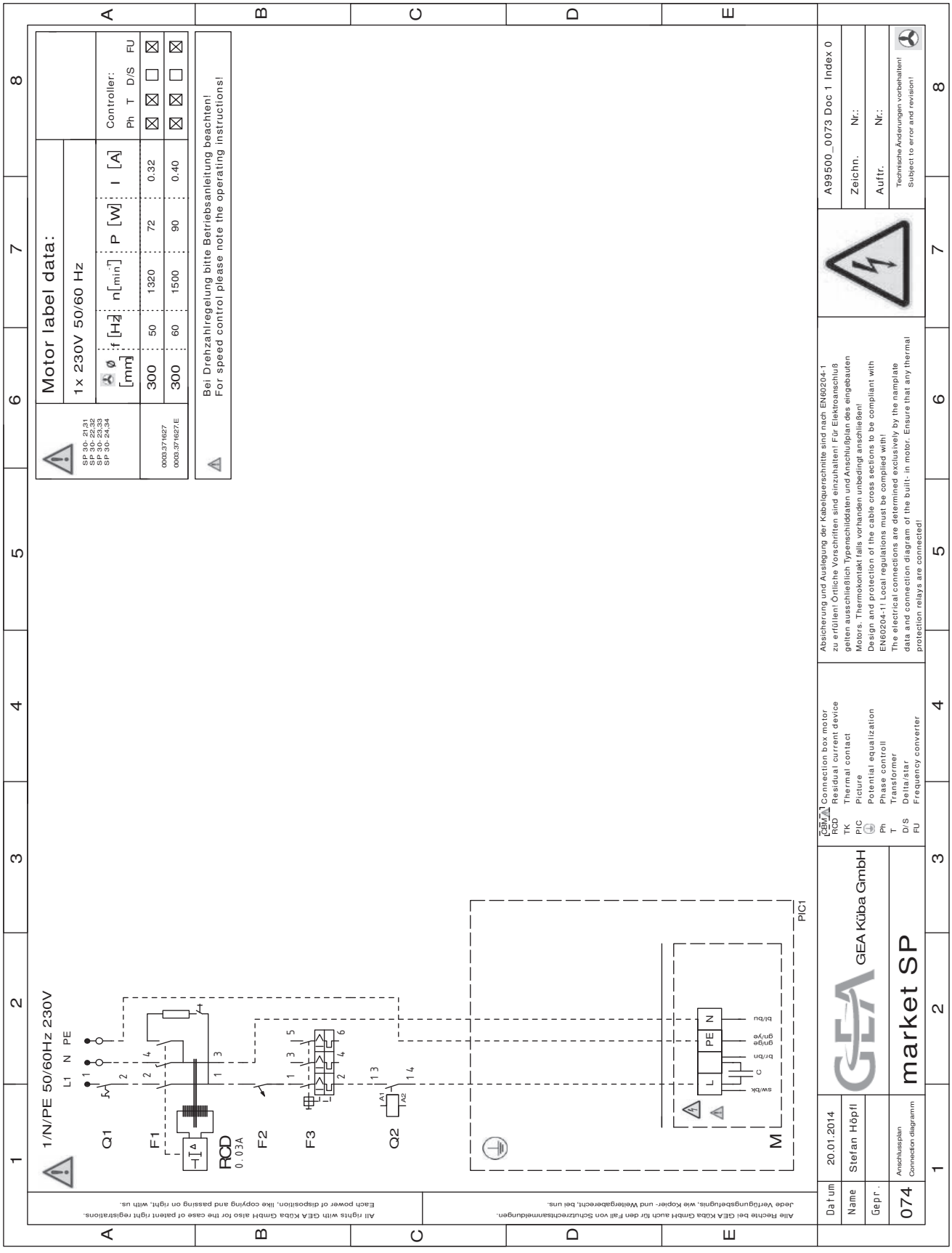

Motor wiring diagram

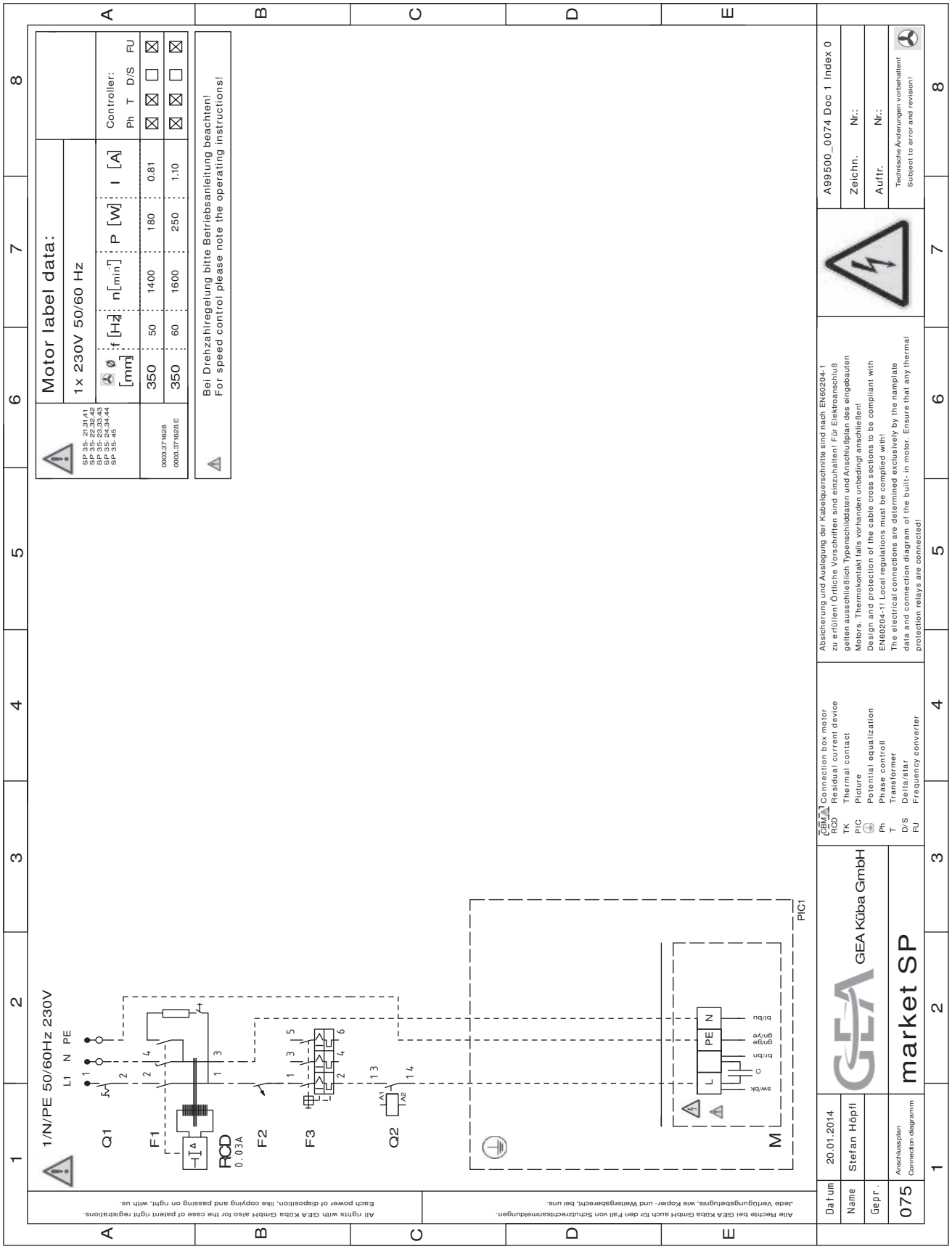

Motor wiring diagram

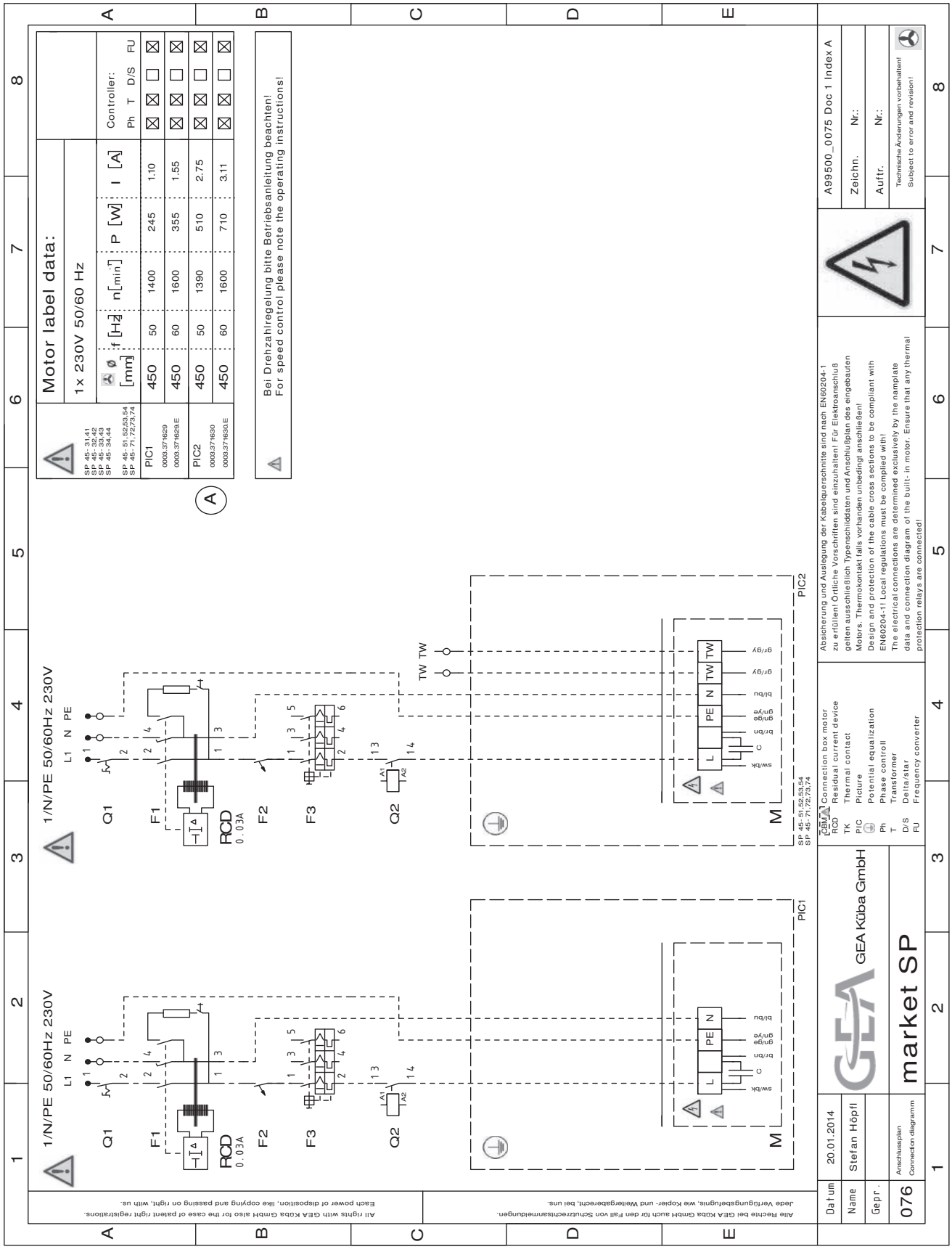

Electrical defrost wiring diagram

PIC 1

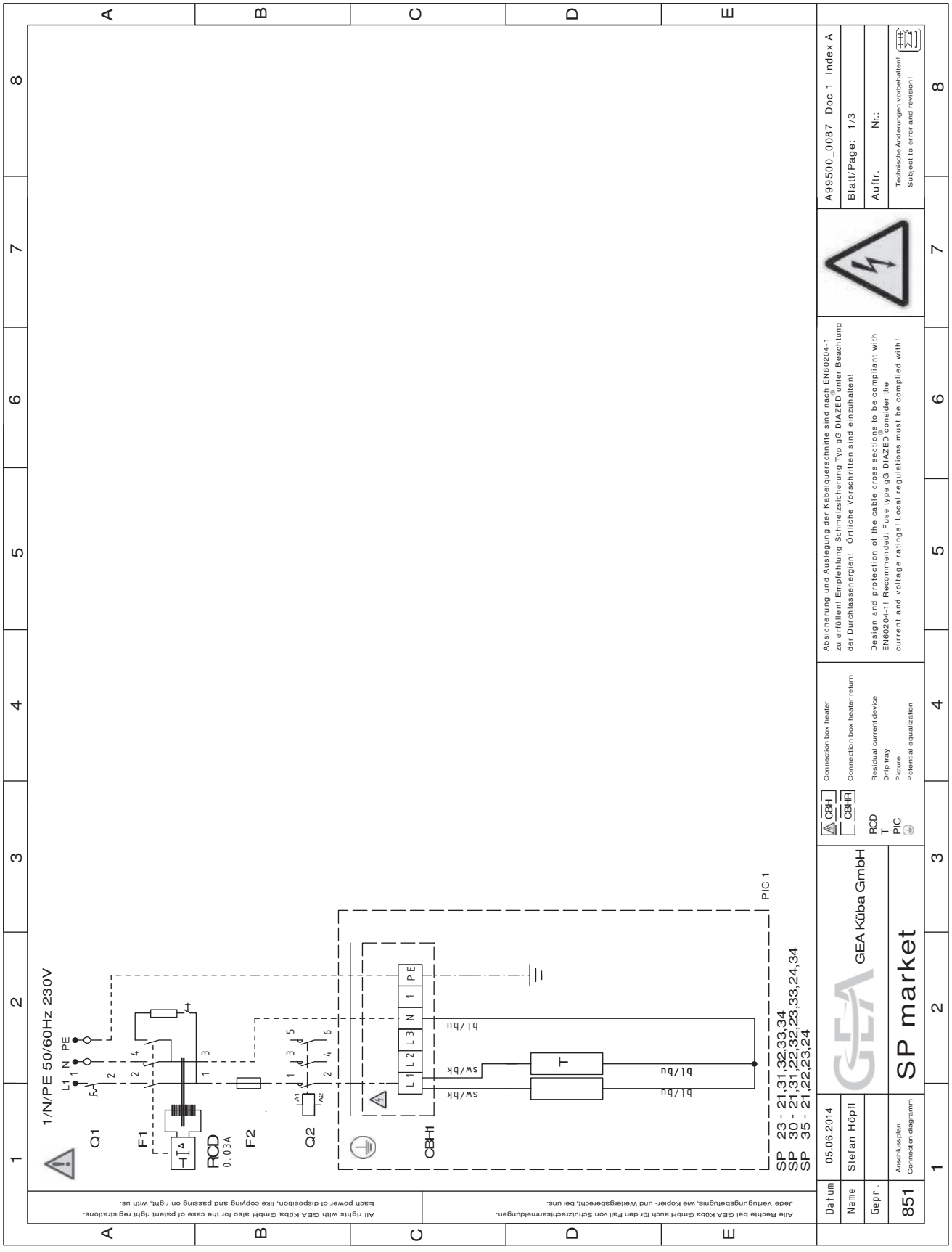

Electrical defrost wiring diagram

PIC 2.3

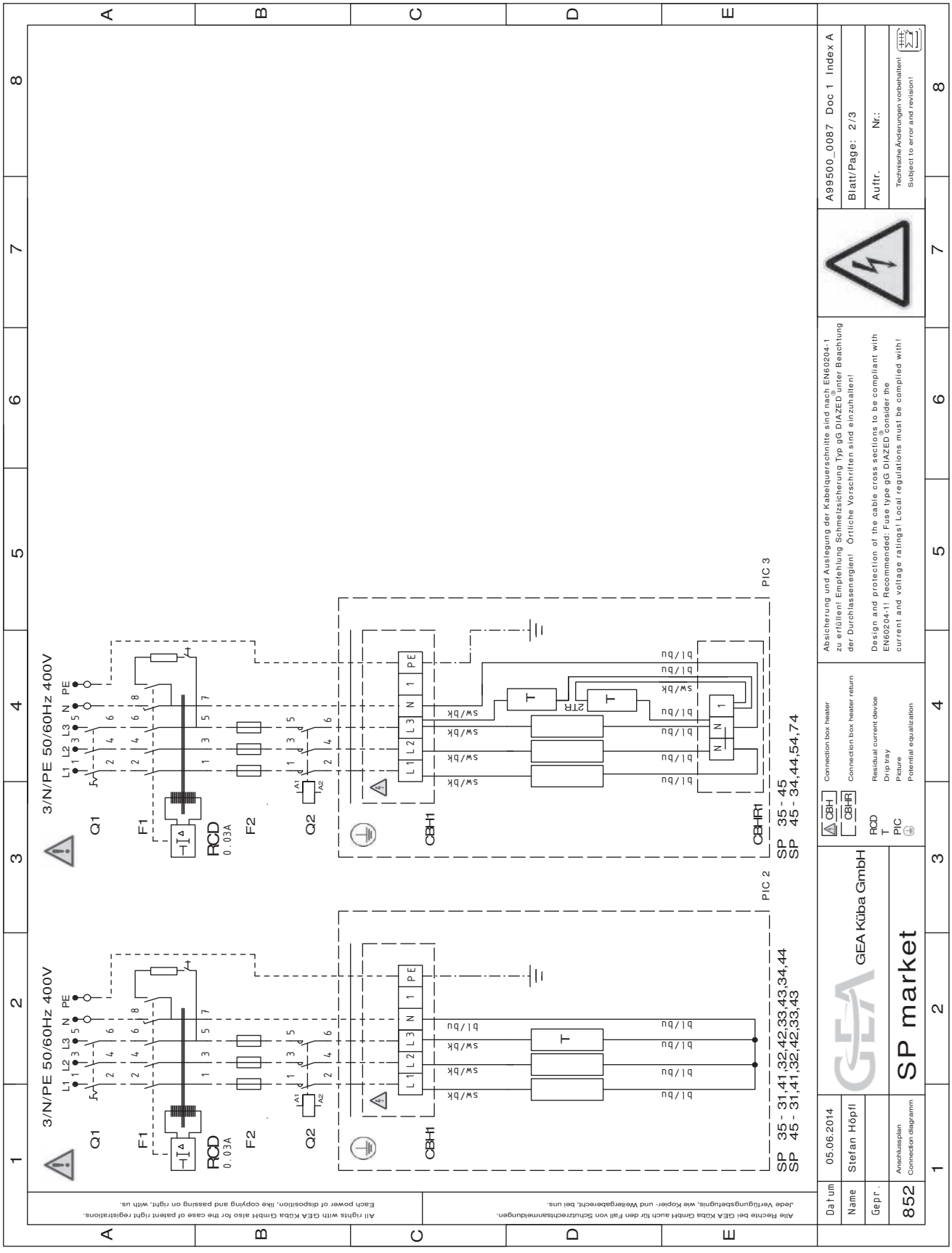

Electrical defrost wiring diagram

PIC 4.5

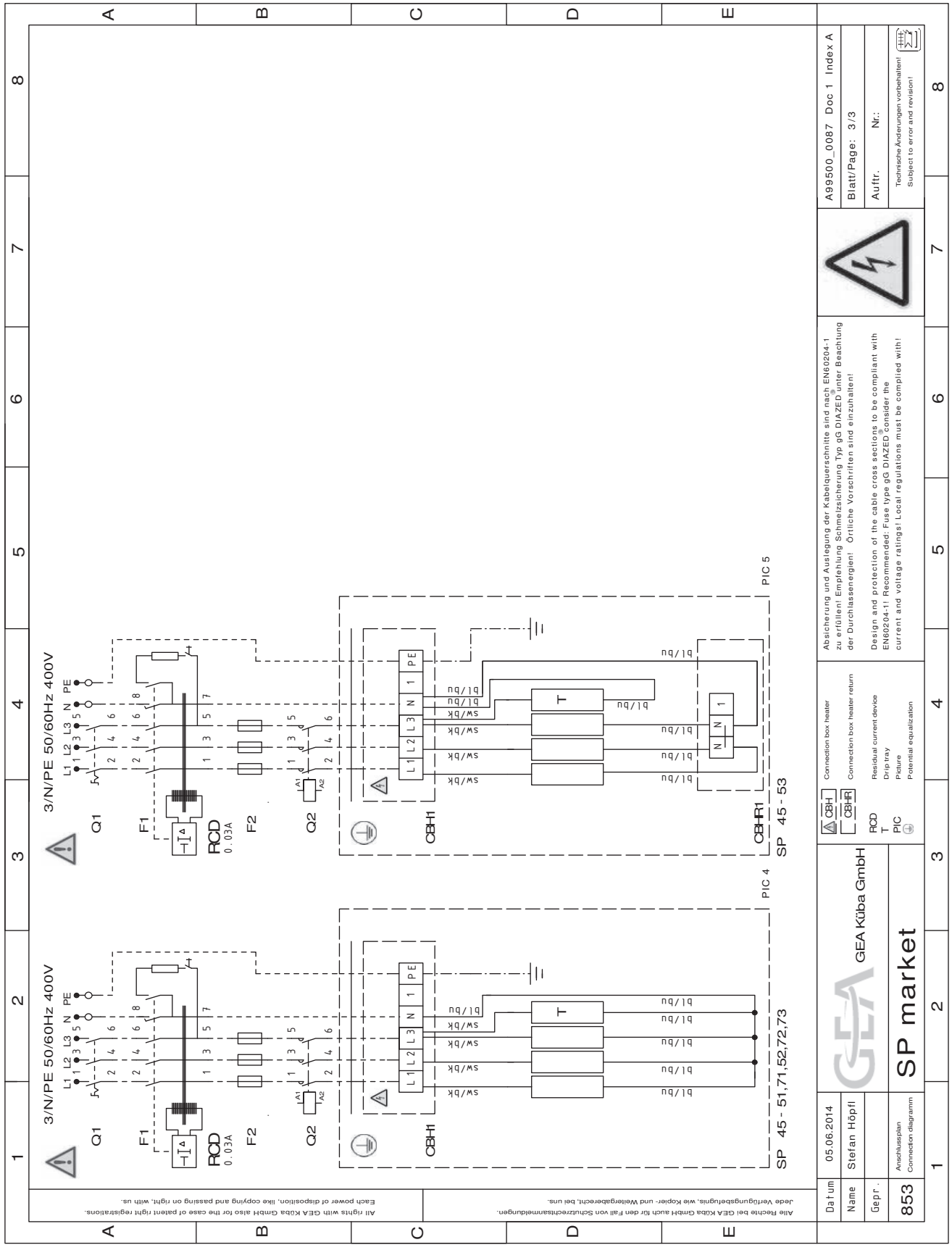

Cabling

market SP

Standard/Series

Wiring diagram number: A99500_0087 (Doc 2; Index A)

Type		Coil heating element				Drip tray heating element (D)								L1		
SPAE SPBE	Finned length	Number	Length	Capacity P	Form	Number	Length	Capacity P	Form	Total Capacity of all heating circuits	Total number of all heating circuits	Heating circuit no.	**PIC on the wiring diagram**	Number of heating elements, coil	Number of heating elements, drip tray D	Number of heating elements, drip tray D (R)
Type	L [mm]	[pcs]	L [mm]	P [W]		TW [pcs]	L [mm]	P [W]		P [kW]	[pcs]	[Nb]		[pcs]	[pcs]	[pcs]
SPAE SPBE	Finned length															
23-21	450	1	1350	480	U114	1	1200	420	U100	0.9	1	CBH1	1	1	1T	
23-31	450	1	1350	480	U114	1	1200	420	U100	0.9	1	CBH1	1	1	1T	
23-32	900	1	2250	860	U114	1	2100	765	U100	1.6	1	CBH1	1	1	1T	
23-33	1350	1	3100	1145	U114	1	3100	1145	U100	2.3	1	CBH1	1	1	1T	
23-34	1800	1	4000	1490	U114	1	4000	1490	U100	3.0	1	CBH1	1	1	1T	

Standard/Series

Wiring diagram number: A99500_0087 (Doc 2; Index A)

Type		Coil heating element				Drip tray heating element (D)								L1		
SPAE SPBE	Finned length	Number	Length	Capacity P	Form	Number	Length	Capacity P	Form	Total capacity of all heating circuits	Total number of all heating circuits	Heating circuit no.	**PIC on the wiring diagram**	Number of heating elements, coil	Number of heating elements, drip tray D	Number of heating elements, drip tray D (R)
Type	L [mm]	[pcs]	L [mm]	P [W]		TW [pcs]	L [mm]	P [W]		P [kW]	[pcs]	[Nb]		[pcs]	[pcs]	[pcs]
SPAE SPBE	Finned length															
30-21	590	1	1700	615	U152	1	1700	615	U100	1.2	1	CBH1	1	1	1 T	
30-31	590	1	1700	615	U152	1	1700	615	U100	1.2	1	CBH1	1	1	1 T	
30-22	1180	1	2800	1035	U152	1	2800	1035	U100	2.1	1	CBH1	1	1	1 T	
30-32	1180	1	2800	1035	U152	1	2800	1035	U100	2.1	1	CBH1	1	1	1 T	
30-23	1770	1	4000	1490	U152	1	4000	1490	U100	3.0	1	CBH1	1	1	1 T	
30-33	1770	1	4000	1490	U152	1	4000	1490	U100	3.0	1	CBH1	1	1	1 T	
30-24	2360	1	5200	1950	U152	1	5200	1950	U100	3.9	1	CBH1	1	1	1 T	
30-34	2360	1	5200	1950	U152	1	5200	1950	U100	3.9	1	CBH1	1	1	1 T	

CBH connection box
Heater
Heating circuit

CBHR connection box
Heater return
Heating circuit return

L2			L3													
Number of heating elements, coil	Number of heating elements, drip tray D	Number of heating elements, drip tray D (R)	Number of heating elements, coil	Number of heating elements, drip tray D	Number of heating elements, drip tray D (R)	Total Capacity of heating circuit P	Current L1	Current L2	Current L3	Recommended cable cross-section for supply line (building-side)	SKS	Junction box Conn. box with earthing cable	Heating circuit no.	Junction box connection box	Minimum cable cross-section for return	Cable length for parts list
[pcs]	[pcs]	[pcs]	[pcs]	[pcs]	[pcs]	P [kW]	I [A]	I [A]	I [A]	min [mm²]	[Size]	CBH	[Nb]	CBHR	min [mm²]	[m]
												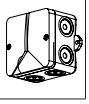		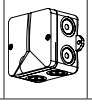		
						0.9	3.9	0.0	0.0	2.5	3	ABO025				
						0.9	3.9	0.0	0.0	2.5	3	ABO025				
						1.6	7.1	0.0	0.0	2.5	3	ABO025				
						2.3	10.0	0.0	0.0	2.5	3	ABO025				
						3.0	13.0	0.0	0.0	2.5	3	ABO025				

CBH connection box
Heater
Heating circuit

CBHR connection box
Heater return
Heating circuit return

L2			L3													
Number of heating elements, coil	Number of heating elements, drip tray D	Number of heating elements, drip tray D (R)	Number of heating elements, coil	Number of heating elements, drip tray D	Number of heating elements, drip tray D (R)	Total Capacity of heating circuit P	Current L1	Current L2	Current L3	Recommended cable cross-section for supply line (building-side)	SKS	Junction box conn. box with earthing cable	Heating circuit no.	Junction box connection box	Minimum cable cross-section for return	Cable length for parts list
[pcs]	[pcs]	[pcs]	[pcs]	[pcs]	[pcs]	P [kW]	I [A]	I [A]	I [A]	min [mm²]	[Size]	CBH	[Nb]	CBHR	min [mm²]	[m]
												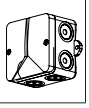		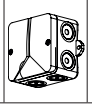		
						1.2	5.3	0.0	0.0	2.50	3	ABO025				
						1.2	5.3	0.0	0.0	2.50	3	ABO025				
						2.1	9.0	0.0	0.0	2.50	3	ABO025				
						2.1	9.0	0.0	0.0	2.50	3	ABO025				
						3.0	13.0	0.0	0.0	2.50	3	ABO025				
						3.0	13.0	0.0	0.0	2.50	3	ABO025				
						3.9	17.0	0.0	0.0	2.50	3	ABO025				
						3.9	17.0	0.0	0.0	2.50	3	ABO025				

market SP

Standard/Series

Wiring diagram number: A99500_0087 (Doc 2; Index A)

Type		Coil heating element				Drip tray heating element (D)								L1		
SPAE SPBE	Finned length	Number	Length	Capacity P	Form	Number	Length	Capacity P	Form	Total capacity of all heating circuits	Total number of all heating circuits	Heating circuit no.	**PIC on the wiring diagram**	Number of heating elements, coil	Number of heating elements, drip tray D	Number of heating elements, drip tray D (R)
Type	L [mm]	[pcs]	L [mm]	P [W]		TW [pcs]	L [mm]	P [W]		P [kW]	[pcs]	[Nb]		[pcs]	[pcs]	[pcs]
SPAE SPBE	Finned length															
35-21	700	1	1900	690	U190	1	2100	765	U150	1.5	1	CBH1	1	1	1 T	
35-31	700	2	1900	690	U190	1	2100	765	U150	2.1	1	CBH1	2	1		
35-41	700	2	1900	690	U66	1	2100	765	U150	2.1	1	CBH1	2	1		
35-22	1400	1	3500	1300	U190	1	3500	1300	U150	2.6	1	CBH1	1	1	1 T	
35-32	1400	2	3500	1300	U190	1	3500	1300	U150	3.9	1	CBH1	2	1		
35-42	1400	2	3250	1210	U66	1	3500	1300	U150	3.7	1	CBH1	2	1		
35-23	2100	1	4800	1800	U190	1	4800	1800	U150	3.6	1	CBH1	1	1	1 T	
35-33	2100	2	4800	1800	U190	1	4800	1800	U150	5.4	1	CBH1	2	1		
35-43	2100	2	4600	1720	U66	1	4800	1800	U150	5.2	1	CBH1	2	1		
35-24	2800	1	6200	2250	U190	1	6200	2250	U150	4.5	1	CBH1	1	1	1 T	
35-34	2800	2	6200	2250	U152	1	6200	2250	U150	6.8	1	CBH1	2	1		
35-44	2800	2	6000	2178	U66	1	6200	2250	U150	6.6	1	CBH1	2	1		
35-45	3500	4	3850	1435	L100	2	3850	1435	L100	6.5	1	CBH1	3	1		

	CBH connection box Heater Heating circuit												CBHR connection box Heater return Heating circuit return			
L2			L3													
Number of heating elements, coil	Number of heating elements, drip tray D	Number of heating elements, drip tray D (R)	Number of heating elements, coil	Number of heating elements, drip tray D	Number of heating elements, drip tray D (R)	Total Capacity of heating circuit P	Current L1	Current L2	Current L3	Recom-mended cable cross-section for supply line (building-side)	SKS	Junction box conn. box with earth-ing cable	Heating circuit no.	Junction box connection box	Minimum cable cross-section for return	Cable length for parts list
[pcs]	[pcs]	[pcs]	[pcs]	[pcs]	[pcs]	P [kW]	I [A]	I [A]	I [A]	min [mm²]	[Size]	CBH	[Nb]	CBHR	min [mm²]	[m]
						1.5	6.3	0.0	0.0	2.50	3	ABO025				
1				1 T		2.1	3.0	3.0	3.3	2.50	3	ABO025				
1				1 T		2.1	3.0	3.0	3.3	2.50	3	ABO025				
						2.6	11.3	0.0	0.0	2.50	4	ABO025				
1				1 T		3.9	5.7	5.7	5.7	2.50	4	ABO025				
1				1 T		3.7	5.3	5.3	5.7	2.50	3	ABO025				
						3.6	15.7	0.0	0.0	2.50	3	ABO025				
1				1 T		5.4	7.8	7.8	7.8	2.50	3	ABO025				
1				1 T		5.2	7.5	7.5	7.8	2.50	3	ABO025				
						4.5	19.6	0.0	0.0	2.50	3	ABO025				
1				1 T		6.8	9.8	9.8	9.8	2.50	3	ABO025				
1				1 T		6.6	9.5	9.5	9.8	2.50	3	ABO025				
2			1		2 D(R)	6.5	6.2	12.5	9.4	2.50	4	ABO025	CBHR1	ABO025	2.5	4.65

Cabling

market SP

Standard/Series **Wiring diagram number: A99500_0087** (Doc 2; Index A)															L1		
Type		Coil heating element				Drip tray heating element (D)							PIC **on the wiring diagram**				
SPAE SPBE	Finned length	Number	Length	Capacity P	Form	Number	Length	Capacity P	Form	Total Capacity of all heating circuits	Total number of all heating circuits	Heating circuit no.			Number of heating elements, coil	Number of heating elements, drip tray D	Number of heating elements, drip tray D (R)
Type	L [mm]	[pcs]	L [mm]	P [W]		TW [pcs]	L [mm]	P [W]		P [kW]	[pcs]	[Nb]			[pcs]	[pcs]	[pcs]
SPAE SPBE	Finned length																
45-31	900	2	2250	860	U152	1	2500	920	U200	2.6	1	CBH1	2		1		
45-41	900	3	2250	860	U66	1	2500	920	U200	3.5	1	CBH1	2		1		
45-51	900	4	2250	860	U99	1	2500	920	U200	4.4	1	CBH1	4		2		
45-71	900	5	2400	880	U165	1	2500	920	U200	5.3	1	CBH1	4		2		
45-32	1800	2	4250	1590	U190	1	4250	1590	U200	4.8	1	CBH1	2		1		
45-42	1800	3	4000	1490	U66	1	4250	1590	U200	6.1	1	CBH1	2		1		
45-52	1800	4	4000	1490	U99	1	4250	1590	U200	7.6	1	CBH1	4		2		
45-72	1800	5	4250	1590	U165	1	4250	1590	U200	9.5	1	CBH1	4		2		
45-33	2700	2	6000	2178	U152	1	6000	2178	U200	6.5	1	CBH1	2		1		
45-43	2700	3	5820	2165	U66	1	6000	2178	U200	8.7	1	CBH1	2		1		
45-53	2700	7	3100	1145	Z100/100	1	6000	2178	U200	10.2	1	CBH1	5		3		
45-73	2700	5	6000	2178	U165	1	6000	2178	U200	13.1	1	CBH1	4		2		
45-34	3600	5	3850	1435	L100	2	3850	1435	L100	7.9	1	CBH1	3		2		
45-44	3600	6	3850	1435	L100	2	3850	1435	L100	9.3	1	CBH1	3		2		
45-54	3600	7	3850	1435	L100	2	3850	1435	L100	10.8	1	CBH1	3		3		
45-74	3600	10	3850	1435	L100	2	3850	1435	L100	15.1	1	CBH1	3		4		

	CBH connection box Heater Heating circuit												CBHR connection box Heater return Heating circuit return			
L2			L3													
Number of heating elements, coil	Number of heating elements, drip tray D	Number of heating elements, drip tray D (R)	Number of heating elements, coil	Number of heating elements, drip tray D	Number of heating elements, drip tray D (R)	Total Capacity of heating circuit P	Current L1	Current L2	Current L3	Recom-mended cable cross-section for supply line (building-side)	SKS	Junction box conn. box with earth-ing cable	Heating circuit no.	Junction box connection box	Minimum cable cross-section for return	Cable length for parts list
[pcs]	[pcs]	[pcs]	[pcs]	[pcs]	[pcs]	P [kW]	I [A]	I [A]	I [A]	min [mm²]	[Size]	CBH	[Nb]	CBHR	min [mm²]	[m]
1				1 T		2.6	3.7	3.7	4.0	2.50	3	ABO025				
2				1 T		3.5	3.7	7.5	4.0	2.50	3	ABO025				
1			1	1 T		4.4	7.5	3.7	7.7	2.50	3	WK 060				
2			1	1 T		5.3	7.7	7.7	7.8	2.50	3	WK 060				
1				1 T		4.8	6.9	6.9	6.9	2.50	4	ABO025				
2				1 T		6.1	6.5	13.0	6.9	2.50	3	ABO025				
1			1	1 T		7.6	13.0	6.5	13.4	2.50	3	WK 060				
2			1	1 T		9.5	13.8	13.8	13.8	2.50	4	WK 060				
1				1 T		6.5	9.5	9.5	9.5	2.50	3	ABO025				
2				1 T		8.7	9.4	18.8	9.5	2.50	3	ABO025				
2			2	1 T		10.2	14.9	10.0	19.4	2.50	3	WK 060				
2			1	1 T		13.1	18.9	18.9	18.9	2.50	3	WK 060				
2			1		2 D(R)	7.9	12.5	12.5	9.4	2.50	3	WK 060	CBHR1	WK 060	2.5	4.75
2			2		2 D(R)	9.3	12.5	12.5	15.6	2.50	3	WK 060	CBHR1	WK 060	2.5	4.75
2			2		2 D(R)	10.8	18.7	12.5	15.6	2.50	3	WK 100	CBHR1	WK 100	2.5	4.75
3			3		2 D(R)	15.1	25.0	18.7	21.8	2.50	3	WK 100	CBHR1	WK 100	2.5	4.75

GEA Küba GmbH

Kühler Weg 1 · 82065 Baierbrunn · Germany
Tel.: +49 89/744 73-0 · Fax: +49 89/744 73-107
kueba@gea.com · www.kueba.com

© Copyright 2014 GEA Küba GmbH · 0001.392271 · Status 01/2015
Technical modifications reserved