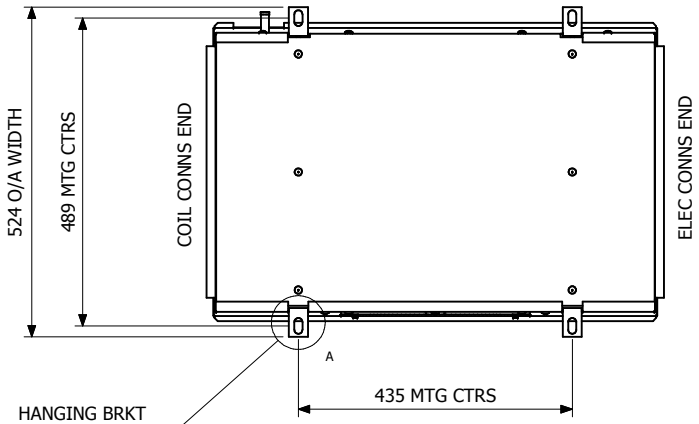

HANGING BRKT
DETAIL TYP.

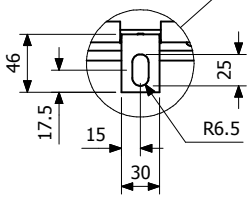

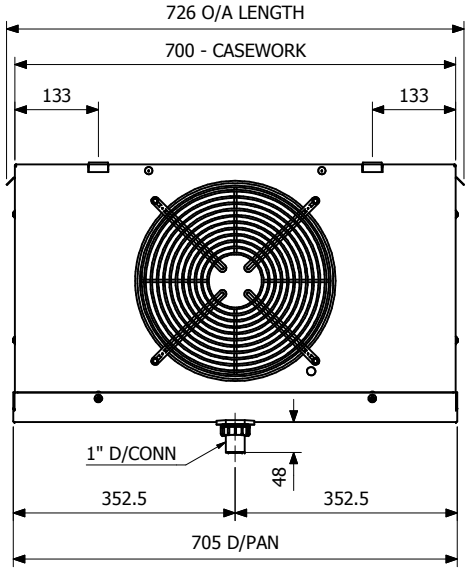

<---------------
HEATER REMOVAL
500mm (EITHER END)

MAINTENANCE ACCESS
REQUIRED BOTH ENDS
OF UNIT

CAUTION!
ISOLATE UNIT FROM ELECTRICAL
SUPPLY BEFORE UNDERTAKING
ANY MAINTENANCE WORK

DRY WEIGHTS (APPROX INC. HEATERS)			
UNIT	CU/AL	CU/AV	CU/CU
KEC10	27Kg	27Kg	33Kg
KEC15	28Kg	28Kg	34Kg

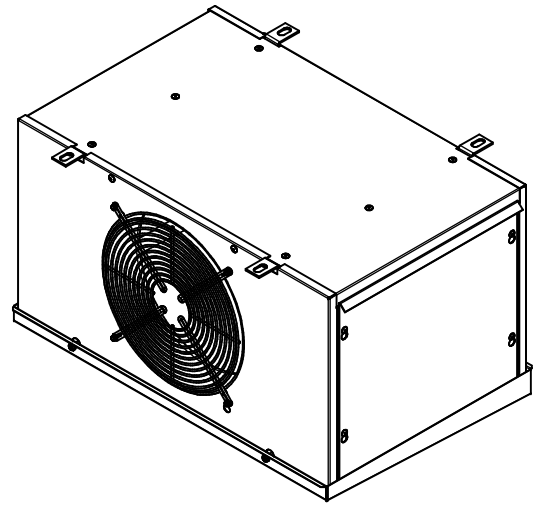

	CONNECTION SIZE TABLE					
	DX		GLYCOL		CO2	
UNIT	INLET	OUTLET	INLET	OUTLET	INLET	OUTLET
KEC10	1/2"St.	1/2"St.	1/2"St.	1/2"St.	1/2"St.	1/2"St.
KEC15	1/2"St.	1/2"St.	1/2"St.	1/2"St.	1/2"St.	1/2"St.

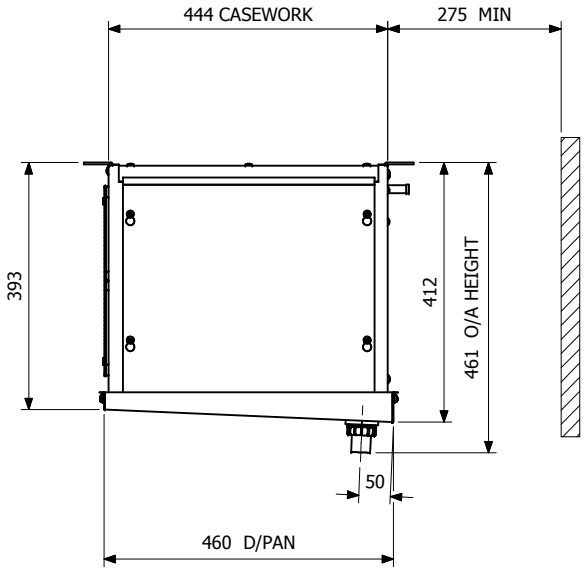

FANSET
ELEC SUPPLY 220/240V-1Ph-50-60Hz
KEC10 & 15:
231-9030-0121 - 35W - 1370RPM

STD ELECTRIC DEFROST (IF FITTED)
ELEC SUPPLY 220/240V-1Ph-50Hz
COIL BLOCK - 2 x HTR PAIRS 170W EACH
DRAIN PAN - 1 x HTR PAIR 170W EACH

ISSUE	MODIFICATION DETAILS	ECN No.	DATE	BY
9	NEW FAN ARRANGEMENT - SEPARATE FAN PLATE / TOP PLATE		14/03/2011	T_Bryant
8	NEW FAN ARRANGEMENT - ALL IN ONE FAN PLATE / TOP PLATE		14/02/2011	T_Bryant
7	GEA BORDER ADDED		24/02/2010	T_Bryant

REVISION HISTORY

THIRD ANGLE PROJECTION
Sheet Size A2
IF IN DOUBT ASK DO NOT SCALE

GEA Searle

© GEA Searle Ltd - All Rights Reserved
This document is protected by copyright, and the design it contains is protected by both copyright & design right, all such rights being owned by GEA Searle Ltd. This document may also contain information which is confidential to that Company. Neither this document nor the design or information which it contains may therefore be used, sold, licensed, transferred, copied, lent, disclosed to any third party or otherwise be reproduced in whole or in part an any manner or form than with the prior written consent of that Company.

Finish: RAL9010	Weight: N/A
Material:	
TOLERANCES - UNLESS OTHERWISE STATED Simple Assy's (max 3 Parts) ± 1.0mm Complex Assy's (multiple Parts) ± 3.0mm	Checked
CUSTOMER / PROJECT NO	Job No.
Description: GA KEC10 & 15 (CASE 400)	
Designed By: T_Bryant	Date: 14/02/2008
Drawn By: T_Bryant	Date: 14/04/2008
Part No. / 3D Model Ref.: KEC10	Sheet Number: 1 of 1
Drawing / File Ref: KEC10-15.idw	Issue: 9

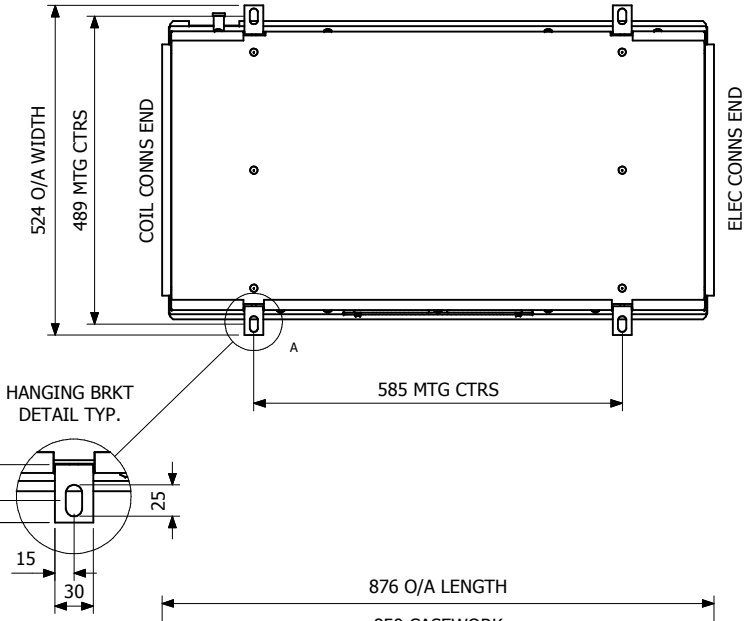

CAUTION!
ISOLATE UNIT FROM ELECTRICAL SUPPLY BEFORE UNDERTAKING ANY MAINTENANCE WORK

DRY WEIGHTS (APPROX INC. HTRS)			
UNIT	CU/AL	CU/AV	CU/CU
KEC20	33Kg	33Kg	40Kg
KEC25	33Kg	33Kg	40Kg
KEC30	35Kg	35Kg	46Kg

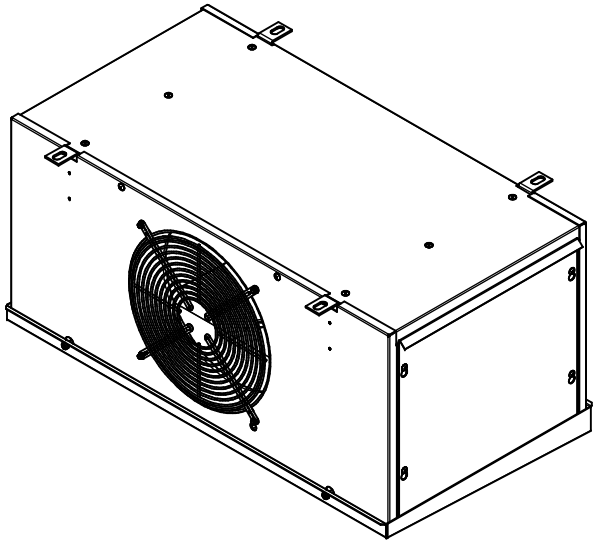

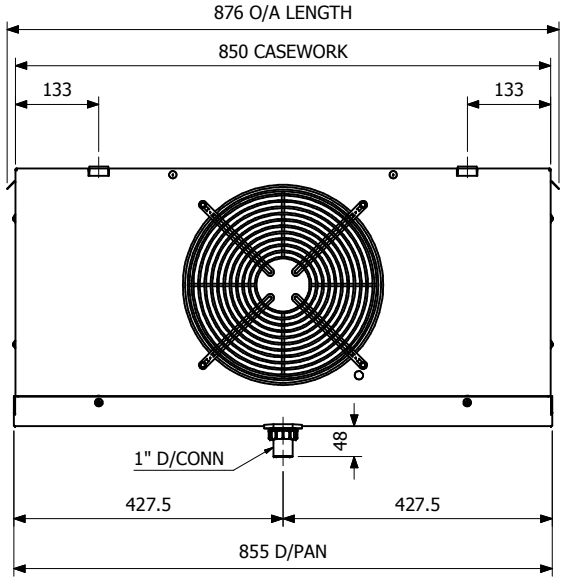

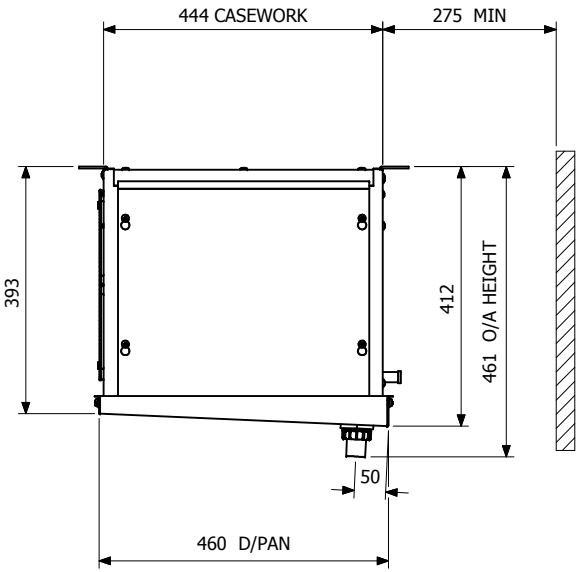

FANSET
ELEC SUPPLY 220/240V-1Ph-50-60Hz
KEC20:
231-9030-0121 - 35W - 1370RPM
KEC25 & 30:
231-9030-0321 - 73W - 1660RPM

STD ELECTRIC DEFROST (IF FITTED)
ELEC SUPPLY 220/240V-1Ph-50Hz
COIL BLOCK - 2 x HTR PAIRS 230W EACH
DRAINPAN - 1 x HTR PAIR 230W EACH

CONNECTION SIZE TABLE						
	DX		GLYCOL		CO2	
UNIT	INLET	OUTLET	INLET	OUTLET	INLET	OUTLET
KEC20	1/2"St.	5/8"St.	5/8"St.	5/8"St.	1/2"St.	1/2"St.
KEC25	1/2"St.	5/8"St.	5/8"St.	5/8"St.	1/2"St.	1/2"St.
KEC30	1/2"St.	5/8"St.	5/8"St.	5/8"St.	1/2"St.	1/2"St.

ISSUE	MODIFICATION DETAILS	ECN No.	DATE	BY
9	NEW FAN ARRGT - SEPARATE FAN PLATE / TOP PLATE		17/03/2011	T_Bryant
8	NEW FAN ARRANGEMENT - ALL IN ON FAN PLATE/TOP PLATE		14/02/2011	T_Bryant
7	GEA BORDER ADDED		24/02/2010	T_Bryant

REVISION HISTORY

THIRD ANGLE PROJECTION
Sheet Size A2
IF IN DOUBT ASK DO NOT SCALE

GEA Searle

© GEA Searle Ltd - All Rights Reserved
"This document is protected by copyright, and the design it contains is protected by both copyright & design right, all such rights being owned by GEA Searle Ltd. This document may also contain information which is confidential to that Company. Neither this document nor the design or information which it contains may therefore be used, sold, licensed, transferred, copied, lent, disclosed to any third party or otherwise be reproduced in whole or in part an any manner or form than with the prior written consent of that Company."

Finish: RAL9010	Weight: 35.1 kg
Material:	
TOLERANCES - UNLESS OTHERWISE STATED: Simple Assy's (max 3 Parts) ± 1.0mm; Complex Assy's (multiple Parts) ± 3.0mm	Checked:
CUSTOMER / PROJECT NO:	Job No.:
Description: GA KEC20, 25 & 30 (CASE 550)	
Designed By: T_Bryant	Date: 14/02/2008
Drawn By: T_Bryant	Date: 17/04/2008
Part No. / 3D Model Ref.: KEC20	Sheet Number: 1 of 1
Drawing / File Ref: KEC20-30.idw	Issue: 9

FANSET
ELEC SUPPLY 220/240V-1Ph-50-60Hz
KEC35 & KEC45-LS:
231-9030-0121 - 35W - 1370RPM
KEC40 & KEC45:
231-9030-0321 - 73W - 1660RPM

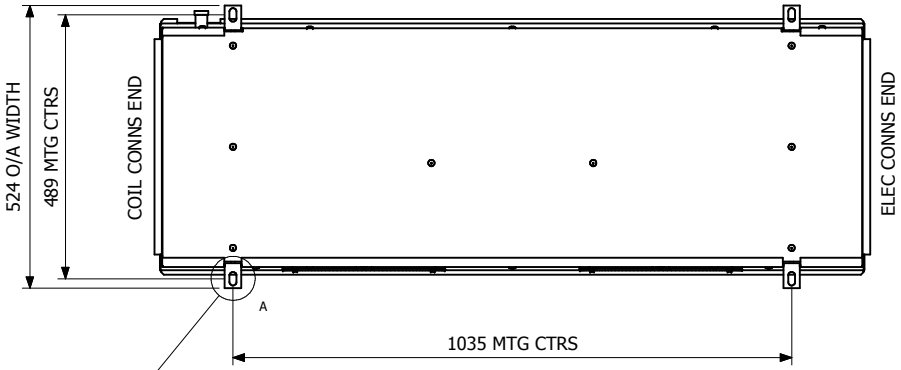

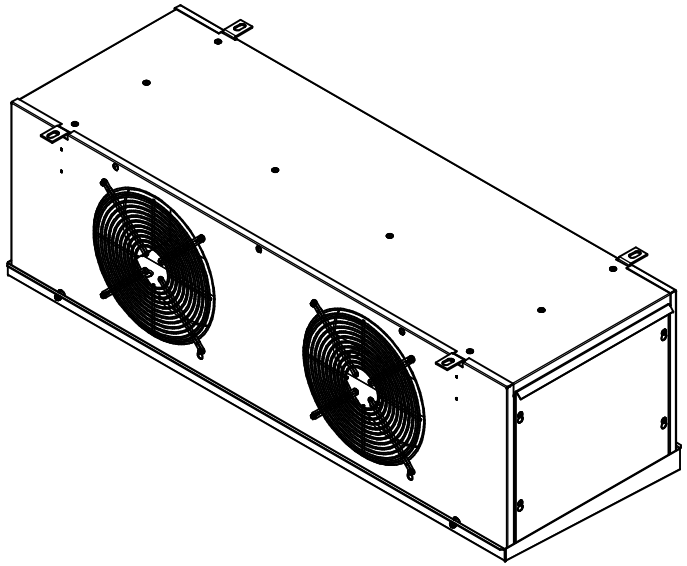

DRY WEIGHTS (APPROX INC. HTRS)			
UNIT	CU/AL	CU/AV	CU/CU
KEC35	47Kg	47Kg	61Kg
KEC40	47Kg	47Kg	61Kg
KEC45	53Kg	53Kg	74Kg

HANGING BRKT
DETAIL TYP.

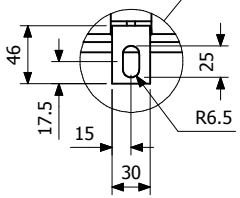

	CONNECTION SIZE TABLE					
	DX		GLYCOL		CO2	
UNIT	INLET	OUTLET	INLET	OUTLET	INLET	OUTLET
KEC35	1/2"St.	7/8"St.	5/8"St.	5/8"St.	1/2"St.	1/2"St.
KEC40	1/2"St.	7/8"St.	5/8"St.	5/8"St.	1/2"St.	1/2"St.
KEC45	1/2"St.	7/8"St.	5/8"St.	5/8"St.	1/2"St.	1/2"St.

CAUTION!
ISOLATE UNIT FROM ELECTRICAL
SUPPLY BEFORE UNDERTAKING
ANY MAINTENANCE WORK

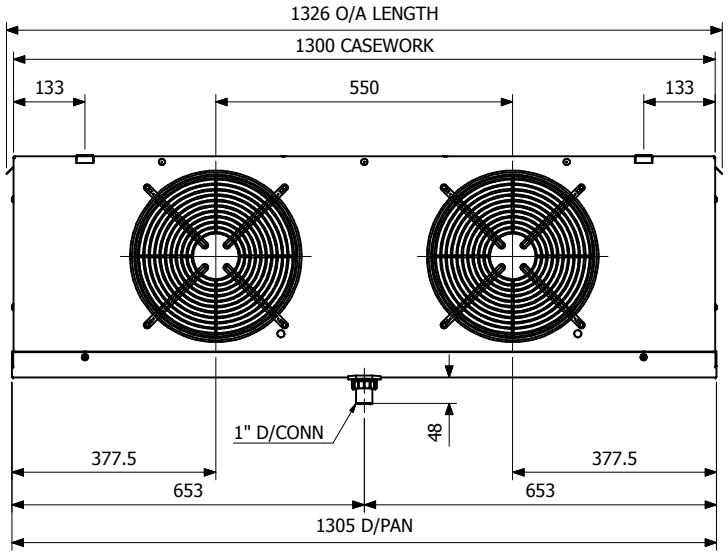

<----------
HEATER REMOVAL
600mm (EITHER END)

MAINTENANCE ACCESS
REQUIRED BOTH ENDS
OF UNIT

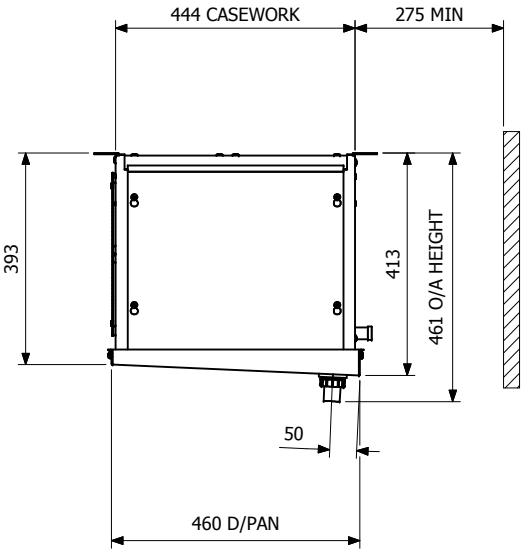

STD ELECTRIC DEFROST (IF FITTED)
ELEC SUPPLY 220/240V-1Ph-50Hz
COIL BLOCK - 2 x HTR PAIRS 400W EACH
DRAIN PAN - 1 x HTR PAIR 400W EACH

ISSUE	MODIFICATION DETAILS	ECN No.	DATE	BY
10	NEW FAN ARRANGEMENT - SEPARATE FAN PLATE / TOP PLATE		14/03/2011	T_Bryant
9	NEW FAN ARRAGEMENT - ALL IN ONE FAN PLATE/TOP PLATE		14/02/2011	T_Bryant
8	KEC45 LOW SPEED OPTION ADDED. GEA BORDER ADDED		13/11/2009	T_Bryant

REVISION HISTORY

THIRD ANGLE PROJECTION
Sheet Size A2
IF IN DOUBT ASK DO NOT SCALE

GEA Searle

© GEA Searle Ltd - All Rights Reserved
This document is protected by copyright, and the design it contains is protected by both copyright & design right, all such rights being owned by GEA Searle Ltd. This document may also contain information which is confidential to that Company. Neither this document nor the design or information which it contains may therefore be used, sold, licensed, transferred, copied, lent, disclosed to any third party or otherwise be reproduced in whole or in part an any manner or form than with the prior written consent of that Company.

Finish: RAL9010
Weight: 52.2 kg
Material:
TOLERANCES - UNLESS OTHERWISE STATED
Simple Assy's (max 3 Parts) ± 1.0mm
Complex Assy's (multiple Parts) ± 3.0mm
Checked:
CUSTOMER / PROJECT NO: EP1173
Job No.:
Description: GA KEC35, 40 & 45 (CASE 1000)
Designed By: T_Bryant — Date: 14/02/2008
Drawn By: T_Bryant — Date: 17/04/2008
Part No. / 3D Model Ref.: KEC35
Sheet Number: 1 of 1
Drawing / File Ref: KEC35-45.idw
Issue: 10

DRY WEIGHTS (APPROX INC. HEATERS)			
UNIT	CU/AL	CU/AV	CU/CU
KEC55	67Kg	67Kg	87Kg
KEC70	74Kg	74Kg	105Kg

	CONNECTION SIZE TABLE					
	DX		GLYCOL		CO2	
UNIT	INLET	OUTLET	INLET	OUTLET	INLET	OUTLET
KEC55	5/8"St.	7/8"St.	5/8"St.	5/8"St.	1/2"St.	5/8"St.
KEC70	5/8"St.	7/8"St.	5/8"St.	5/8"St.	1/2"St.	5/8"St.

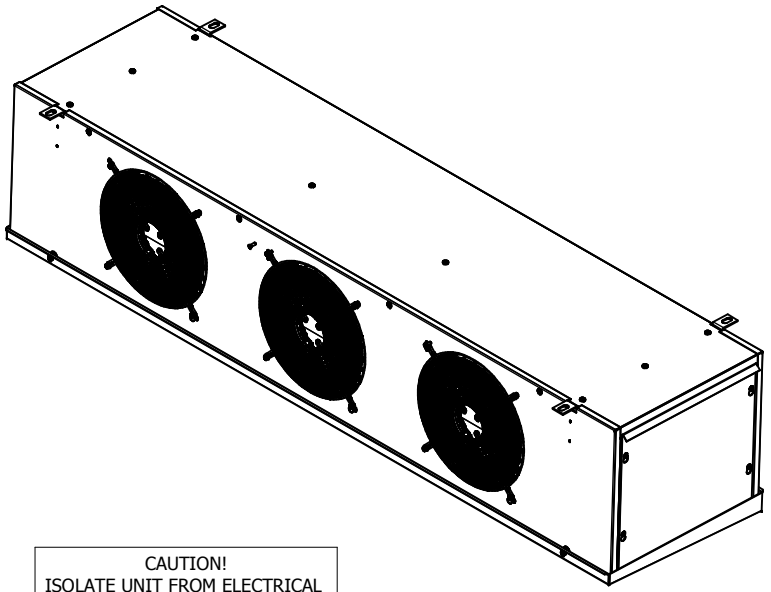

STD ELECTRIC DEFROST (IF FITTED)
ELEC SUPPLY 220/240V-1Ph-50Hz
COIL BLOCK - 2 x HTR PAIRS 600W EACH
DRAIN PAN - 1 x HTR PAIR 600W EACH

FANSET
ELEC SUPPLY 220/240V-1Ph-50-60Hz
KEC55 & 70:
231-9030-0321 - 73W - 1660RPM

CAUTION!
ISOLATE UNIT FROM ELECTRICAL SUPPLY BEFORE UNDERTAKING ANY MAINTENANCE WORK

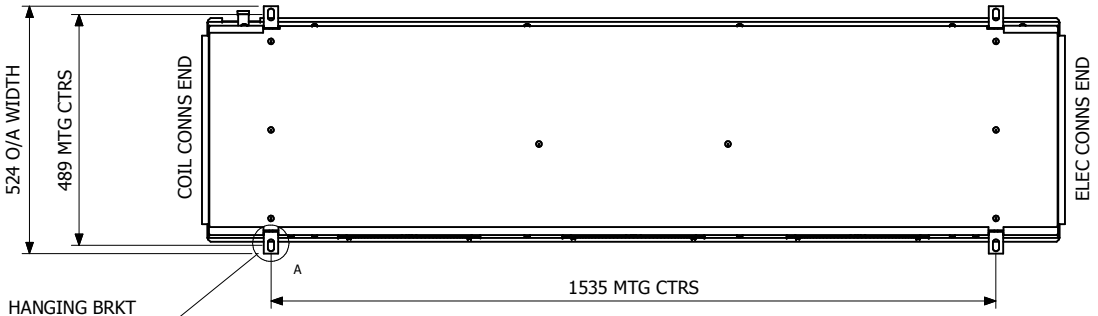

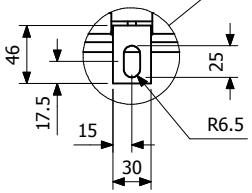

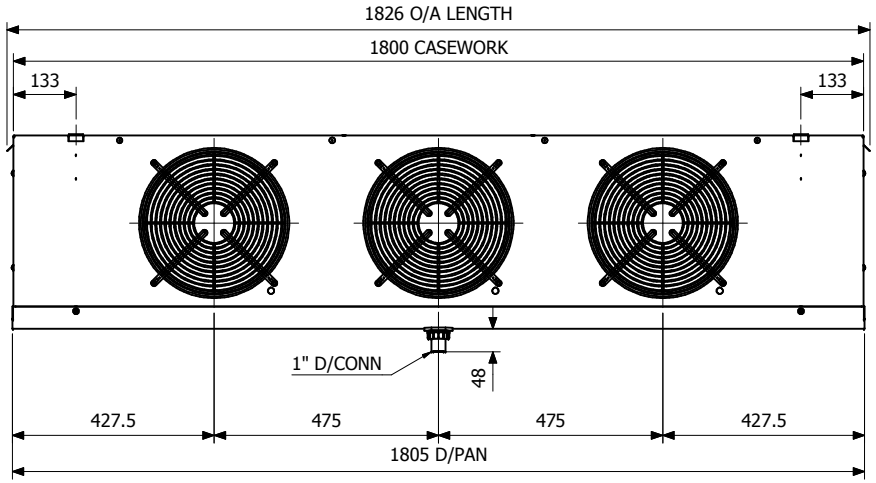

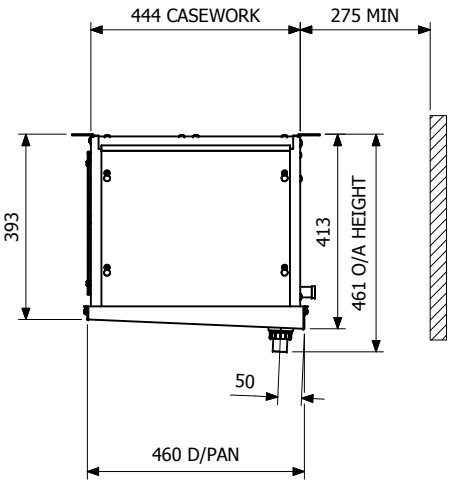

<-----------
HEATER REMOVAL
600mm (EITHER END)

MAINTENANCE ACCESS
RQUIRED BOTH ENDS
OF UNIT

ISSUE	MODIFICATION DETAILS	ECN No.	DATE	BY
8	NEW FAN ARRGT - SEPARATE FAN PLATE / TOP PLATE		14/03/2011	T_Bryant
7	NEW FAN ARRGT - ALL IN ONE FAN PLATE / TOP PLATE		14/02/2011	T_Bryant
6	GEA BORDER ADDED		24/02/2010	T_Bryant

REVISION HISTORY

THIRD ANGLE PROJECTION
Sheet Size A2
IF IN DOUBT ASK DO NOT SCALE

GEA Searle

© GEA Searle Ltd - All Rights Reserved
"This document is protected by copyright, and the design it contains is protected by both copyright & design right, all such rights being owned by GEA Searle Ltd. This document may also contain information which is confidential to that Company. Neither this document nor the design or information which it contains may therefore be used, sold, licensed, transferred, copied, lent, disclosed to any third party or otherwise be reproduced in whole or in part an any manner or form than with the prior written consent of that Company."

Finish: RAL9010	Weight: N/A
Material:	
TOLERANCES - UNLESS OTHERWISE STATED Simple Assy's (max 3 Parts) ± 1.0mm Complex Assy's (multiple Parts) ± 3.0mm	Checked
CUSTOMER / PROJECT NO	Job No.
Description: GA KEC55 & 70 (CASE 1500)	
Designed By: T_Bryant	Date: 14/02/2008
Drawn By: T_Bryant	Date: 17/04/2008
Part No. / 3D Model Ref.: KEC55	Sheet Number: 1 of 1
Drawing / File Ref: KEC55-70.idw	Issue: 8

DRY WEIGHTS (APPROX INC. HEATERS)			
UNIT	CU/AL	CU/AV	CU/CU
KEC55	67Kg	67Kg	87Kg

	CONNECTION SIZE TABLE					
	DX		GLYCOL		CO2	
UNIT	INLET	OUTLET	INLET	OUTLET	INLET	OUTLET
KEC55	5/8"St.	7/8"St.	5/8"St.	5/8"St.	1/2"St.	5/8"St.

ELECTRIC DEFROST
ELEC SUPPLY 220/240V-1Ph-50Hz
3 x HTR PAIRS 600W EACH

FANSET
ELEC SUPPLY 220/240V-1Ph-50-60Hz
KEC55 - W1G FAN - 30W - 1370RPM

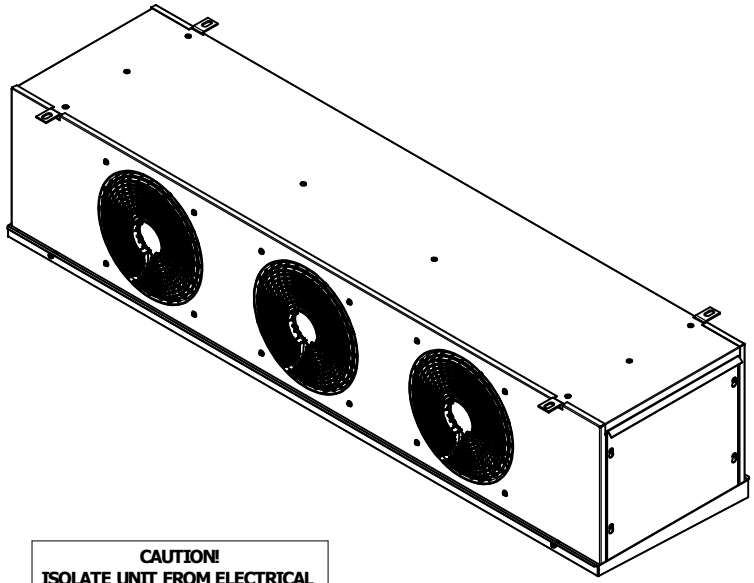

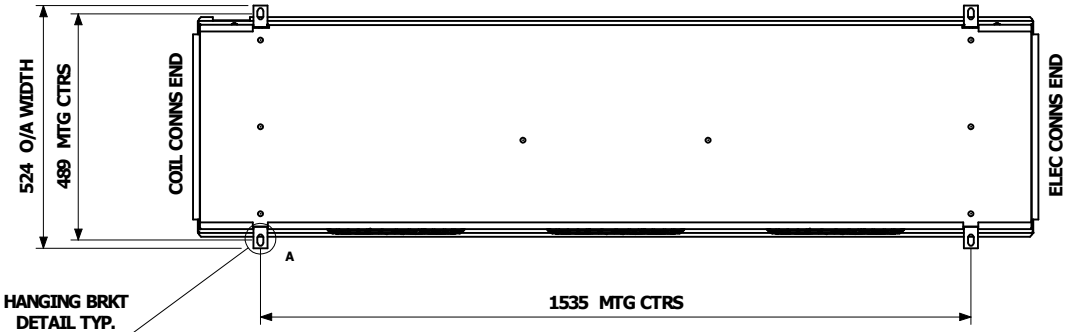

HANGING BRKT DETAIL TYP.

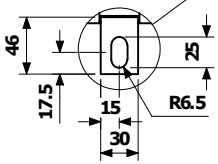

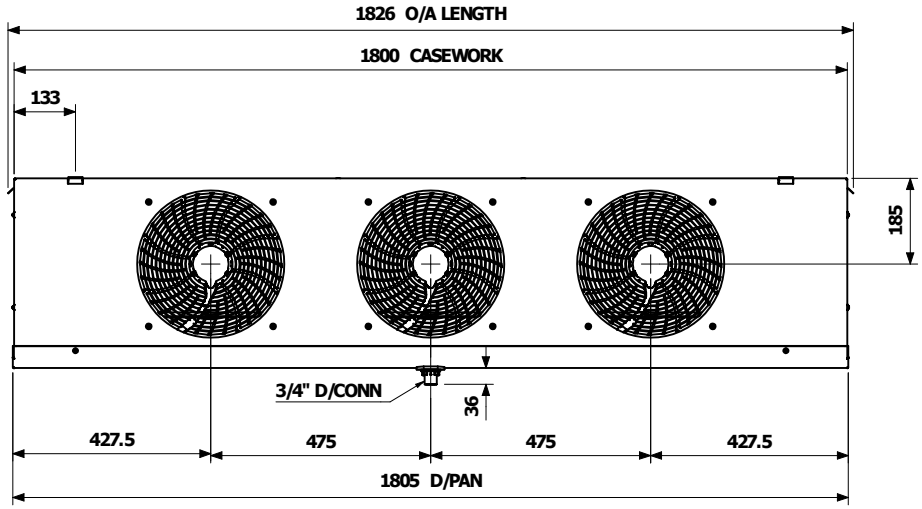

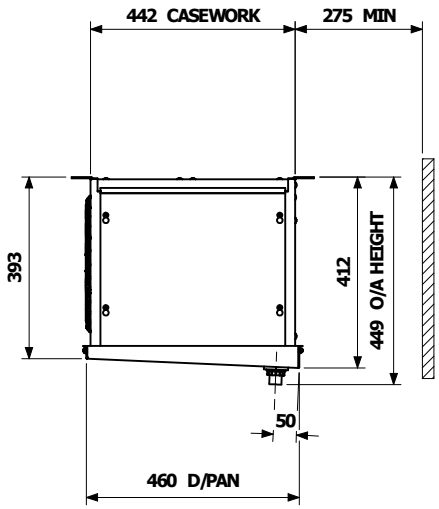

<---------- HEATER REMOVAL 600mm (EITHER END)

MAINTENANCE ACCESS RQUIRED BOTH ENDS OF UNIT

CAUTION!
ISOLATE UNIT FROM ELECTRICAL SUPPLY BEFORE UNDERTAKING ANY MAINTENANCE WORK

ISSUE	MODIFICATION DETAILS	ECN No.	DATE	BY
2	HANGING BRKT DETAIL ALTERED		29/09/2008	T_Bryant

REVISION HISTORY

THIRD ANGLE PROJECTION

Sheet Size A2 — IF IN DOUBT ASK DO NOT SCALE

searle

© [2007] ICG (UK) Limited - All Rights Reserved
"This document is protected by copyright, and the design it contains is protected by both copyright & design right, all such rights being owned by ICG (UK) Limited. This document may also contain information which is confidential to that Company. Neither this document nor the design or information which it contains may therefore be used, sold, licensed, transferred, copied, lent, disclosed to any third party or otherwise be reproduced in whole or in part in any manner or form than with the prior written consent of that Company."

Finish: RAL9010	Weight: N/A
Material:	
TOLERANCES - UNLESS OTHERWISE STATED: Simple Assy's (max 3 Parts) ± 1.0mm; Complex Assy's (multiple Parts) ± 3.0mm	Checked:
CUSTOMER / PROJECT NO:	Job No.:
Description: GA KEC55-LV (CASE 1500)	
Designed By: T_Bryant	Date: 14/02/2008
Drawn By: T_Bryant	Date: 17/04/2008
Part No. / 3D Model Ref.: KEC55	Sheet Number: 1 of 1
Drawing / File Ref: KEC55-LV.idw	Issue: 2