A3 DO NOT SCALE THIRD ANGLE PROJECTION IF IN DOUBT ASK

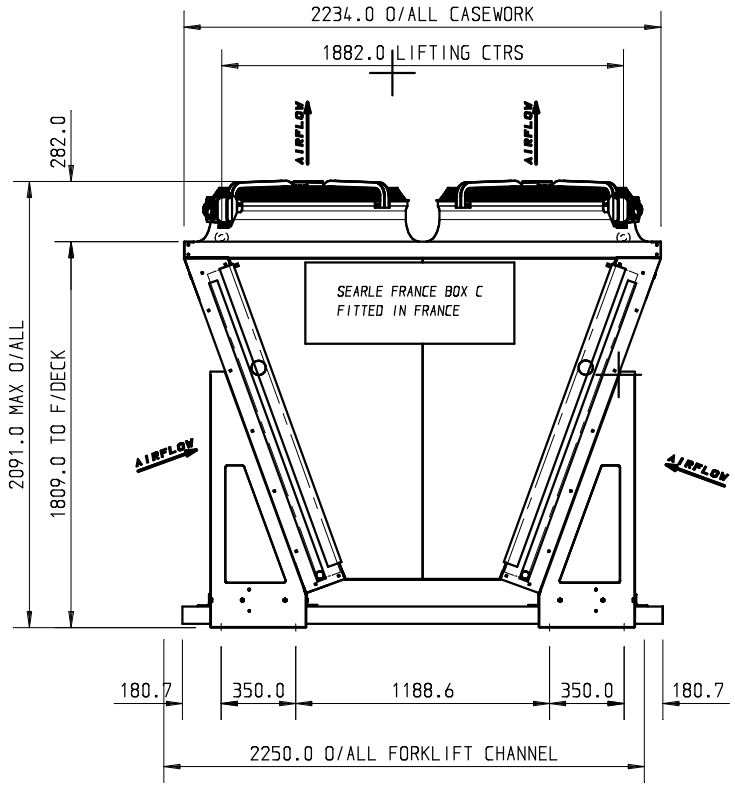

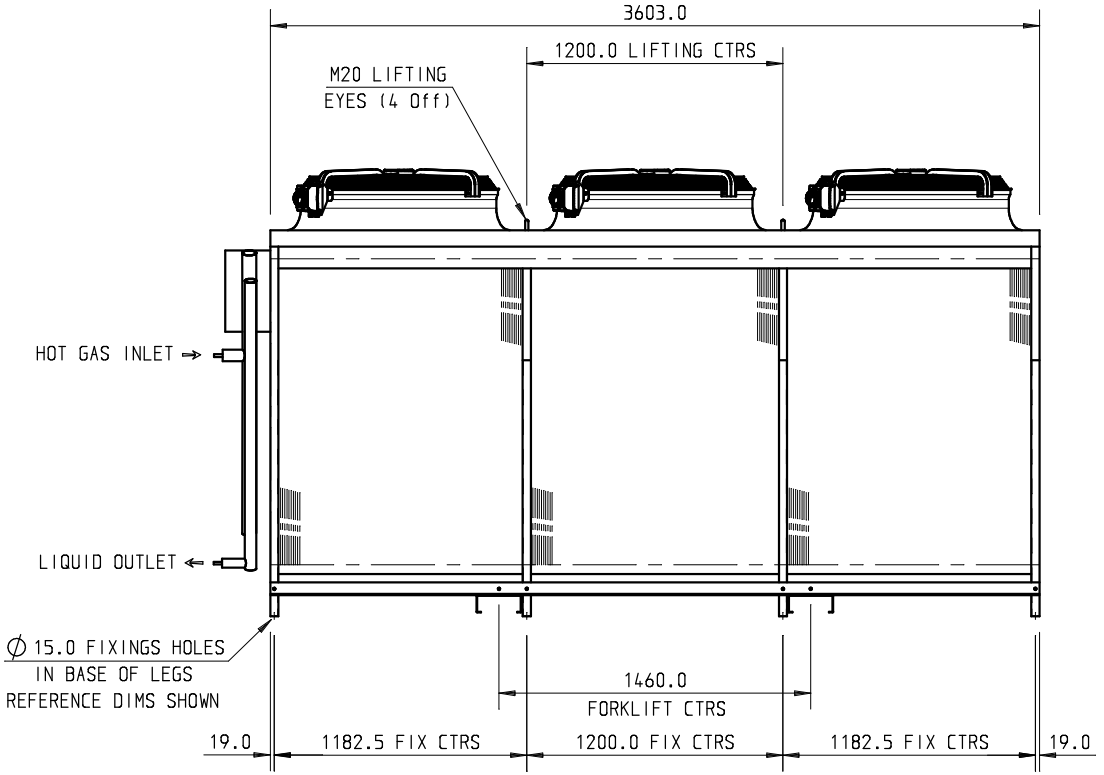

FANSET MANUFACTURER:	EBM
FANSET QUANTITY:	6
FAN TYPE:	EC43 AXIAL FANSET
FAN DIAMETER:	900mm
MAX. MOTOR SPEED:	780 RPM
MOTOR POWER:	1.70 kW
ELECTRICAL SUPPLY:	400V-3PH-50Hz

MVA	No. ROWS	COIL VOL	DRY WEIGHT Kgs	CONNECTIONS	
			AL/AV	HOT GAS	LIQUID
234M	4	186 L	1287	Ø 2.1/8"	Ø 1.3/8"

NOTES
1. ALL WEIGHTS ARE CALCUALTED THEREFORE ARE APPROXIMATE VALUES

ISS	MODIFICATION	SCN	DATE

TOLERANCES ASSEMBLY UNLESS OTHERWISE STATED
SIMPLE ASSY'S (2 to 3 Parts) ±1.0mm
COMPLEX ASSY'S (Multiple Parts) ±3.0mm

MATERIAL

FINISH RAL7036

GEA Searle

© GEA Searle - All Rights Reserved
"This document is protected by copyright, and the design it contains is protected by both copyright & design right. All such rights being owned by GEA Searle. This document may also contain information which is confidential to that Company. Neither the whole nor any part of this document may be disclosed to any other person, firm, company, corporation, limited, disclosed to any third party or otherwise be reproduced in whole or in part in any manner or form than with the prior written consent of that Company."

DATE	SCALE	PART	PART No.	ISS
23/07/12	1:25	M-09EC 435 AL WIRED SFPLTE'C'	MVA234/5012742	01

DRAWN	CHECKED	FOR	JOB No.	DRG. FILE REF
DAW	DAW	SEARLE FRANCE	N/A	92-234-12742.01