Mounting Guide

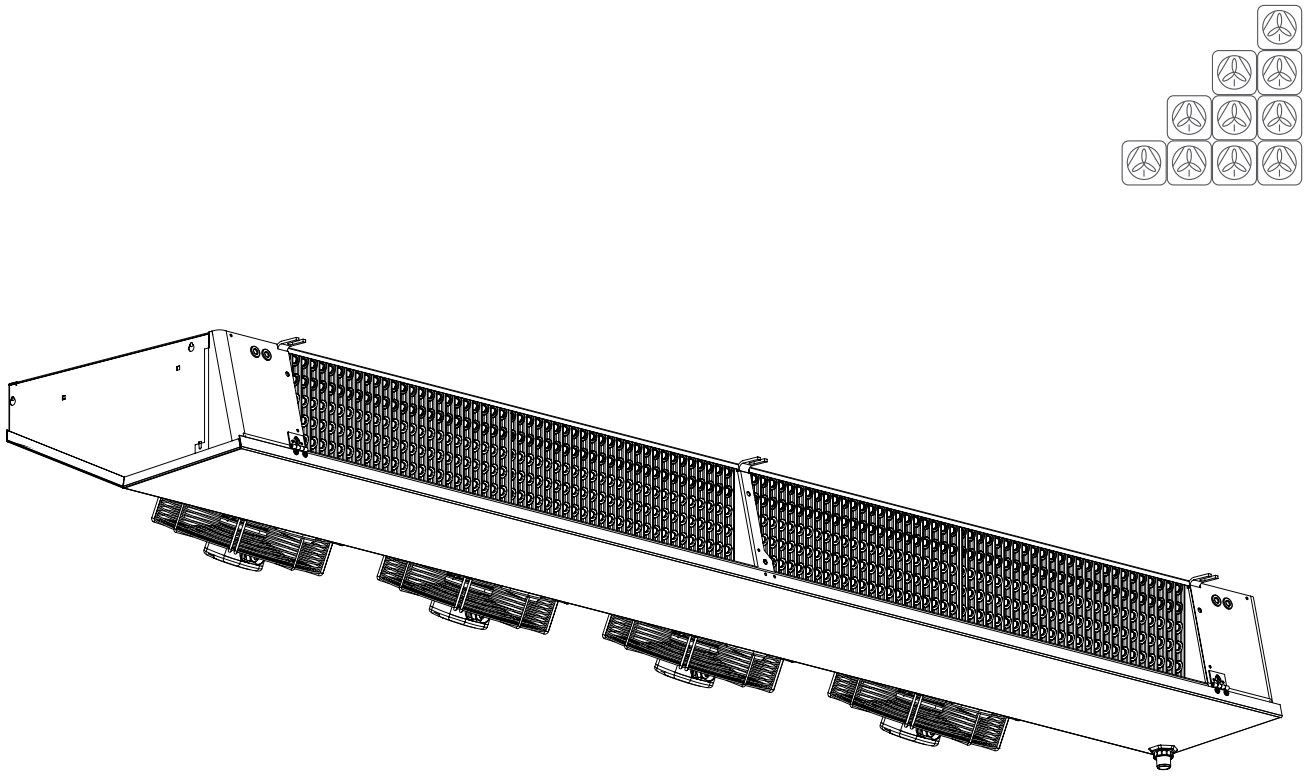

Küba *compact* DF

Mounting Guide
Page 2-4

- Dimensions
- Weights
- Assembly

Electrical wiring
Page 5-9

- Motor wiring diagram
- Electrical defrosting wiring diagram
- Cabling

Dimensions

Weights

Type	H±5	W±5	D±5	L±5	F±3
DF	mm	mm	mm	mm	mm
051 D	268	872	626	612	171
061 D	268	972	626	612	171
071 D	268	972	626	612	171
–	–	–	–	–	–
–	–	–	–	–	–
052 D	268	1372	626	612	171
062 D	268	1572	626	612	171
072 D	268	1572	626	612	171
–	–	–	–	–	–
–	–	–	–	–	–
063 D	268	2172	626	612	171
073 D	268	2172	626	612	171
–	–	–	–	–	–
–	–	–	–	–	–
–	–	–	–	–	–
064 D	268	2772	626	612	171
074 D	268	2772	626	612	171
–	–	–	–	–	–
–	–	–	–	–	–
–	–	–	–	–	–

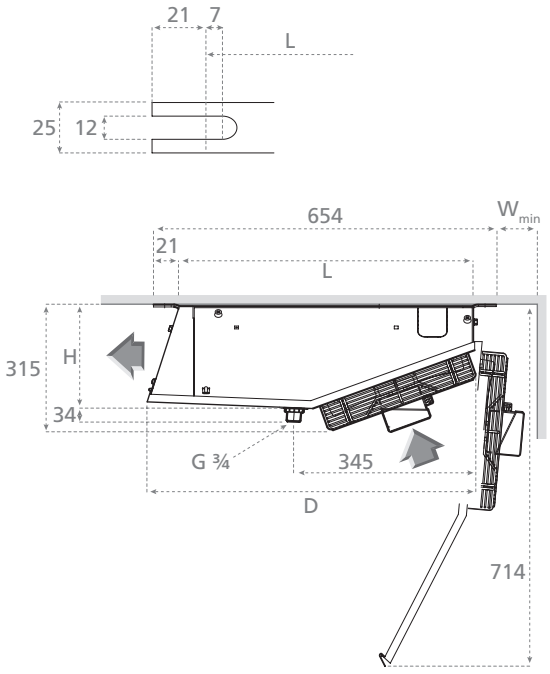

Type	E1±5	E2±5	B_{min}	W_{min}	Weight	
DF	mm	mm	mm	mm	kg	
					net	gross
051 D	530	–	700	100	20	23
061 D	630	–	800	100	23	26
071 D	630	–	800	100	25	28
–	–	–	–	–	–	–
–	–	–	–	–	–	–
052 D	1030	–	1200	100	32	54
062 D	1230	–	1400	100	37	60
072 D	1230	–	1400	100	40	63
–	–	–	–	–	–	–
–	–	–	–	–	–	–
063 D	1830	629	2000	100	50	88
073 D	1830	629	2000	100	54	92
–	–	–	–	–	–	–
–	–	–	–	–	–	–
–	–	–	–	–	–	–
064 D	2430	1229	2600	100	66	108
074 D	2430	1229	2600	100	73	115
–	–	–	–	–	–	–
–	–	–	–	–	–	–
–	–	–	–	–	–	–

Assembly

1

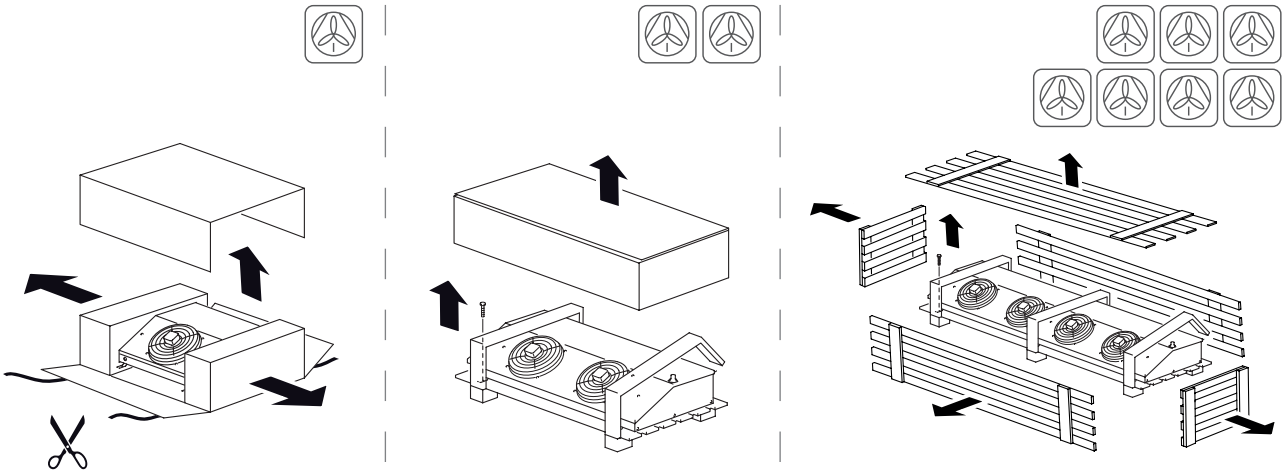

2

2.1

2.2

2.3

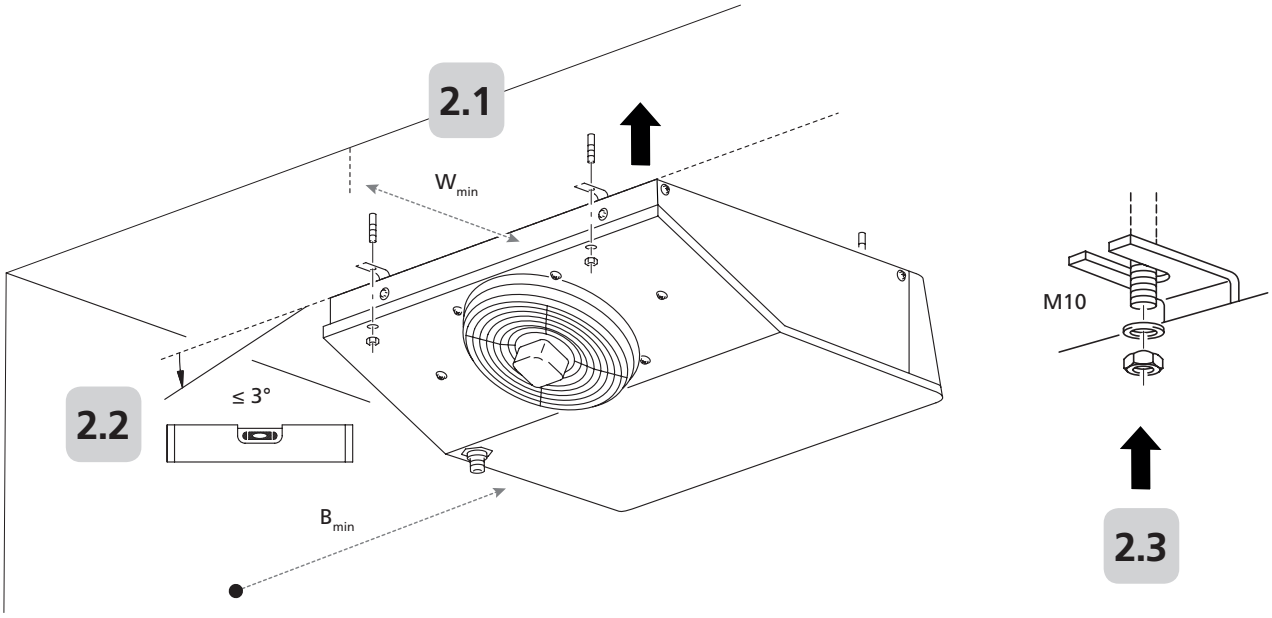

3

3.1

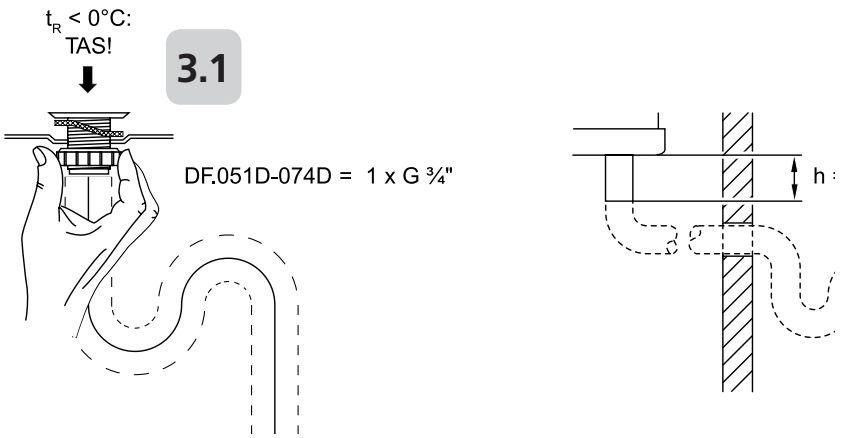

Assembly

4
4.1
4.2
4.3
4.4
4.5
4.6
4.7
4.8
4.9
4.10
4.11
4.12

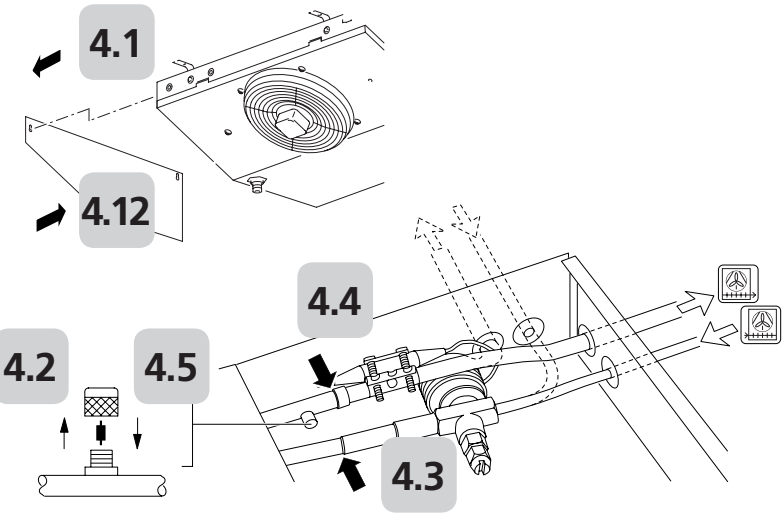

DF	DFA	DFA	DFB	DFB
	ø mm	ø mm	ø mm	ø mm
051 D	10	12	10	12
061 D	10	12	10	12
071 D	10	18	10	18
052 D	10	18	10	18
062 D	12	22	10	22
072 D	12	22	10	22
063 D	12	22	10	22
073 D	12	28	10	28
064 D	12	28	10	28
074 D	15	28	15	28

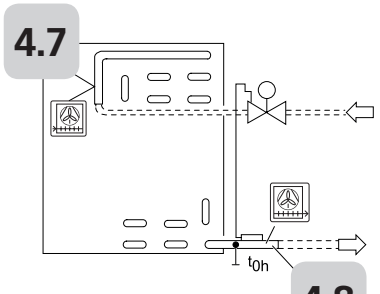

DFA
051 D
061 D
071 D
052 D

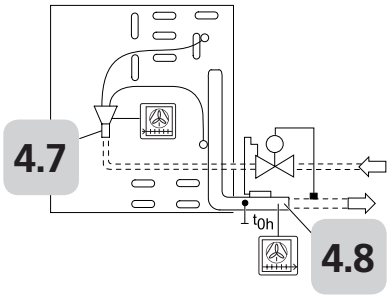

DFB
062 D
072 D
063 D
073 D
064 D
074 D

4.6

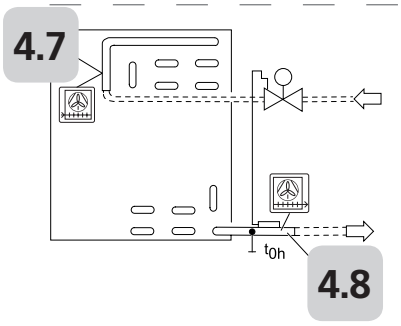

DFA
051 D
061 D
071 D
052 D

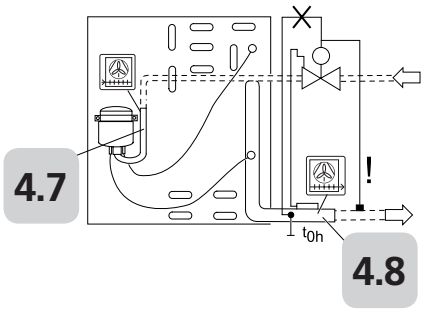

DFB
062 D
072 D
063 D
073 D
064 D
074 D

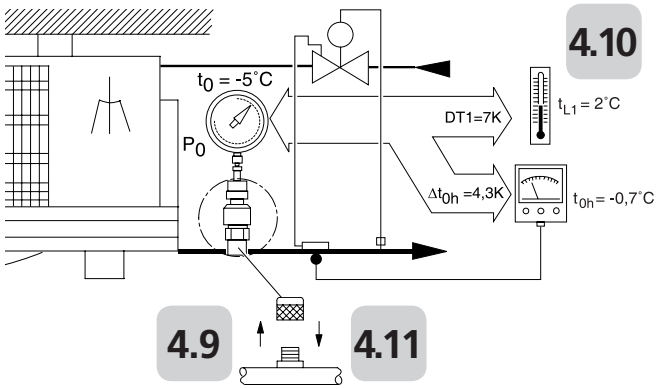

$\Delta t_{0h} \cong 0.5 \ldots 0.7 \times DT1$

DT1 10K ≅ Δt_{0h} 6.1 K
DT1 9K ≅ Δt_{0h} 5.5 K
DT1 8K ≅ Δt_{0h} 4.9 K
DT1 7K ≅ Δt_{0h} 4.3 K
DT1 6K ≅ Δt_{0h} 3.7 K
DT1 5K ≅ Δt_{0h} 3.1 K
DT1 4K ≅ Δt_{0h} 2.5 K

Electrical wiring

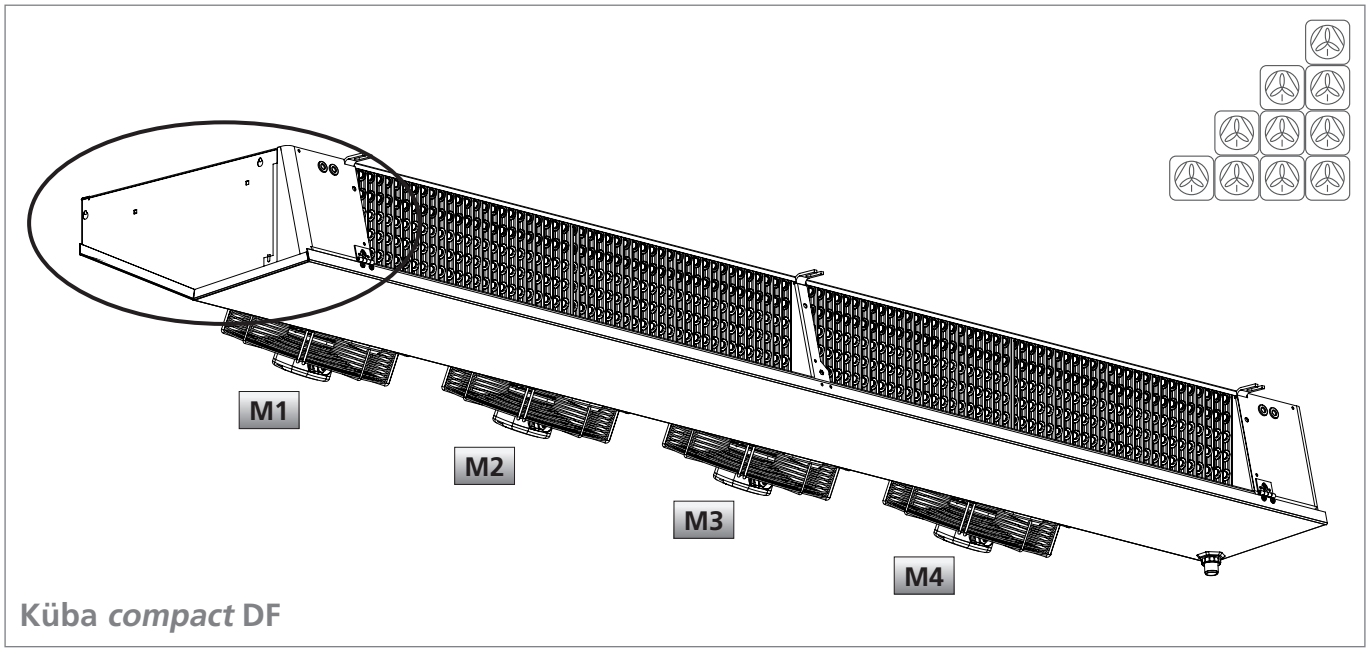

Küba *compact* DF

Motor

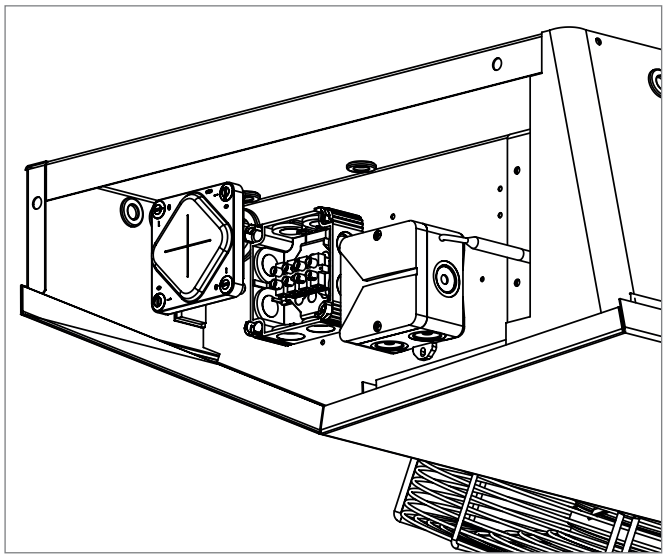

Electrical defrost

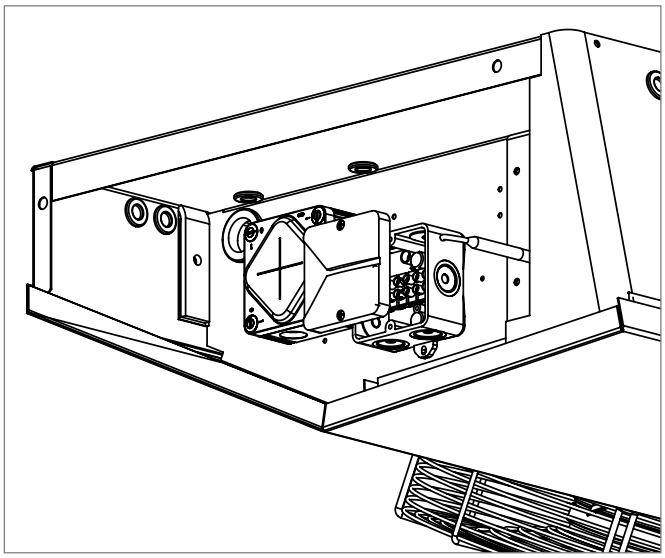

compact DF

Motor wiring diagram

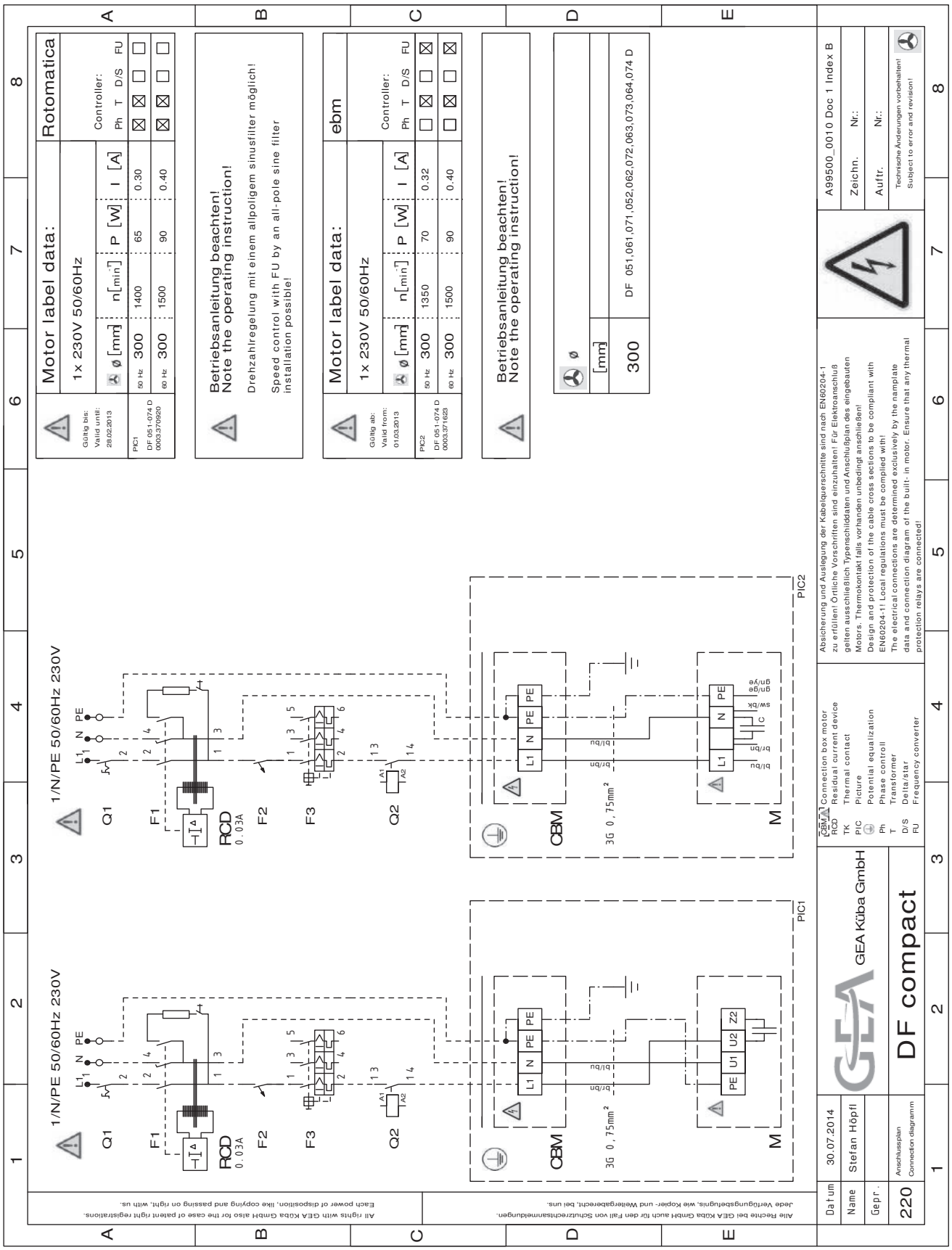

Electrical defrost wiring diagram

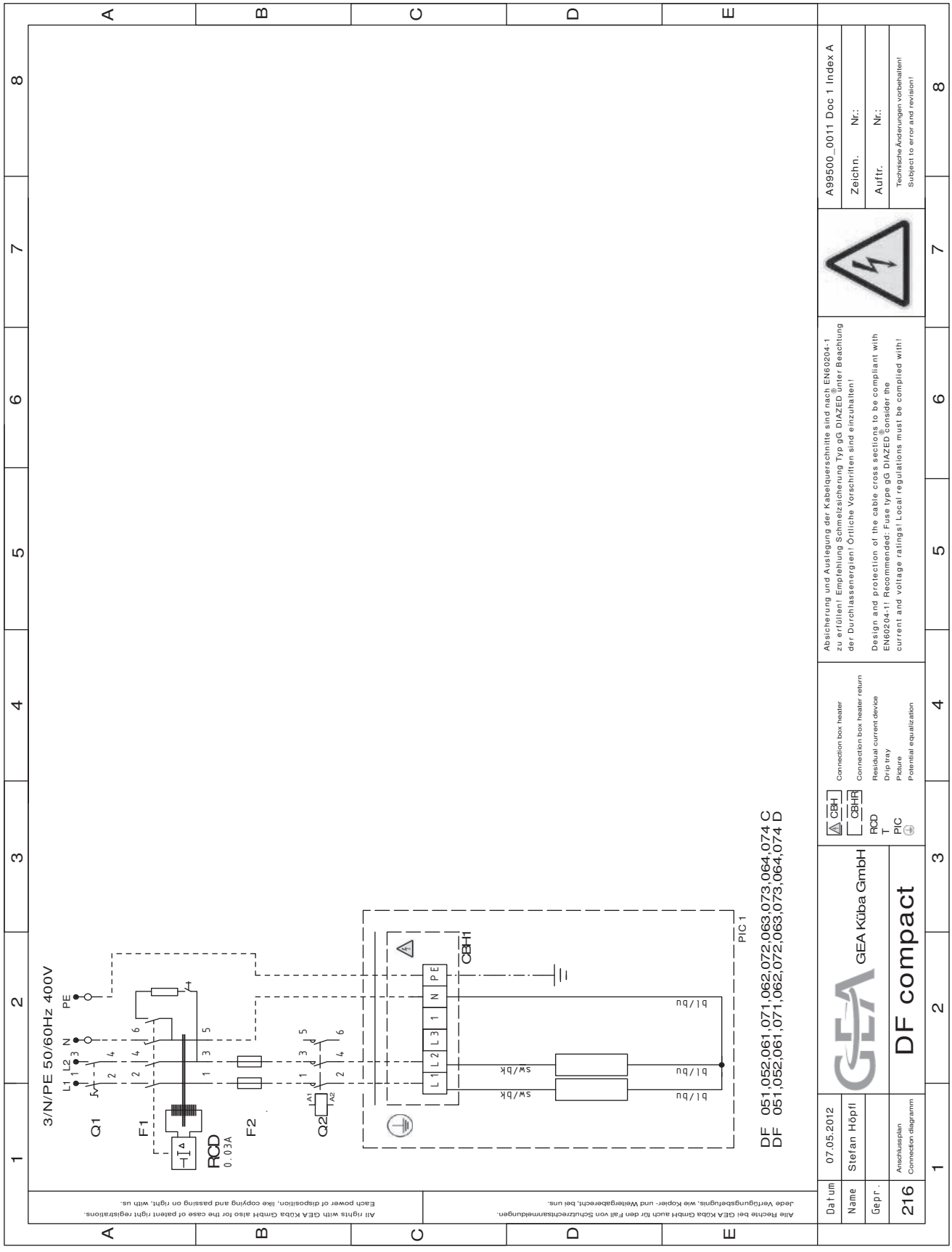

Cabling

DF.D *compact*

Standard/Series **Wiring diagram number: A99500_0011** (Doc 2; Index A)																	
Type		Coil heating bar (KÖ)				Drip tray heating bar (D)									**L1**		
DFAE.D DFBE.D	Finned length	Number	Length	Capacity P	Form	Number	Length	Capacity P	Form	Total capacity of all heating circuits	Total number of all heating circuits	Heating circuit no.	**PIC** **on the wiring diagram**	No. of heating element, coil KÖ	No. of heating element, drip tray D	No. of heating element, drip tray D (R)
Type	L [mm]	KÖ [pcs]	L [mm]	P [W]		TW [pcs]	L [mm]	P [W]		P [kW]	[pcs]	[Nb]		[pcs]	[pcs]	[pcs]
DFAE.D DFBE.D	Finned length															
051 D	300	2	1500	535	U114					1.1	1	CBH1	1	1		
061 D	400	2	1600	575	U114					1.2	1	CBH1	1	1		
071 D	400	2	1600	575	U114					1.2	1	CBH1	1	1		
052 D	1000	2	2400	880	U114					1.8	1	CBH1	1	1		
062 D	1200	2	2800	1035	U114					2.1	1	CBH1	1	1		
072 D	1200	2	2800	1035	U114					2.1	1	CBH1	1	1		
063 D	1800	2	4000	1490	U114					3.0	1	CBH1	1	1		
073 D	1800	2	4000	1490	U114					3.0	1	CBH1	1	1		
064 D	2400	2	5200	1950	U114					3.9	1	CBH1	1	1		
074 D	2400	2	5200	1950	U114					3.9	1	CBH1	1	1		

	CBH connection box Heater Heating circuit												CBHR connection box Heater return Heating circuit return			
	L2			L3												
	No. of heating element, coil KÖ	No. of heating element, drip tray D	No. of heating element, drip tray D (R)	No. of heating element, coil KÖ	No. of heating element, drip tray D	No. of heating element, drip tray D (R)	Total capacity of heating circuit P	Current L1	Current L2	Current L3	Recom-mended cable cross-section for supply line (building-side)	SKS	Junction box Conn. box with earthing cable	Heating circuit no.	Junction box connection box	Minimum cable cross-section for return	Cable length for parts list
	[pcs]	[pcs]	[pcs]	[pcs]	[pcs]	[pcs]	P [kW]	I [A]	I [A]	I [A]	min [mm²]	[Size]	CBH	[Nb]	CBHR	min [mm²]	[m]
													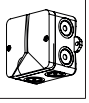		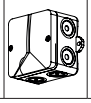		
1						1.1	2.3	2.3	0.0	2.50	4	ABO025				
1						1.2	2.5	2.5	0.0	2.50	3	ABO025				
1						1.2	2.5	2.5	0.0	2.50	3	ABO025				
1						1.8	3.8	3.8	0.0	2.50	3	ABO025				
1						2.1	4.5	4.5	0.0	2.50	3	ABO025				
1						2.1	4.5	4.5	0.0	2.50	3	ABO025				
1						3.0	6.5	6.5	0.0	2.50	3	ABO025				
1						3.0	6.5	6.5	0.0	2.50	3	ABO025				
1						3.9	8.5	8.5	0.0	2.50	3	ABO025				
1						3.9	8.5	8.5	0.0	2.50	3	ABO025				

GEA Küba GmbH

Kühler Weg 1 · 82065 Baierbrunn · Germany
Tel.: +49 89/744 73-0 · Fax: +49 89/744 73-107
kueba@gea.com · www.kueba.com

© Copyright 2014 GEA Küba GmbH · 0001.392269.1 · Status 08/2014
Technical modifications reserved