A3 DO NOT SCALE THIRD ANGLE PROJECTION IF IN DOUBT ASK

" This document is protected by copyright, and the design it contains is protected by both copyright and design right, all such rights being owned by ICG (UK) Limited. This document may also contain information which is confidential to that Company. Neither this document nor the design or information which it contains may therefore be used, sold, licensed, transferred, copied, lent, disclosed to any third party or otherwise reproduced in whole or in part in any manner or form other than with the prior written consent of that Company.

© [20] ICG (UK) Limited. All Rights Reserved."

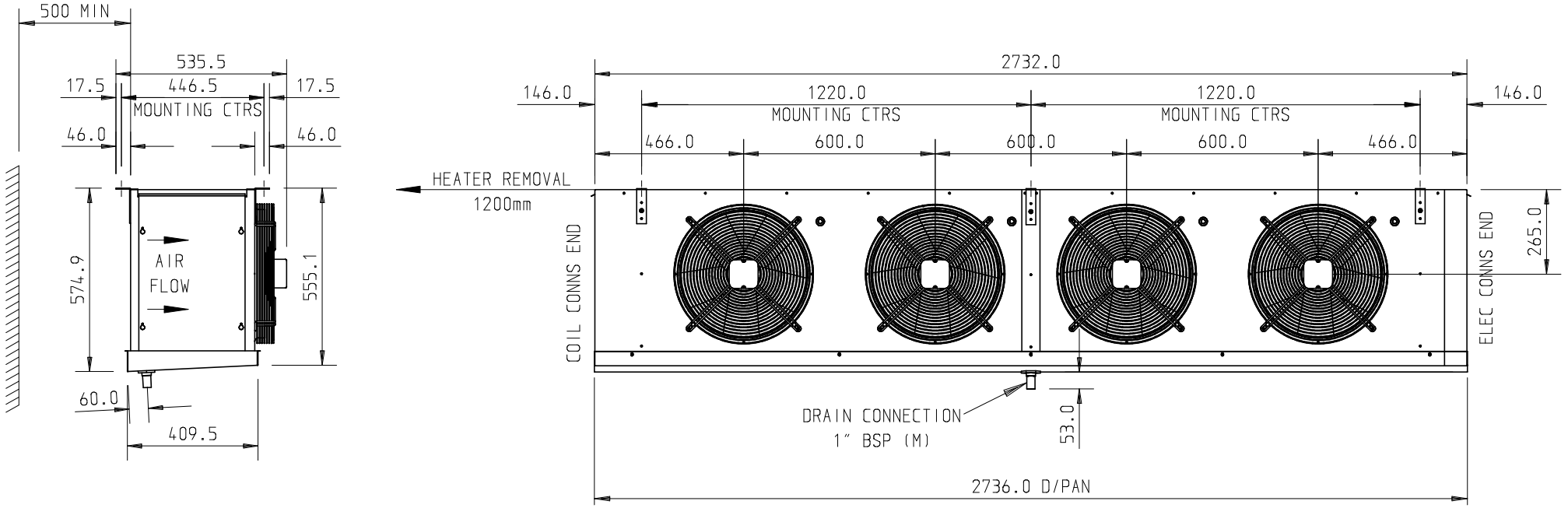

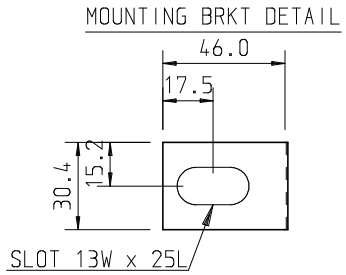

MOTORS	
ELEC SUPPLY	230V-1PH-50/60Hz
50Hz: 160W	4POLE 1410RPM(NOM)
60Hz: 240W	4POLE 1580RPM(NOM)
ELEC SUPPLY	400/430V-3PH-50/60Hz
50Hz: 135W	4POLE 1400RPM(NOM)
60Hz: 185W	4POLE 1650RPM(NOM)

STANDARD ELECTRIC DEFROST	
ELEC SUPPLY	380/420V-3PH-50/60Hz
COIL: 6 x HEATERS	" 940W EACH
TRAY: 6 x HEATERS	" 940W EACH

"HEAVY" ELECTRIC DEFROST	
ELEC SUPPLY	380/420V-3PH-50/60Hz
COIL: 10 x HEATERS	" 940W EACH
TRAY: 3 x HEATERS	" 940W EACH

ISS	MODIFICATION	SCN	DATE

TOLERANCES ASSEMBLY UNLESS OTHERWISE STATED
SIMPLE ASSY'S (2 to 3 Parts) ±1.0mm
COMPLEX ASSY'S (Multiple Parts) ±3.0mm

MATERIAL

FINISH

searle MANUFACTURING COMPANY
NEWGATE LANE FAREHAM HANTS PO14 1AR

DATE 13/07/07 | SCALE 1:13 | PART SALES OUTLINE KME175

PART No.

ISS 01

DRAWN TDB | CHECKED TDB | FOR N/A | JOB No. N/A

DRG. FILE REF KME175.01

A3 DO NOT SCALE THIRD ANGLE PROJECTION IF IN DOUBT ASK

" This document is protected by copyright, and the design it contains is protected by both copyright and design right, all such rights being owned by ICG (UK) Limited. This document may also contain information which is confidential to that Company. Neither this document nor the design or information which it contains may therefore be used, sold, licensed, transferred, copied, lent, disclosed to any third party or otherwise reproduced in whole or in part in any manner or form other than with the prior written consent of that Company.

© [20] ICG (UK) Limited. All Rights Reserved."

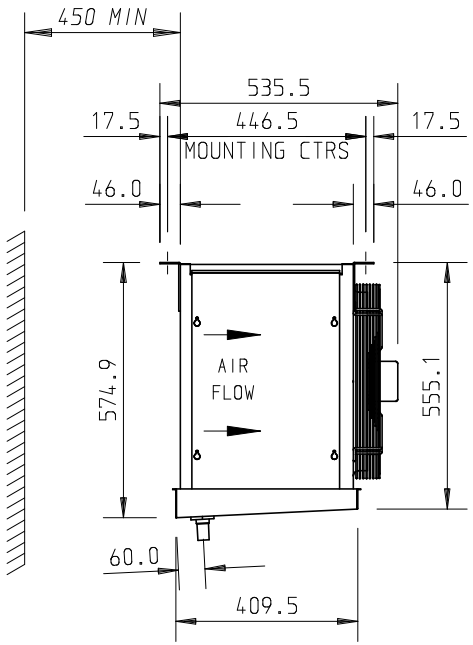

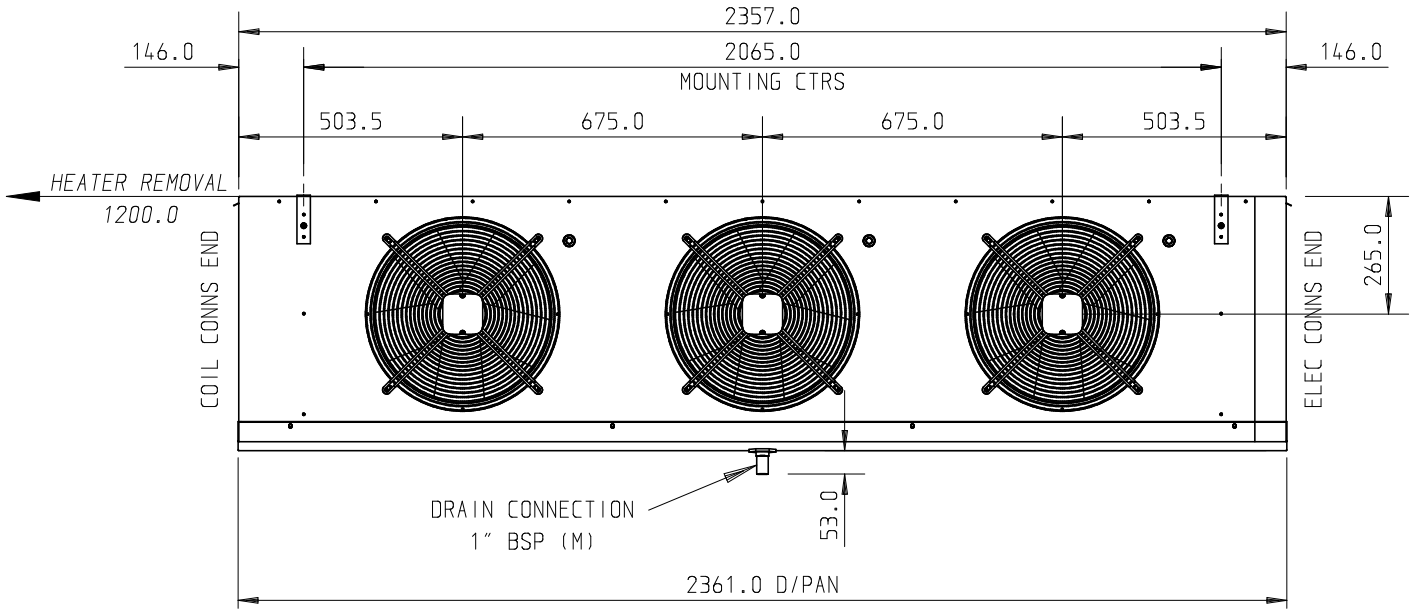

MOUNTING BRKT DETAIL

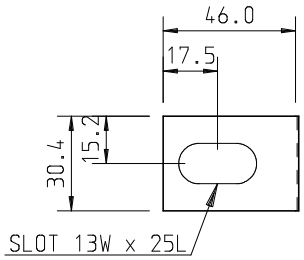

MOTORS	
ELEC SUPPLY	230V-1PH-50/60Hz
50Hz: 160W	4POLE 1410RPM(NOM)
60Hz: 240W	4POLE 1580RPM(NOM)
ELEC SUPPLY	400/430V-3PH-50/60Hz
50Hz: 135W	4POLE 1400RPM(NOM)
60Hz: 185W	4POLE 1650RPM(NOM)

STANDARD ELECTRIC DEFROST	
ELEC SUPPLY	380/420V-3PH-50/60Hz
COIL: 6 x HEATERS	" 800W EACH
TRAY: 3 x HEATERS	" 800W EACH
"HEAVY" ELECTRIC DEFROST	
ELEC SUPPLY	380/420V-3PH-50/60Hz
COIL: 10 x HEATERS	" 800W EACH
TRAY: 3 x HEATERS	" 800W EACH

ISS	MODIFICATION	SCN	DATE

TOLERANCES ASSEMBLY UNLESS OTHERWISE STATED
SIMPLE ASSY'S (2 to 3 Parts) ±1.0mm
COMPLEX ASSY'S (Multiple Parts) ±3.0mm

MATERIAL | FINISH

searle MANUFACTURING COMPANY
NEWGATE LANE FAREHAM HANTS PO14 1AR

DATE	SCALE	PART	PART No.	ISS
03/10/08	1:12	SALES OUTLINE KME115 / 140		01

DRAWN	CHECKED	FOR	JOB No.	DRG. FILE REF
TDB	TDB	N/A	N/A	KME115-140.01

A3 DO NOT SCALE THIRD ANGLE PROJECTION IF IN DOUBT ASK

" This document is protected by copyright, and the design it contains is protected by both copyright and design right, all such rights being owned by ICG (UK) Limited. This document may also contain information which is confidential to that Company. Neither this document nor the design or information which it contains may therefore be used, sold, licensed, transferred, copied, lent, disclosed to any third party or otherwise reproduced in whole or in part in any manner or form other than with the prior written consent of that Company.

© [20] ICG (UK) Limited. All Rights Reserved."

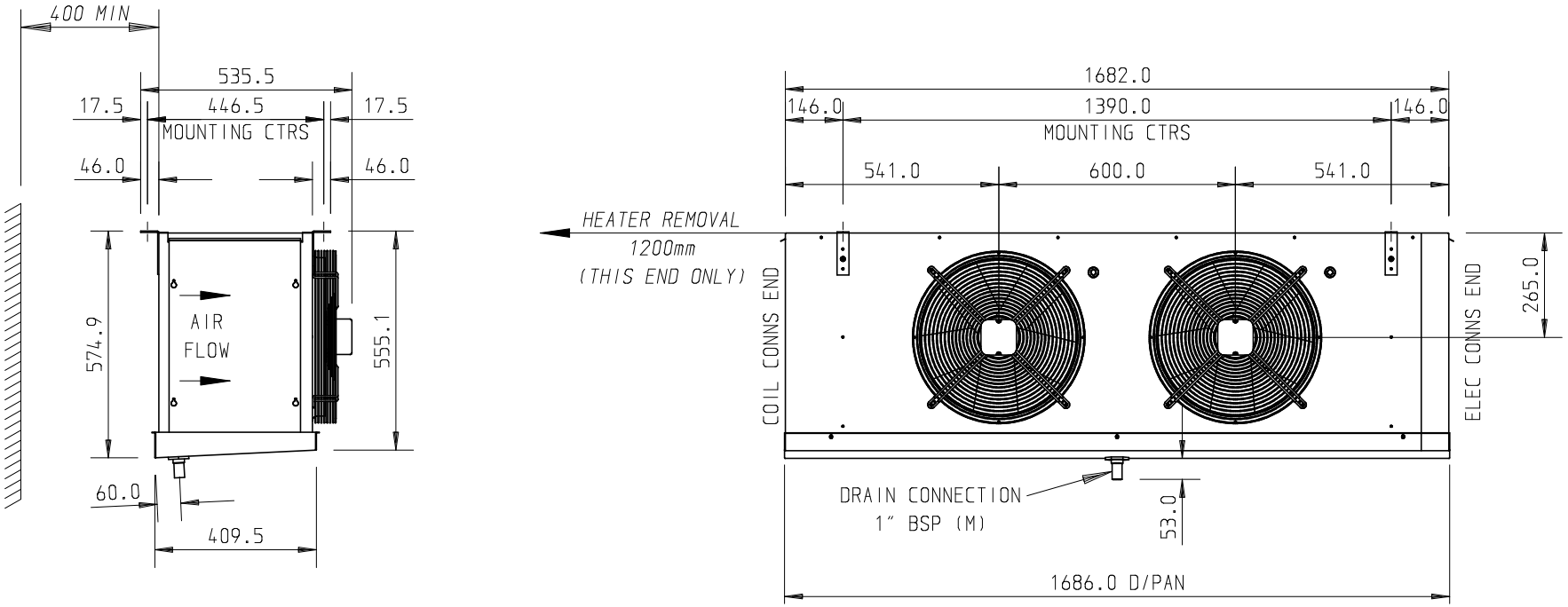

MOUNTING BRKT DETAIL

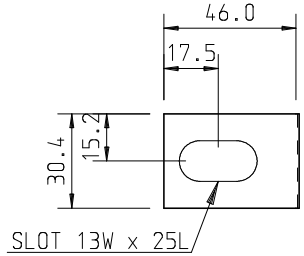

MOTORS			
ELEC SUPPLY	230V-1PH-50/60Hz		
50Hz: 160W	4POLE	1410RPM(NOM)	
60Hz: 240W	4POLE	1580RPM(NOM)	
ELEC SUPPLY	400/430V-3PH-50/60Hz		
50Hz: 135W	4POLE	1400RPM(NOM)	
60Hz: 185W	4POLE	1650RPM(NOM)	

STANDARD ELECTRIC DEFROST	
ELEC SUPPLY	380/420V-3PH-50/60Hz
COIL: 3 x HEATERS @	1080W EACH
TRAY: 3 x HEATERS @	530W EACH
"HEAVY" ELECTRIC DEFROST	
ELEC SUPPLY	380/420V-3PH-50/60Hz
COIL: 5 x HEATERS @	1080W EACH
TRAY: 3 x HEATERS @	530W EACH

ISS	MODIFICATION	SCN	DATE

TOLERANCES ASSEMBLY UNLESS OTHERWISE STATED
SIMPLE ASSY'S (2 to 3 Parts) ±1.0mm
COMPLEX ASSY'S (Multiple Parts) ±3.0mm

MATERIAL | FINISH

searle MANUFACTURING COMPANY
NEWGATE LANE FAREHAM HANTS PO14 1AR

DATE	SCALE	PART	PART No.	ISS
07/10/08	1:12	SALES OUTLINE KME80 & KME95		01

DRAWN	CHECKED	FOR	JOB No.	DRG. FILE REF
TDB	TDB	N/A	N/A	KME80-95.01

A3 DO NOT SCALE THIRD ANGLE PROJECTION IF IN DOUBT ASK

" This document is protected by copyright, and the design it contains is protected by both copyright and design right, all such rights being owned by ICG (UK) Limited. This document may also contain information which is confidential to that Company. Neither this document nor the design or information which it contains may therefore be used, sold, licensed, transferred, copied, lent, disclosed to any third party or otherwise reproduced in whole or in part in any manner or form other than with the prior written consent of that Company.

© [20] ICG (UK) Limited. All Rights Reserved."

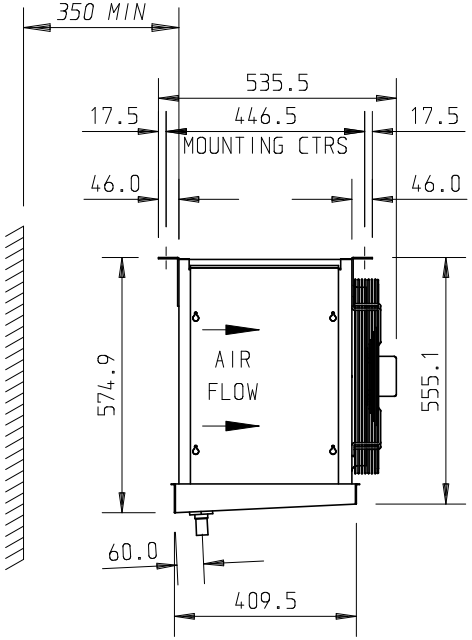

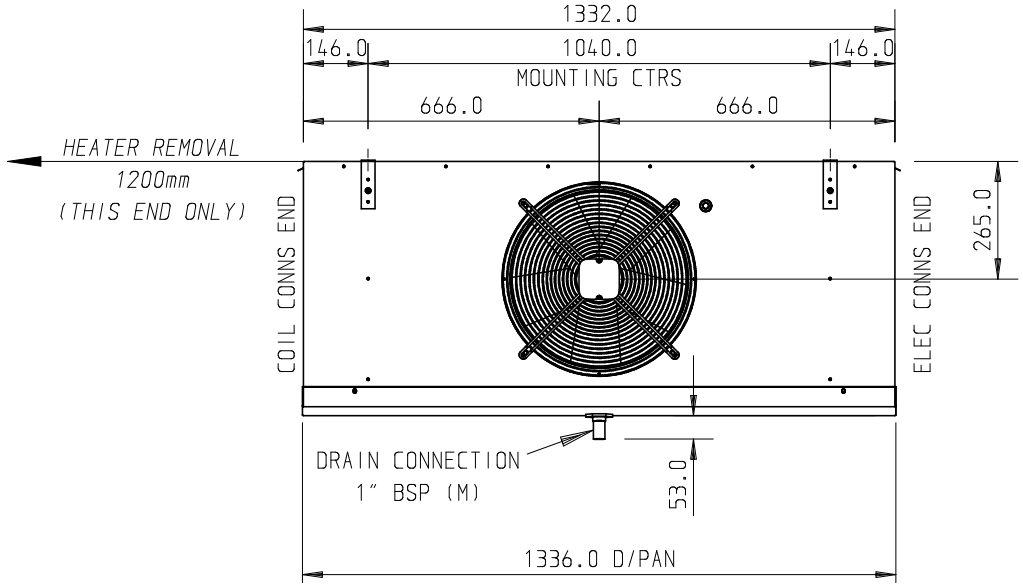

MOUNTING BRKT DETAIL

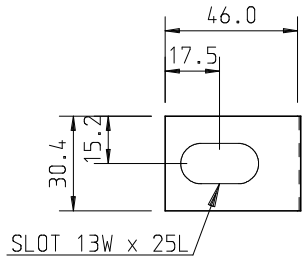

MOTORS	
ELEC SUPPLY	230V-1PH-50/60Hz
50Hz: 160W	4POLE 1410RPM(NOM)
60Hz: 240W	4POLE 1580RPM(NOM)
ELEC SUPPLY	400/430V-3PH-50/60Hz
50Hz: 135W	4POLE 1400RPM(NOM)
60Hz: 185W	4POLE 1650RPM(NOM)

STANDARD ELECTRIC DEFROST	
ELEC SUPPLY	380/420V-3PH-50/60Hz
COIL: 3 x HEATERS "	800W EACH
TRAY: 3 x HEATERS "	400W EACH

"HEAVY" ELECTRIC DEFROST	
ELEC SUPPLY	380/420V-3PH-50/60Hz
COIL: 5 x HEATERS "	800W EACH
TRAY: 3 x HEATERS "	400W EACH

ISS	MODIFICATION	SCN	DATE

TOLERANCES ASSEMBLY UNLESS OTHERWISE STATED
SIMPLE ASSY'S (2 to 3 Parts) ±1.0mm
COMPLEX ASSY'S (Multiple Parts) ±3.0mm

MATERIAL | FINISH

searle MANUFACTURING COMPANY
NEWGATE LANE FAREHAM HANTS PO14 1AR

DATE	SCALE	PART	PART No.	ISS
03/10/08	1:12	SALES OUTLINE KME60		01

DRAWN	CHECKED	FOR	JOB No.	DRG. FILE REF
TDB	TDB	N/A	N/A	KME60.01

A3 DO NOT SCALE THIRD ANGLE PROJECTION IF IN DOUBT ASK

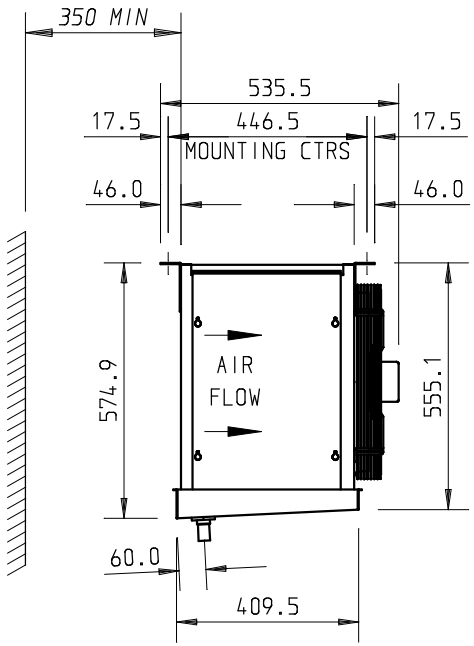

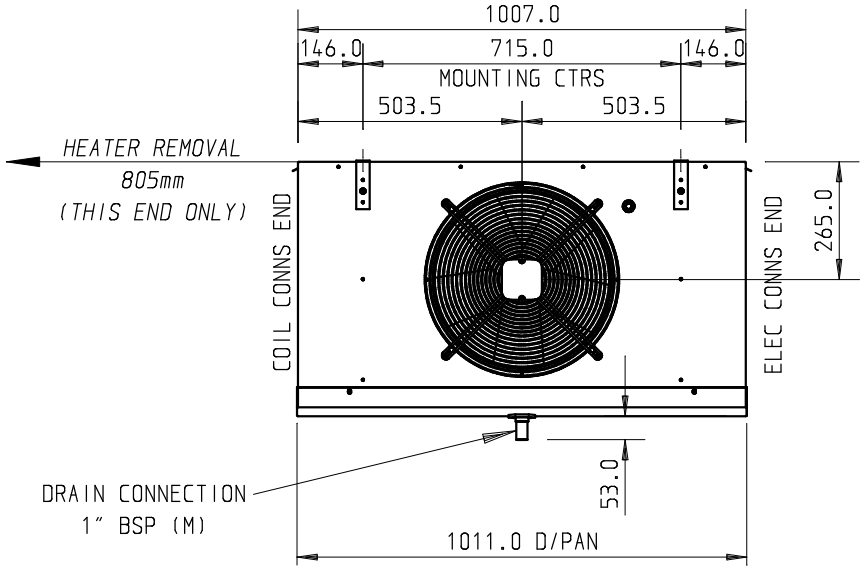

MOUNTING BRKT DETAIL

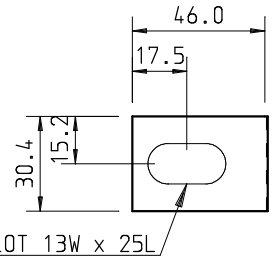

APPROX WEIGHTS KGS (INCL HTRS)		COIL CONNECTION SIZES	
UNIT/ MODEL	COIL MATERIAL (TUBE-FIN) CU-AL	INLET O.D. STUB	OUTLET O.D. STUB
KM50-6	83	1/2"	1.1/8"

MOTORS

~~ELEC SUPPLY 230V-1PH-50/60Hz~~
~~50Hz: 160W 4POLE 1410RPM(NOM)~~
~~60Hz: 240W 4POLE 1580RPM(NOM)~~

ELEC SUPPLY 400/430V-3PH-50/60Hz
50Hz: 135W 4POLE 1400RPM(NOM)
~~60Hz: 185W 4POLE 1650RPM(NOM)~~

STANDARD ELECTRIC DEFROST
ELEC SUPPLY 380/420V-3PH-50/60Hz

TRAY: 3 x HEATERS ¨ 265W EACH

ISS	MODIFICATION	SCN	DATE

TOLERANCES ASSEMBLY UNLESS OTHERWISE STATED
SIMPLE ASSY'S (2 to 3 Parts) ±1.0mm
COMPLEX ASSY'S (Multiple Parts) ±3.0mm

MATERIAL

FINISH

GEA Searle

© GEA Searle - All Rights Reserved
"This document is protected by copyright, and the design it contains is protected by both copyright & design right. All such rights being owned by GEA Searle. This document may also contain information which is confidential to that Company. Neither this document nor the information contained within it may be disclosed or used, in whole or in part, for any purpose unless with the prior written consent of that Company, and may not be copied, lent, disclosed to any third party or otherwise be reproduced in whole or in part in any manner or form than with the prior written consent of that Company."

DATE	SCALE	PART	PART No.	ISS
09/03/12	1:12	KME50-6 HGEA 3PH 45BAR MOP 0.028" TUBE	KME50/5010256	01

DRAWN	CHECKED	FOR	JOB No.	DRG. FILE REF
SS	SS	STAR REFRIGERATION	N/A	20-050-10256.01

A3 DO NOT SCALE THIRD ANGLE PROJECTION IF IN DOUBT ASK

" This document is protected by copyright, and the design it contains is protected by both copyright and design right, all such rights being owned by ICG (UK) Limited. This document may also contain information which is confidential to that Company. Neither this document nor the design or information which it contains may therefore be used, sold, licensed, transferred, copied, lent, disclosed to any third party or otherwise reproduced in whole or in part in any manner or form other than with the prior written consent of that Company.

© [20] ICG (UK) Limited. All Rights Reserved."

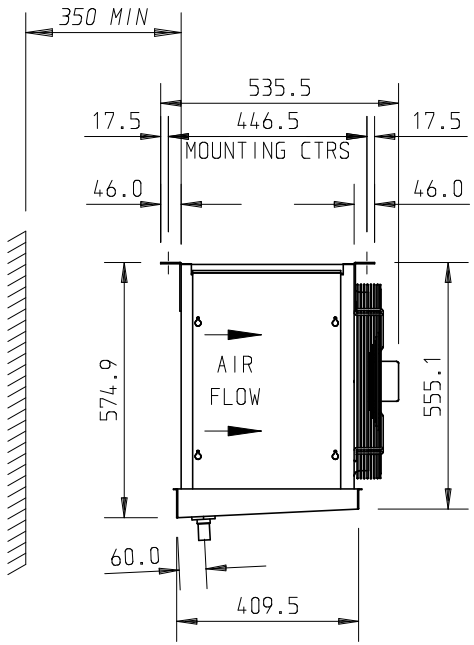

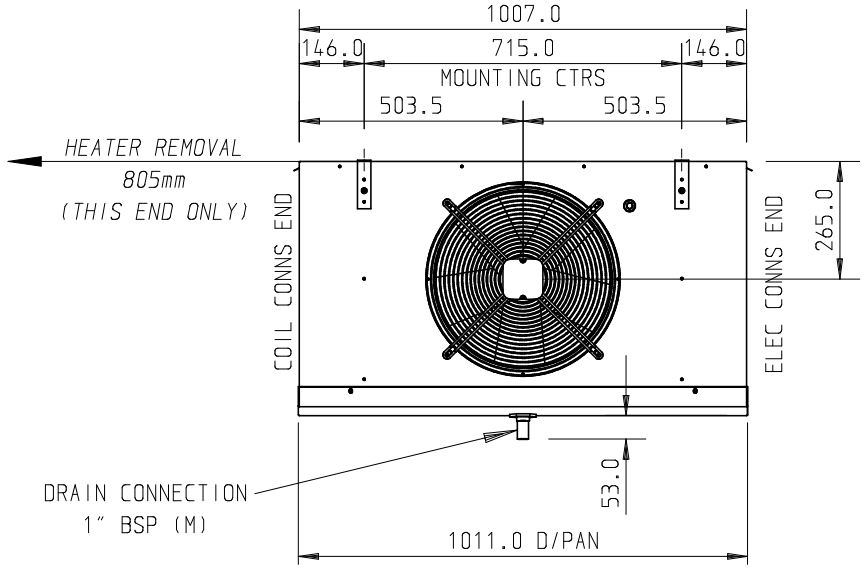

MOUNTING BRKT DETAIL

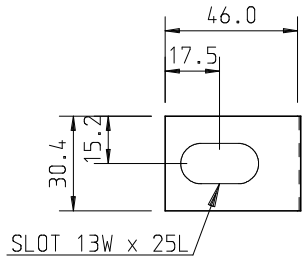

MOTORS			
ELEC SUPPLY	230V-1PH-50/60Hz		
50Hz:	160W	4POLE	1410RPM(NOM)
60Hz:	240W	4POLE	1580RPM(NOM)
ELEC SUPPLY	400/430V-3PH-50/60Hz		
50Hz:	135W	4POLE	1400RPM(NOM)
60Hz:	185W	4POLE	1650RPM(NOM)

STANDARD ELECTRIC DEFROST	
ELEC SUPPLY	380/420V-3PH-50/60Hz
COIL:	3 x HEATERS " 530W EACH
TRAY:	3 x HEATERS " 265W EACH

"HEAVY" ELECTRIC DEFROST	
ELEC SUPPLY	380/420V-3PH-50/60Hz
COIL:	5 x HEATERS " 530W EACH
TRAY:	3 x HEATERS " 230W EACH

ISS	MODIFICATION	SCN	DATE

TOLERANCES ASSEMBLY UNLESS OTHERWISE STATED
SIMPLE ASSY'S (2 to 3 Parts) ±1.0mm
COMPLEX ASSY'S (Multiple Parts) ±3.0mm

MATERIAL

FINISH

searle MANUFACTURING COMPANY
NEWGATE LANE FAREHAM HANTS PO14 1AR

DATE	SCALE	PART	PART No.	ISS
03/10/08	1:12	SALES OUTLINE KME50		01

DRAWN	CHECKED	FOR	JOB No.	DRG. FILE REF
TDB	TDB	N/A	N/A	KME50.01