

GEA Searle Cooler Range

Top-level engineering solutions

engineering for a better world

GEA Heat Exchangers









GEA Searle Products and Services

Centre of excellence

Air cooler - With the increasing importance of energy efficiency, GEA Searle coolers utilise fansets which offer significant energy savings over traditional motor assemblies. The KEC & TEC coolers have high efficiency EC fans as standard across the range. All our commercial unit coolers have white powder coated galvnised steel casing and are available in high or low temperature versions, with CO_2 and glycol circuiting options. Many of the models in the commercial unit cooler ranges are available ex-stock from your local distributor, with backup stocks held at the UK manufacturing plant centre.

Research and Development - In order to guarantee the continued excellence of our products in terms of innovation, design and performance, GEA has invested in one of the most comprehensive Research & Development facilities in the European refrigeration industry. GEA also undertakes special projects on behalf of other manufacturers, customers and end-users. In our R&D testing facilities Searle and Küba are able to test for the following performance characteristics: duty (kW), air flow (m^3/hr), motor performance and noise.

Eurovent Certification - This Europe-wide scheme provides a single, common, voluntary performance certification programme for heat exchangers. The scheme is managed by a separate, autonomous organisation - the Eurovent Certification Company - which carries out independent testing against agreed European/International standards. This ensures that the actual performance of certified products matches the claimed performance.

Engineering Facilities - The advanced Computer Aided Design system interfaces directly with production machinery allowing customer "special" products to be designed and manufactured in the shortest possible time. In addition, the production processes are fully computerised, being driven by the latest MRPII practices. GEA also operates a number of other World Class systems to reduce lead times and provide customers with better Information :- 3D Design, CAD-CAM, and Product Data Management (PDM)

Motors, Fansets & EC Fans - GEA Searle selects the optimum combination of motors and fans to deliver the best performance for the cooler size and application range. All motors and fansets are verified for power input and air volume in our Research & Development department. Specific motor data details are provided in the relevant section for each cooler type. EC fansets offer the optimum in energy efficient performance combined with low noise levels and high reliability. The KEC and TEC Cooler range uses EC fansets as standard making them the most energy efficient cooler products available. Energy usage can be less than 50% of that of similar products, resulting in a product with a reduced payback period. Additional benefits include;- Internal motor protection, Long service life and High efficiency across the full operating range.

Product Selection Software

Intelligence in cooling

The GEA Searle Product Selector provides an electronic catalogue covering the majority of product ranges offered by GEA Searle. The range of products available to you is very broad with many options. This software provides the fastest and easiest way to select the most appropriate product for your specific needs. GEA Searle Product Selector has been completely revised to run on the latest versions of Windows (including both 32-bit and 64-bit versions of Vista and Windows 7).

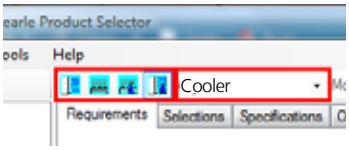

Fig 1

All four product types (Coolers, Condensers, Dry Coolers and Glycol Coolers) are now available in a single program. You can select the type of product either by clicking the icons which may be familiar to users of older versions of the program or by selecting the product type from the drop-down list. (Fig 1)



Fig 2

If you know the model number or the range you require (for example RF or RF-NB103), you can type this into the box next to the Select button. This will make the selection faster and exclude models which may not be relevant for your needs. This box will also accept wildcard characters, for example KEC*-4*. (Fig 2)

You can start a selection by clicking the Select button, by pressing F9 or by pressing Enter, and produce PDF or Excel files of your selection results. (Fig 3) The program normally operates using SI units. On the requirements screen you can choose alternative units by clicking (or right-clicking) on any unit (such as kW) to display a menu of alternative units.



Fig 3

What is important to you? - You can decide which features of the product are most important for each application: energy efficiency, footprint (physical size) and price. You adjust the slider controls to indicate the relative importance to you of each of these three elements. You can also choose to display all possible models, or just the 'top 10' which best meet your selection criteria. Once the selected models are displayed, the 'best' options in each category (energy efficiency, footprint and price) will be highlighted in yellow. (Fig 4)

These notes provide basic usage information for the March 2013, release of the GEA Searle Product Selector, version 3.5. For a more detailed overview of this new version of the software, please download the GEA Searle Product Selector from www.gea-heatexchanger.com or call your local sales representative.



Fig 4

Quality, Support and Website - Trained staff will advise you through every step of the selection process. Our customer service continues past the product delivery, and we are always on hand to advise on any issues. Keep up to date with our products and latest news by visiting the website, www.gea-heatexchanger.com

TEC Air cooler

Intelligence in cooling



The Searle range of commercial unit coolers combine versatility and aesthetic design with consistent performance to offer the ideal cooler at a competitive price. They are typically the 1st choice product for the following applications due to their proven design and reliability :- Cold rooms, Food storage, Food preparation and Cool cabinets.

TEC is a range of nine small 'blow through' unit coolers With a wide operating range + 10 ℃ to -40 ℃, the coolers are suitable for both high, medium and low temperature applications in areas such as reach-in and walk - in cold cabinets, small cold rooms and similar situations. The range has 1, 2 or 3 fan configurations, can be either ceiling mounted or wall mounted (by using the optional wall mounting kit). The pleasing aesthetic design of the coolers, manufactured in galvanised steel and finished with oven cured white epoxy powder paint, complements the working environment as well as providing rigidity and excellent corrosion resistance.

The fansets are secured to the hinged fan plate, which can be lowered to provide access to all refrigeration piping and electrical connections and components. Nominal capacities are from 0.52kW to 3.4kW (Standard Condition 2) when used with low ozone depletion refrigerants such as R134a, R404A and R507A. The EC fans are high efficiency, having a power input of only 20W, a 70% saving on typical shaded pole motors used on this type of cooler. Motors are suitable for 230V, single phase, 50 / 60 Hz supply, and have internal thermal protection. Fans are pre-wired to an internal junction box with cable entry to the cooler being provided via one of several knock-outs.

Coils are manufactured from 3/8" OD copper tube (internally grooved to provide an extended inner surface) and aluminium fins of type 'E'. The copper tube is mechanically extended to provide a tight interference fit between the aluminium fin collar and the copper tube, thus giving excellent heat transfer characteristics. The units are available in two fin spacing's 3.6mm (7 fpi) and 5.1mm (5 fpi). Models TEC1, TEC2 and TEC3 have a single circuit and are suitable for use with an internally equalised expansion valve. Models TEC3.5 to TEC8 are multi - circuited and require an externally equalised expansion valve. All coils are pressure tested to 35.8 bar.

TEC - blow through unit coolers

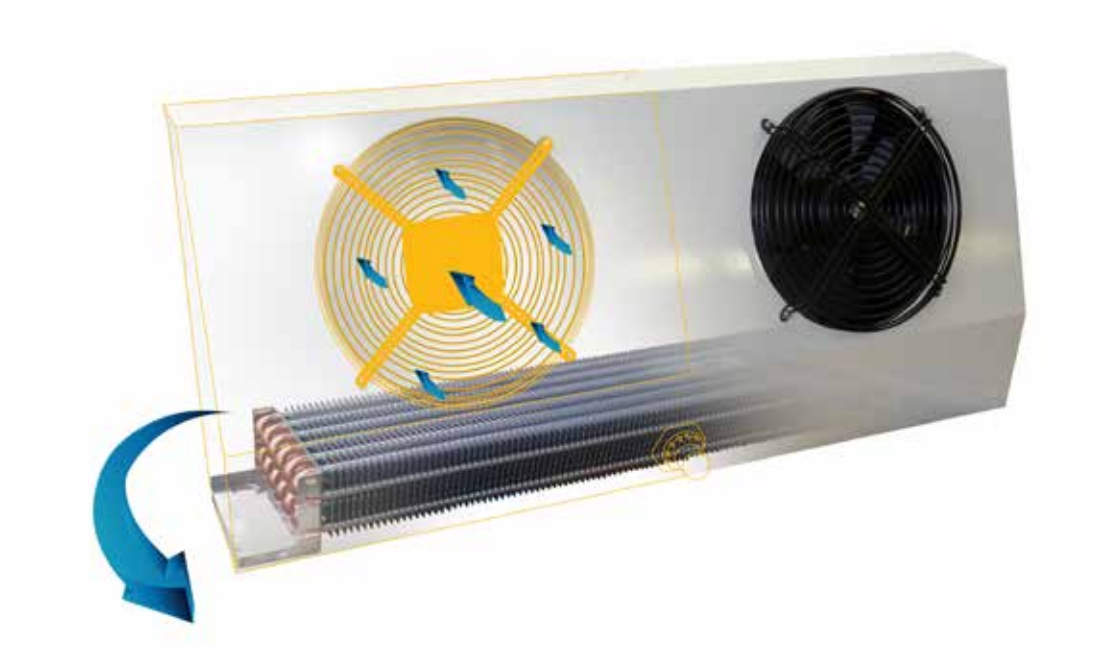

1	2				
TEC	4	-	5	60	Al
			3	4	5

1. Range: TEC
2. Model: 1, 2, 3, 3.5, 4, 5, 6, 7, 8
3. Fin spacing: 5 FPI (5.1mm), 7FPI (3.6mm)
4. Supply frequency: Blank = 50Hz, 60 = 60Hz
5. Fin material: AL = Aluminium

Refrigerant data

Refrigeration	R404A	R134a	R507A	R407A/F	R407C
Capacity factor (dew point, DT1)	1.00	0.91	0.97	1.18*	1.35*
Refrigerant charge density (kg/dm3)	0.312	0.338	0.313	0.332	0.332

TEC Selection Data

	Model	Capacity kW SC2	Fanset and Motor				Total surface area	Internal Volume	Optional electric defrost	
		R404A	Air volume	Air throw (***)	Power Input †	Noise level (**)			Ceiling mount	Wall mount
			m^3/s	m	W	dBA	m^2	dm^3	W	W
7 FPI (3.6mm)	TEC1-7	0.57	0.15	4.5	20	51	1.5	0.39	1 x 275	2 x 250
	TEC2-7	0.89	0.15	4.5	20	50	2.9	0.79	1 x 550	2 x 250
	TEC3-7	1.04	0.15	5.0	20	50	4.1	1.06	1 x 700	2 x 325
	TEC3.5-7	1.25	0.16	5.0	20	50	5.4	1.35	1 x 900	2 x 425
	TEC4-7	1.72	0.26	5.0	40	53	5.4	1.35	1 x 900	2 x 425
	TEC5-7	2.04	0.3	5.5	40	52	7.3	1.76	1 x 1000	2 x 575
	TEC6-7	2.29	0.32	5.5	40	51	9.7	2.34	1 x 1000	2 x 675
	TEC7-7	3.02	0.45	6.0	60	54	10.3	2.42	1 x 1400	2 x 1030
	TEC8-7	3.4	0.48	6.0	60	53	13.8	3.23	1 x 1400	2 x 1030
5 FPI (5.1mm)	TEC1-5	0.52	0.16	4.5	20	51	1.1	0.39	1 x 275	2 x 250
	TEC2-5	0.84	0.15	4.5	20	50	2.2	0.79	1 x 550	2 x 250
	TEC3-5	1.00	0.16	5.0	20	50	3.1	1.06	1 x 700	2 x 325
	TEC3.5-5	1.15	0.17	5.0	20	50	4.1	1.35	1 x 900	2 x 425
	TEC4-5	1.61	0.28	5.0	40	53	4.1	1.35	1 x 900	2 x 425
	TEC5-5	1.89	0.31	5.5	40	52	5.4	1.76	1 x 1000	2 x 575
	TEC6-5	2.14	0.34	5.5	40	51	7.3	2.34	1 x 1000	2 x 675
	TEC7-5	2.76	0.47	6.0	60	54	7.7	2.42	1 x 1400	2 x 1030
	TEC8-5	3.18	0.5	6.0	60	53	10.3	3.23	1 x 1400	2 x 1030

Notes:

* Capacity quoted at Standard Condition 2 (-8°C saturated suction temperature, 0°C air entering), † Total Power Input at Standard Condition 2

For further information please contact your sales representative or refer to the selection software online at www.searle.co.uk

TEC Cooler DT1 - WET

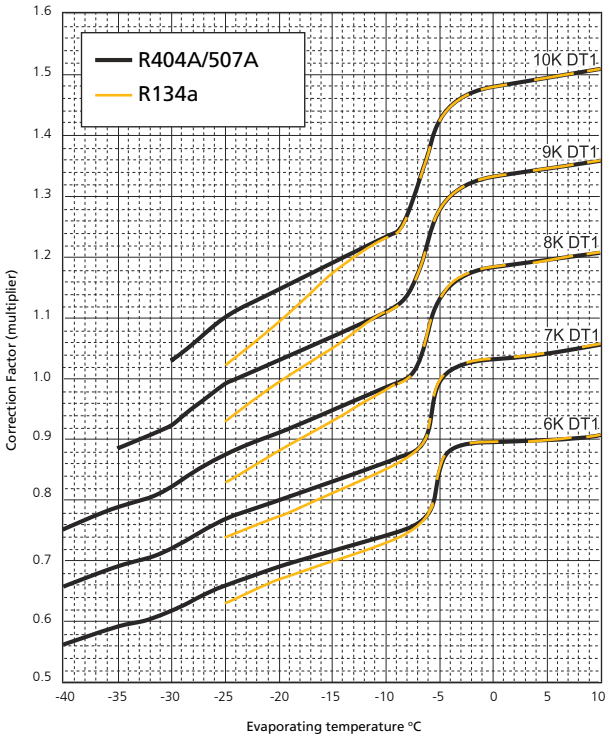

Correction Factors

(Multiply capacity by appropriate correction factor to give performance at chosen conditions)

Rating Conditions

The duties shown in this brochure are at EN 328 Standard Condition 2 (-8°C saturated suction temperature, 0°C air entering). For data on refrigerants not shown, please contact your supplier. **Note:** For R407, DT1 is calculated from mid point evaporating temperature.

Options - Part numbers of options supplied separately

Defrost kits								
Part type/ Description	TEC1 TEC2	TEC2	TEC3.5/4 TEC4	TEC5	TEC6	TEC7	TEC8
Ceiling Mounting	T2 LTKIT	T3 LTKIT	T3.5/4	T5/6LTKIT		T7/8LTKIT	
Wall Mounting	WT1/2LTKIT	WT3 LTKIT	WT3.5/4	WT5 LTKIT	WT6 LTKIT	WT7/8	
Wall mounting kits	WT1/2 PAN	WT3 PAN	WT3.5/4 PAN	WT5 PAN	WT6 PAN	WT7 PAN	WT8 PAN

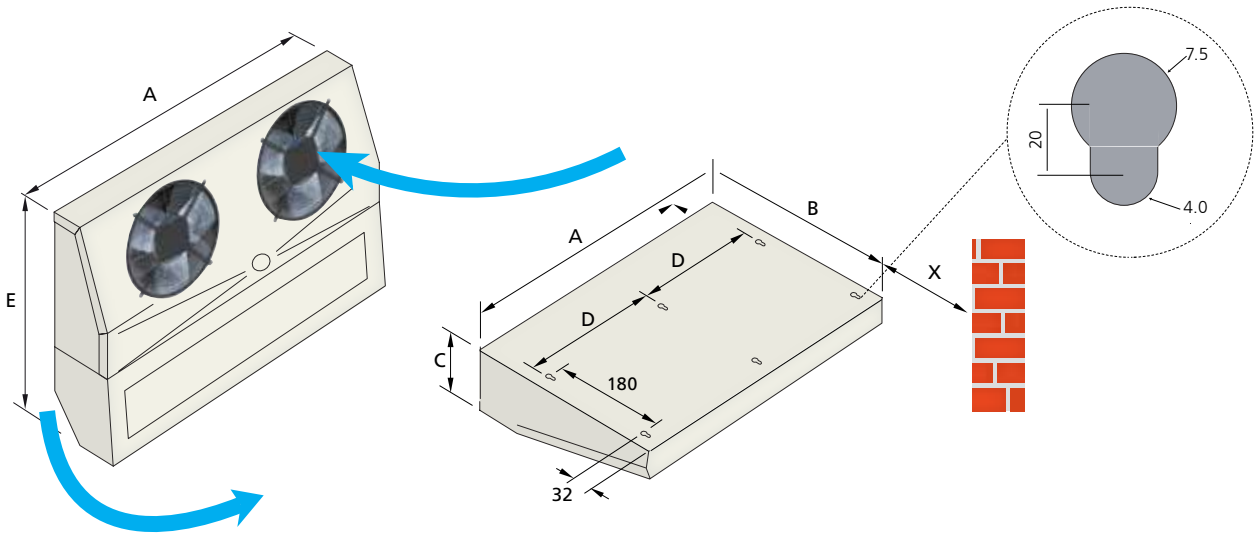

Diagram shows optional drain pan when unit is wall mounted

TEC Dimensions

Model	No of fans	mm						Connections		Approx dry weight (kg)
		A	B	C	D	E	X Min	Outlet Inches	Inlet Inches	
TEC1	1	525	375	180	453 (x4)	550	120	3/8	3/8	7.3
TEC2	1	525	375	180	453 (x4)	550	120	3/8	3/8	8.2
TEC3	1	690	375	180	618 (x4)	550	120	3/8	3/8	9.8
TEC3.5	1	865	375	180	793 (x4)	550	120	1/2	3/8	12.0
TEC4	2	865	375	180	793 (x4)	550	120	1/2	3/8	13.7
TEC5	2	1120	375	180	524 (x6)	550	120	1/2	3/8	16.4
TEC6	2	1120	375	230	524 (x6)	550	120	5/8	1/2	18.5
TEC7	3	1528	375	180	728 (x6)	550	120	7/8	1/2	24.0
TEC8	3	1528	375	230	728 (x6)	550	120	7/8	1/2	26.9

KEC Air cooler

High-performance low cost in cooling



With the new KEC range, Searle is ushering in a new generation of environment friendly 1.2-9.9kW unit coolers built exclusively around low noise, high efficiency EC fansets. Specially developed for cold rooms and cool cabinets, the KEC range offers impressive energy and cost savings – each fanset saves £100 a year on energy costs, significantly reducing the payback period.

The GEA Searle KEC cooler is the next generation of Unit Cooler, with market leading performance, noise levels and energy efficiency. Using EC Technology as standard across the range, the power input for the KEC cooler is typically 50% that of other cooler motors. The KEC coolers cover a capacity range from 1.2 – 10.7kW and are ideally suited for cold room applications and cool cabinets.

The range has a modern aesthetic design and is easy to install and maintain. A range of refrigerants, can be selected using selection software. Software can be obtained as a CD from your Searle representative or downloaded from our website www.gea-heatexchangers.com. The KEC defrost system has been significantly improved to offer more even defrosting. This is achieved using a greater number of elements which operate at lower temperatures and therefore minimises steaming, whilst also effecting a shorter defrost cycle.

The KEC utilises the unique GEA Searle 'D' fin which has been specifically developed for refrigeration applications and maximise the periods between defrosts. The 'D' fin incorporates 1/2" outside diameter tube with extended inner surface - 'rifle bore' - to maximise performance and balance the requirements of high efficiency heat transfer with the need to have secondary surface on which to deposit frost and maximise the periods between defrost.

KEC Cooler DT1 - WET

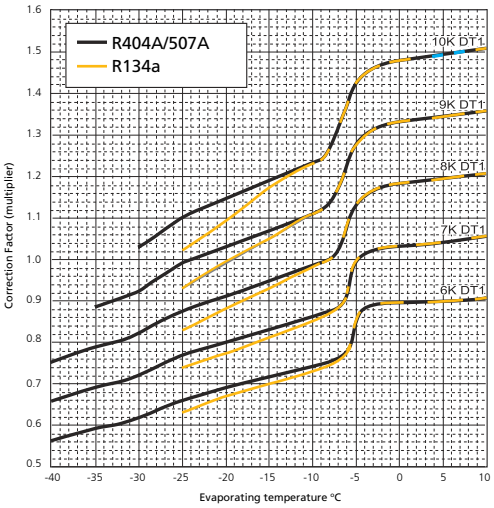

All coils are tested to 35.8 bar unless otherwise stated. The fansets used in the KEC are all 300mm EC fansets with internal thermal protection and are flush mounted within the casing providing a clean fascia. The KEC10, KEC15, KEC20 and KEC35 all utilise motors with 33W power input with the remainder of the range using motors with 77W power input. All are rated at IP44+ with an operating temperature range of –40°C to +40°C and can accept 196-253V 1PH power at 50/60Hz.

KEC - Unit cooler

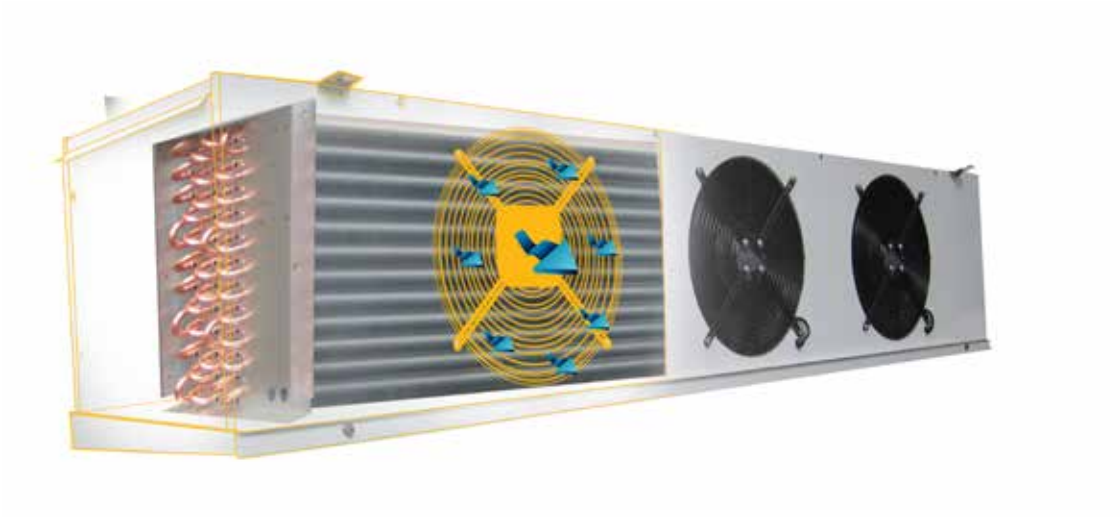

1	2				
KEC	35	-	4	L	Al
			3	4	5

1. Range:	KEC
2. Model:	10, 15, 20, 25, 30, 40, 45, 55, 70
3. Fin spacing:	4mm, 6mm, 8mm
4. Defrost:	Blank = No defrost,
	L = Standard Electric defrost,
	HG = Hot gas,
	D = Coil & tray/ E = Electric tray,
	A/ B / C / D = Type
5. Fin material:	AL = Aluminium
(Coil:	Blank = HCFC, GLY = Glycol)

Refrigerant data

Refrigeration	R404A	R134a	R507A	R407A/F	R407C
Capacity factor (dew point, DT1)	1.00	0.91	0.97	1.18*	1.35*
Refrigerant charge density (kg/dm3)	0.312	0.338	0.313	0.332	0.332

* Capacity factors for refrigerants with high glide apply only at the nominal rating condition. Refrigerant charge densities are based on 25% of the internal volume being liquid.

Correction factors

(Multiply capacity by appropriate correction factor to give performance at chosen conditions) Note: For R407, DT1 is calculated from mid point evaporating temperature.

KEC - selection data

	Model	Capacity kW 8K DT1 (SC2)*	Air volume	Coil data					
				Total surface area	Internal volume	Ref charge	Connections		Dry weight
		R404A	m^3/s	m^2	dm^3	kg	Inlet	Outlet	kg
4mm	KEC10-4	1.65	0.28	8.5	1.4	0.45	1/2"	1/2"	27
	KEC15-4	2.01	0.28	10.0	1.9	0.61	1/2"	1/2"	28
	KEC20-4	2.35	0.29	13.7	2.5	0.84	1/2"	5/8"	33
	KEC25-4	3.00	0.42	13.7	2.5	0.84	1/2"	5/8"	33
	KEC25-4	3.73	0.40	20.5	3.8	1.23	1/2"	7/8"	35
	KEC35-4	4.57	0.58	24.9	4.3	1.41	1/2"	7/8"	47
	KEC40-4	5.84	0.83	24.9	4.3	1.41	1/2"	7/8"	47
	KEC45-4	6.99	0.81	37.4	6.5	2.08	1/2"	7/8"	53
	KEC55-4	8.79	1.25	37.4	6.3	2.02	1/2"	7/8"	67
	KEC70-4	10.51	1.21	56.0	9.4	3.00	5/8	7/8"	74
6mm	KEC10-6	1.34	0.31	5.8	1.4	0.45	1/2"	1/2"	27
	KEC15-6	1.72	0.31	6.8	1.9	0.61	1/2"	1/2"	28
	KEC20-6	1.99	0.32	9.4	2.5	0.84	1/2"	5/8"	33
	KEC25-6	2.38	0.43	9.4	2.5	0.84	1/2"	5/8"	33
	KEC30-6	3.16	0.42	14.1	3.8	1.23	1/2"	7/8"	35
	KEC35-6	3.85	0.63	17.0	4.3	1.41	1/2"	7/8"	47
	KEC40-6	4.63	0.85	17.0	4.5	1.41	1/2"	7/8"	47
	KEC45-6	5.97	0.83	25.6	6.5	2.08	1/2"	7/8"	53
	KEC55-6	7.00	1.28	25.6	6.3	2.02	1/2"	7/8"	67
	KEC70-6	8.98	1.25	38.3	9.4	3.00	5/8	7/8"	74
8mm	KEC10-8	1.17	0.32	4.4	1.4	0.45	1/2"	1/2"	27
	KEC15-8	1.52	0.32	5.2	1.9	0.61	1/2"	1/2"	28
	KEC20-8	1.74	0.33	7.2	2.5	0.84	1/2"	5/8"	33
	KEC25-8	2.06	0.44	7.2	2.5	0.84	1/2"	5/8"	33
	KEC30-8	2.75	0.43	10.8	3.8	1.23	1/2"	7/8"	35
	KEC35-8	3.30	0.65	13.1	4.3	1.41	1/2"	7/8"	47
	KEC40-8	3.98	0.86	13.1	4.3	1.41	1/2"	7/8"	47
	KEC45-8	5.31	0.86	19.7	6.5	2.08	1/2"	7/8"	53
	KEC55-8	6.01	1.31	19.7	6.3	2.02	1/2"	7/8"	67
	KEC70-8	7.97	1.29	29.5	9.4	3.00	5/8	7/8"	74

Model	Fan and Motor specification							Electric defrost		
	No of fans	Speed	Air throw ***	Noise level **	230V - 1ph-50/60Hz			230V-1ph-50/60Hz		
					Total power †	F.L.C Amps per fan	SC Amps per fan	Standard		
								Coil	Pan	Total
		rpm	m	dB(A)	W	A	A	W	W	W
KEC10	1	1370	16	44	33	0.35	0.5	680	340	1020
KEC15	1	1370	16	44	33	0.35	0.5	680	340	1020
KEC20	1	1370	16	44	33	0.35	0.5	920	460	1380
KEC25	1	1750	22	52	77	0.70	1.0	920	460	1380
KEC30	1	1750	22	52	77	0.70	1.0	920	460	1380
KEC35	2	1370	16	47	66	0.35	0.5	1600	800	2400
KEC40	2	1750	22	55	154	0.70	1.0	1600	800	2400
KEC45	2	1750	22	55	154	0.70	1.0	1600	800	2400
KEC55	3	1750	22	57	231	0.70	1.0	2400	1200	3600
KEC70	3	1750	22	57	231	0.70	1.0	2400	1200	3600

Notes:

3Ph defrost option is avaliable on KEC 40, 45, 55 ,70

Rating conditions: The duties shown in this brochure are at EN 328 Standard Condition 2 (-8°C saturated suction temperature, 0°C air entering). For data on refrigerants not shown, please contact your supplier.

* DT1 is the difference between the entering air temperature and the saturated suction temperature at the outlet of the cooler.

** Noise levels are based on free field conditions at a distance of 3m. Actual noise levels will depend upon cold store construction, store loading and the number of coolers installed.

*** Terminal air velocity 0.25m/s, free air conditions at 10°C. Air throw cannot be considered on absolute value because many factors have a substantial effect on the distance achieved.

† Total Power Input at Standard Condition 2 (-8°C saturated suction temperature, 0°C air entering).

KEC 10 - 15

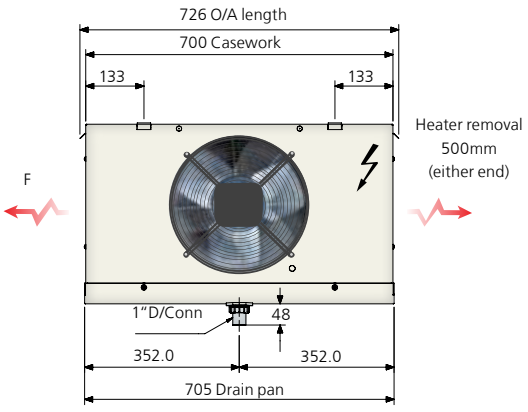

KEC 20 - 30

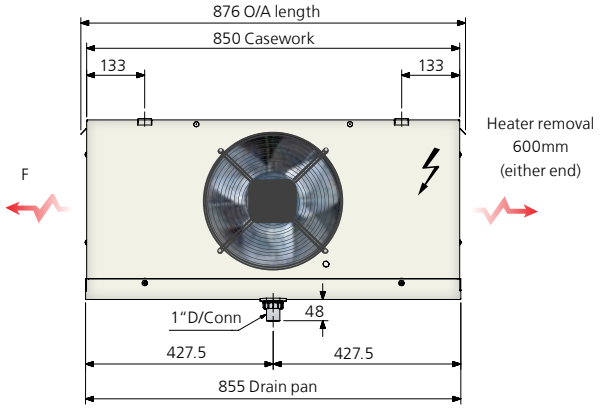

KEC35 - 45

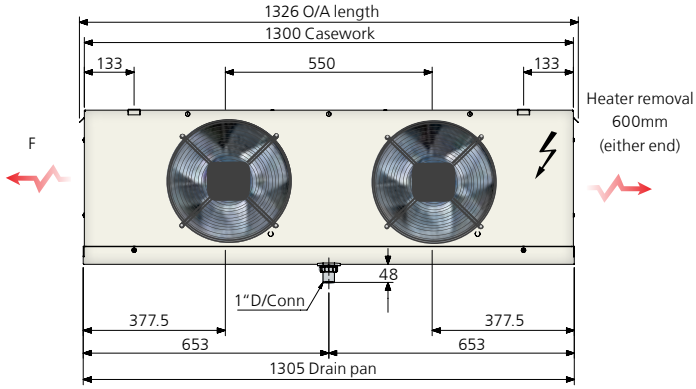

Hanging bracket for KEC Models

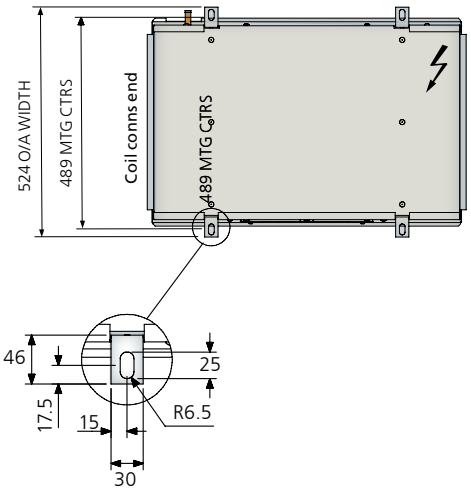

KEC55 - 70

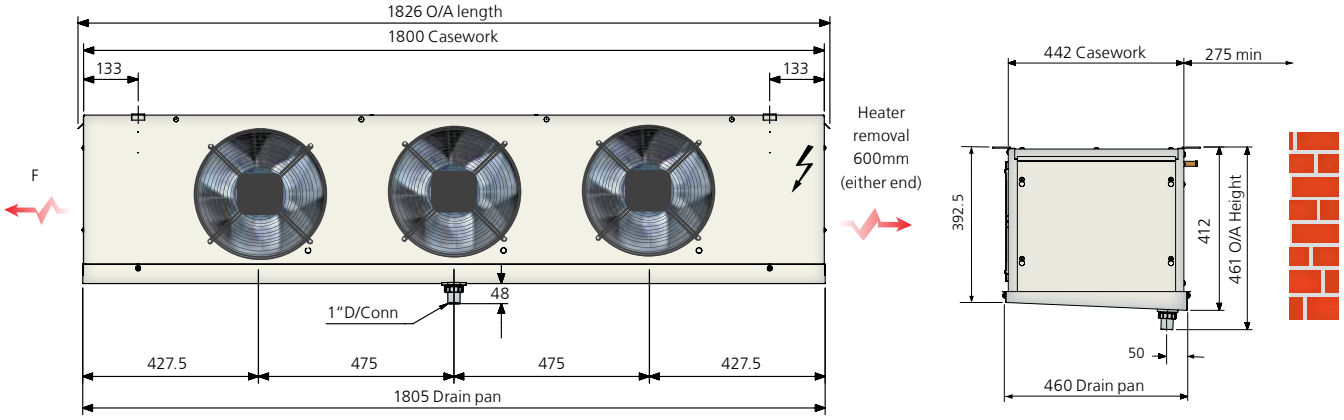

Note: Maintenance access require at both ends of unit All dimensions in mm, F' = Min heat Withdrawal

KMe Air cooler

Design thinking 'outside the freezebox'



With a pleasing aesthetic design constructed from robust steel this cooler is designed for energy conservation in mind and the combined effect of the fin design, low refrigerant charge and fan and motor selection, results in a very low power requirement.

GEA Searle has developed a green life cycle approach to the design and manufacture of refrigeration components. This ensures that in addition to looking as good in use as they do in our catalogue, our units have a worthwhile monetary value at the end of their service life. Effectively, we have engineered eventual recycling into our products when they are still on the drawing board. The KMe range of coolers is ideally suited to large cold rooms and small warehouses where an efficient solution is required. The KMe can also be used for industrial food processing and agricultural applications. To find the optimum model from the range it is recommended to use the Searle Selection Software. The KMe utilises the unique GEA Searle 'D' fin which has been specifically developed for refrigeration applications. The 'D' fin utilises ½" outside diameter tube with extended inner surface – 'rifle bore' – to maximise performance. It balances the requirements of high efficiency heat transfer with the need to have secondary surface on which to deposit frost and maximise the periods between defrosts. All coils are tested to 35.8 bar and have a maximum operating pressure of 20.7 bar unless otherwise stated.

KMe Options

- EC Fansets
- Air streamer: to extend the air throw of the standard 400mm fanset
- Forkguard: a guard system to prevent accidental damage from forklift trucks or similar when siting the cooler at low level.
- Axial fans: for significantly increased air throw or for external pressure of 120Pa.
- Peripheral Heaters: available in conjunction with axial fans, recommended for applications below 0°C.
- Fan plate Heaters
- Heavy Electric Defrost: comprises of additional coil block heaters to increase the total defrost load by approximately 40%
- Fan Plate Heaters: to prevent fan blade contact with frost build up at low temperatures.

KMe Cooler DT1 - WET

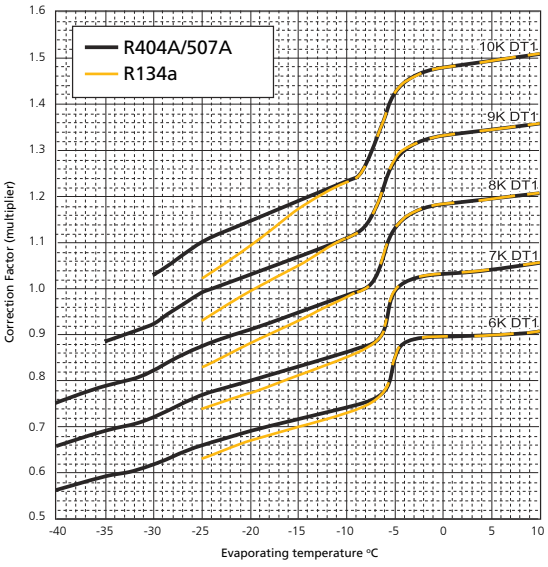

KMe - Unit cooler

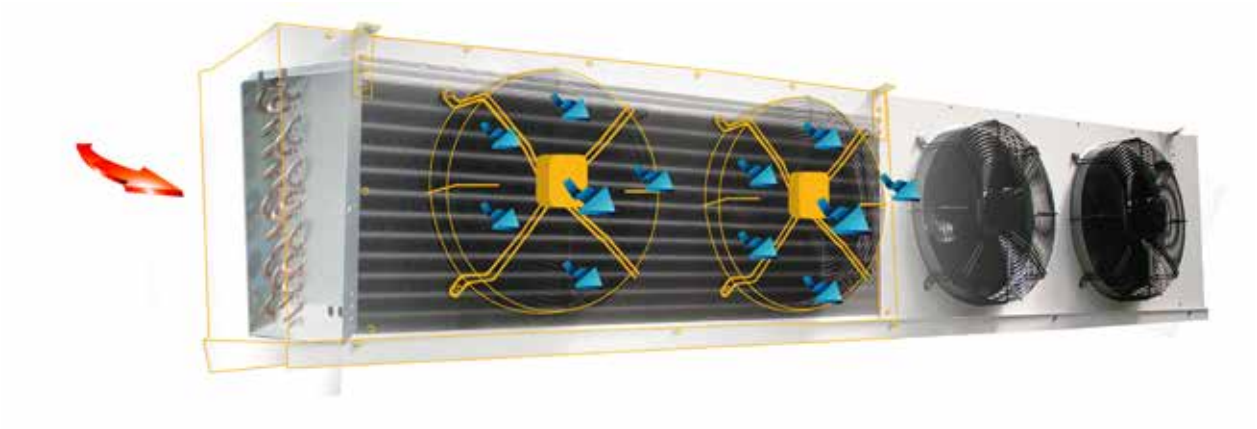

1	2		3	4										
KMe	140	-	6	L	-	Al	-	3PH	-	EC				
						5		6		7				

1. Range: KMe
2. Model: 50, 60, 80, 95, 115, 140, 175
3. Fin spacing: 4mm, 6mm, 8mm
4. Defrost: Blank = No defrost,
   L = Standard Electric defrost,
   HG = Hot gas,
   D = Coil & tray/ E = Electric tray,
   A/ B / C / D = Type
5. Fin material: AL = Aluminium
6. Electrical supply: Blank = 1PH, 3PH
7. Fanset option: Blank = Standard 400mm fanset,
   Ax = Axial, EC = EC fanset

Refrigerant data

Refrigeration	R404A	R134a	R507A	R407A/F	R407C
Capacity factor (dew point, DT1)	1.00	0.91	0.97	1.18*	1.35*
Refrigerant charge density (kg/dm3)	0.312	0.338	0.313	0.332	0.332

* Capacity factors for refrigerants with high glide apply only at the nominal rating condition. Refrigerant charge densities are based on 25% of the internal volume being liquid.

Correction factors

(Multiply capacity by appropriate correction factor to give performance at chosen conditions) Note: For R407, DT1 is calculated from mid point evaporating temperature.

	Model	Capacity kW 8K DT1 (SC2)*	Air volume	Coil data					
		R404A		Total surface area	Internal volume	Ref charge	Connections		Dry weight
			m^3/s	m^2	dm^3	kg	Inlet	Outlet	kg
4mm	KMe50-4	7.36	0.89	38.0	6.7	2.1	1/2"	1 1/8"	85
	KMe60-4	8.71	0.96	56.0	9.5	2.9	5/8"	1 1/8"	112
	KMe80-4	12.10	1.89	50.0	8.4	2.6	5/8"	1 1/8"	129
	KMe95-4	14.84	1.78	76.0	12.5	3.9	5/8"	1 1/8"	139
	KMe115-4	18.40	2.83	75.0	12.2	3.8	7/8"	1 3/8"	170
	KMe140-4	22.31	2.68	113.0	18.4	5.6	7/8"	1 3/8"	195
	KMe175-4	27.95	3.45	134.0	21.6	6.6	7/8"	1 3/8"	217
6mm	KMe50-6	6.20	0.98	26.0	6.7	2.1	1/2"	1 1/8"	83
	KMe60-6	7.45	1.01	38.0	9.5	2.9	5/8"	1 1/8"	109
	KMe80-6	9.74	2.00	35.0	8.4	2.6	5/8"	1 1/8"	127
	KMe95-6	12.51	1.95	52.0	12.5	3.9	5/8"	1 1/8"	135
	KMe115-6	14.61	3.00	52.0	12.2	3.8	7/8"	1 3/8"	167
	KMe140-6	18.75	2.93	78.0	18.4	5.6	7/8"	1 3/8"	191
	KMe175-6	23.92	3.86	92.0	21.6	6.6	7/8"	1 3/8"	214
8mm	KMe50-8	5.70	1.02	20.0	6.7	2.1	1/2"	1 1/8"	84
	KMe60-8	6.81	1.03	30.0	9.5	2.9	5/8"	1 1/8"	110
	KMe80-8	8.58	2.05	27.0	8.4	2.6	5/8"	1 1/8"	127
	KMe95-8	11.47	2.04	40.0	12.5	3.9	5/8"	1 1/8"	136
	KMe115-8	13.0	3.07	40.0	12.2	3.8	7/8"	1 3/8"	167
	KMe140-8	17.4	3.06	60.0	18.4	5.6	7/8"	1 3/8"	190
	KMe175-8	22.0	4.06	71.0	21.6	6.6	7/8"	1 3/8"	212

Model	Fan and Motor specification												Electric defrost				
	No of fans	Diameter	Speed	Air throw std/ thrower ***		Noise level **	230V - 1ph-50Hz			400V - 3ph-50Hz			400V - 3ph				
							Total power †	F.L.C Amps per fan	SC Amps per fan	Total power †	F.L.C Amps per fan	SC Amps per fan	Standard			Heavy duty	
													Coil	Pan	Total	Coil	Total
		mm	rpm	4mm m	8mm m	dB(A)	W	A	A	W	A	A	W	W	W	W	W
KMe50	1	400	1410	17/26	19/29	60	200	1.05	3.3	200	0.65	2.6	1590	795	2385	2650	795
KMe60	1	400	1410	19/29	22/34	60	200	1.05	3.3	200	0.65	2.6	2400	1200	3600	4000	1200
KMe80	2	400	1410	19/29	22/34	63	400	1.05	3.3	400	0.65	2.6	3240	1590	4830	5400	1590
KMe95	2	400	1410	17/26	19/29	63	400	1.05	3.3	400	0.65	2.6	3240	1590	4830	5400	1590
KMe115	3	400	1410	19/29	22/34	65	600	1.05	3.3	600	0.65	2.6	4800	2400	7200	8000	2400
KMe140	3	400	1410	17/26	19/29	65	600	1.05	3.3	600	0.65	2.6	4800	2400	7200	8000	2400
KMe175	4	400	1410	17/26	19/29	66	800	1.05	3.3	800	0.65	2.6	5640	2820	8460	9400	2820

Notes:

Rating conditions: The duties shown in this brochure are at EN 328 Standard Condition 2 (-8°C saturated suction temperature, 0°C air entering). For data on refrigerants not shown, please contact your supplier.

* DT1 is the difference between the entering air temperature and the saturated suction temperature at the outlet of the cooler.

** Noise levels are based on free field conditions at a distance of 3m. Actual noise levels will depend upon cold store construction, store loading and the number of coolers installed.

*** Terminal air velocity 0.25m/s, free air conditions at 10°C. Air throw cannot be considered on absolute value because many factors have a substantial effect on the distance achieved.

† Total Power Input at Standard Condition 2 (-8°C saturated suction temperature, 0°C air entering).

KMe - dimension drawings

KMe50

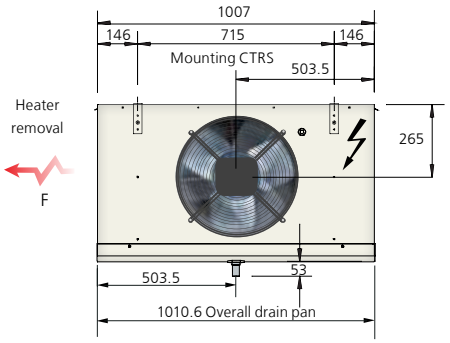

KMe 60

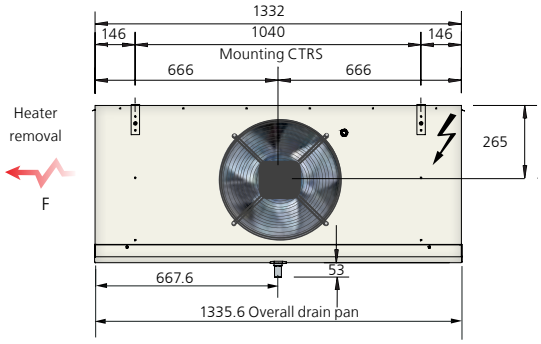

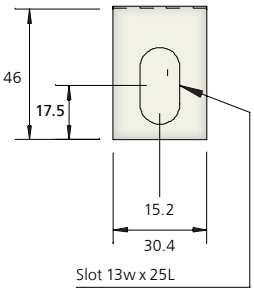

KMe80, KMe 95

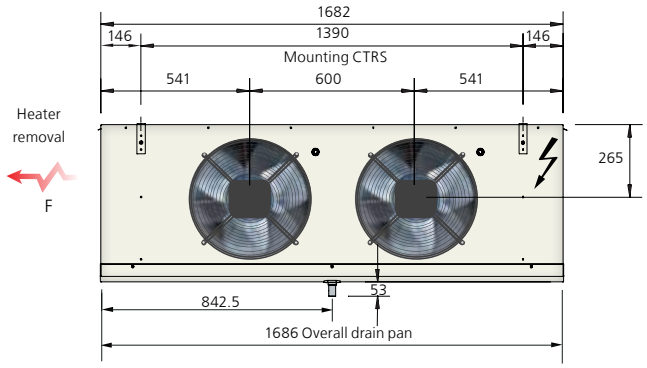

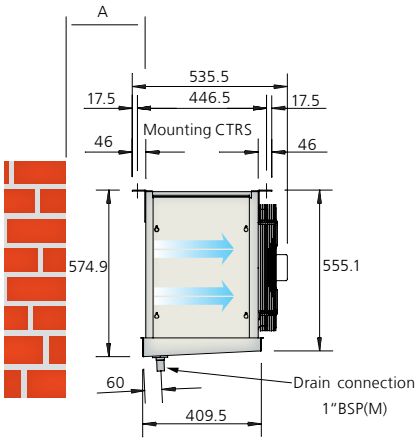

KMe 115, KMe 140

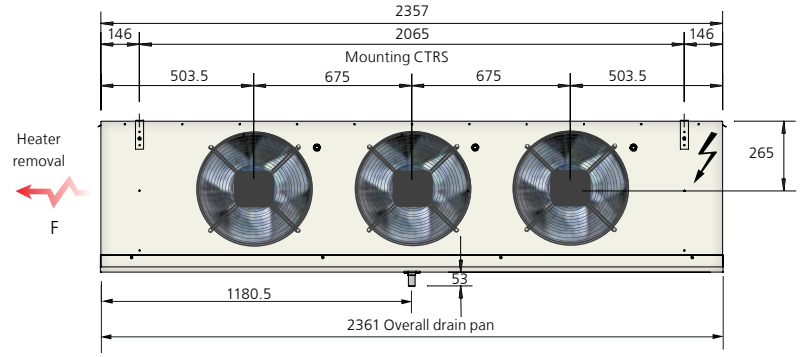

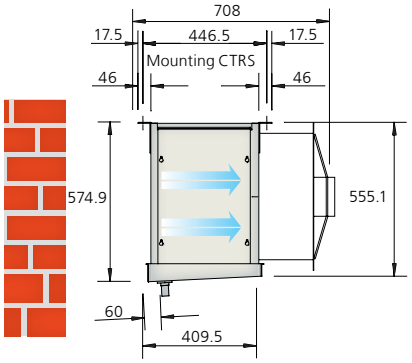

KMe 175

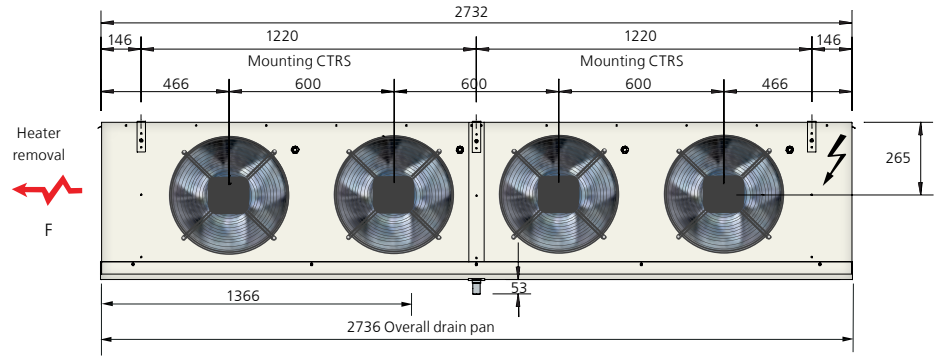

Models	A	F
KMe50	350	805
KMe60	350	1200
KMe80	400	1200
KMe95	450	1200
KMe115	500	1200
KMe140	500	1200
KMe175	500	1200

Note: All dimensions in mm,

F' = Min heat Withdrawal

DSR dual discharge cooler
Engineering at its best



The 11 DSR models have from one to four fans and are available in three fin spacings, providing capacities from 0.8kW to 15.1kW. Nine models have two speed motors and all can be fitted with optional speed control.

The DSR range of low profile, low air velocity, ceiling mounted, dual discharge coolers has been designed for cold rooms, laboratories, food preparation areas and similar applications. DSR coolers are available for low temperature or high temperature applications. The revolutionary design combines compactness with efficiency and attractiveness, as well as accessibility and serviceability. The casework is white epoxy painted galvanised steel. The coil is made from 1/2" O/D internally grooved copper tube with mechanical bonding to the proven GEA Searle 'D' fin available in 3mm, 4mm or 6mm spacing. For ease of installation, the wiring and drain connection can be from either end of the unit. The range calls on the experiences and designs of previous GEA Searle coolers and provides the opportunity for close temperature control, with minimum energy demands from a compact, unobtrusive unit.

Casework

All external metalwork is finished in a white high gloss epoxy powder. The coil is supported by the coil end plates and supports which are in turn connected to the hanger brackets. These enable the cooler to be mounted flush to the ceiling. Efficient condensate drainage is achieved inside the unit by sloping inner drain trays, enabling the cooler to be mounted square to the ceiling. The drain assembly is reversible for convenience of installation. The DSR design includes a space allocation at the refrigerant connection end to allow the TEV to be housed inside the unit.

Corrosion Protection

The rigid case structure is fabricated from galvanised sheet steel. Paint is applied to external surfaces in GEA Searle's modern electrostatic powder paint plant then baked and cured at 180°C, ensuring an even, flexible and durable finish.

Coils and Coil Options

The coil block comprises 1/2" diameter copper tubes with an extended inner surface ensuring maximum heat transfer efficiency and minimum refrigerant charge. The tubes are mechanically expanded to form a tight interference fit into the collars of the aluminium fins. This efficient design reduces the cooler's physical size thus maximising storage capacity. Standard coils are tested to 35.8 bar before they leave the factory. Cu/AL - Copper tubes with Aluminium fins, Cu/AV - Copper tubes with vinyl-coated, Aluminium fins (3mm and 4mm fin spacing), Coils circuited for glycol.

DSR - dual discharge cooler



1	2				
DSR	42	-	4	L	AL
			3	4	5

1. Range:	DSR
2. Model:	19, 22, 36, 42, 51, 62, 83, 100, 116
3. Fin spacing	3mm, 4mm, 6mm
4. Defrost:	Blank = No defrost, L = electric defrost
5. Fin material:	Al = Aluminium
- frequency:	Blank = 50Hz, 60 = 60Hz

Motors and fans

All DSR units utilise internally protected single phase squirrel cage motors of a totally enclosed, air cooled, permanent capacitor type in an IP44 enclosure. They are individually wired via plug and socket connectors and cable trays back to a robust junction box, where an electrical bridging facility is provided. High or low speed operation (excluding DSR 100 & 116) is obtained by connecting the electrical supply to the appropriate terminals. The motors on the DSR 100 & 116 are suitable for speed control via an optional GEA Searle Triac controller. Models DSR 19 to DSR 83 use a 305mm propeller type five-bladed fan with a fractional dual speed 25W motor. A pitch of 24° is supplied for 50Hz applications and 20° for 60Hz. Models DSR 100 and DSR 116 are fitted with four-bladed 305mm fans and 70W single speed motors, running at 4-pole speed. A pitch of 32° is supplied for 50Hz applications and 26° for 60Hz.

Speed control on DSR models 100 & 116 can be utilised to tailor air velocities to suit various applications - e.g to minimise possible personnel discomfort caused by airflow or noise. To achieve lower speeds on the single speed 70 Watt motors found on DSR100 and 116 models, GEA Searle offers a manually operated, Triac type speed controller which must be ordered separately. Performances for a typical speed of 800rpm are given in the Selection data. For other speeds, air flow and thermal performance are approximately proportional to speed. Operation at any speed between 600 rpm and maximum is approved.

Specification and Selection data

Noise Levels

The noise levels given in the tables are a guide to users where noise pollution is an important factor. The test figures are based on 'free field', defined as: 'unit mounted over a reflective plane with no other reflective surface'. Individual installations will have differing acoustic characteristics which will affect the noise levels. If noise is critical, advice should be sought from an acoustic consultant.

Defrost Options

Where electric defrost is specified, heater elements are installed beneath each coil block. Models DSR 100 and DSR 116 have an additional element within each coil. (A one metre space must be allowed at one end of these two models to facilitate element withdrawal). Hot gas defrost with electric drain pan heaters can also be specified. Low temperature operation is not recommended on the 3mm fin spacing option. Natural defrost with fans operating is not suitable or coolers operating with a room temperature of less than 5°C. For applications below -20°C it is recommended that the optional sump heater is used.

Installation

Units are designed to be flush-mounted to the ceiling, using the brackets incorporated into the casework. Electrical and refrigeration connections are at opposite ends but provision has been made for the electrical cabling to be ducted through a channel to the refrigeration end if required. Access is provided for service connections through the top of the unit at each end. The drain tray assembly can be reversed, allowing the drain connection to be sited at the preferred end. The standard drain connection is a 3/4" BSP horizontal connection, 35mm long and welded to the end of the sump.

Serviceability

Serviceability and accessibility were paramount in the design of the DSR range. Access to components such as fans, motors and defrost heaters is simple and rapid through either the fan guard or heater covers/drain trays. Removable end panels enable easy access to the electrical junction box and refrigeration connections. Motors can be removed rapidly, due to a simple plug and socket connector and straightforward mounting plate.

Quality Assurance

GEA Searle is a certified company to BS EN ISO 9001 which is the highest Quality Assurance qualification currently available, covering Performance Testing, Manufacturing Systems and Inspection Procedures.

Rating Conditions

The duties shown in this catalogue are at EN 328 Standard Condition 2 (-8°C saturated suction temperature, 0°C air entering).

Certification

The range is certified under the Eurovent CERTIFY-ALL direct expansion air coolers program, with performances tested in accordance with EN 328.

EUROVENT CERTIFIED PERFORMANCE
www.eurovent-certification.com

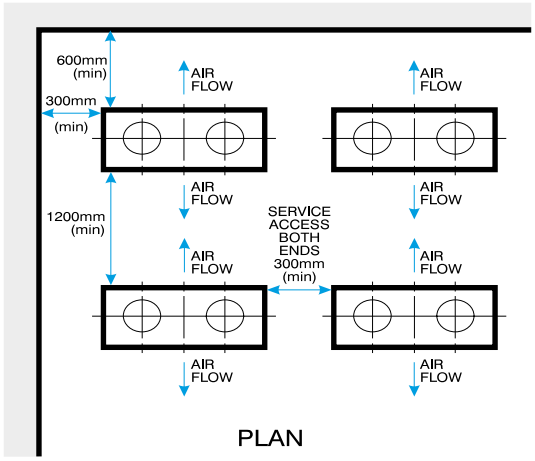

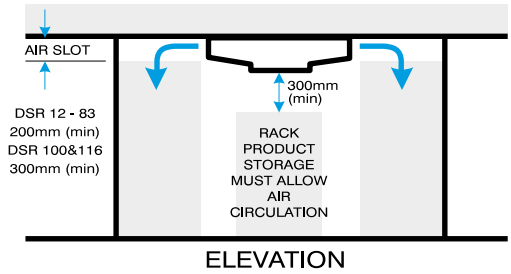

Location

The DSR is designed to draw air in the bottom and discharge it horizontally through the coils fitted on each side. For the best performance, the cooler should be placed at the geometric centre of the room or module in which it is op

Mounting

The DSR is primarily designed for flush ceiling mounting but may also be hung on rods. The cooler must be level in both horizontal directions to ensure free drainage of condensate.

Condensate Drainage

The horizontal drain connection is a 3/4" BSP(T) steel stub which is welded into the base of the drain sump. The drain line must pitch down with a minimum 2% gradient and must terminate outside the cold room with a 'U' trap seal.

TEV Selection

It is important that the TEV is sized correctly and that the valve is fitted directly onto the distributor inlet or as close to it as possible. The TEV should be sized for the maximum capacity at the minimum pressure drop across it, which occurs at the minimum condensing pressure. In addition, the following allowance must be made for the cooler's distributor and leads:

Distributor system pressure drop	
R404A, R507A, R407A	1.5 Bar
R134a	1.0 Bar

Externally equalised expansion valves should be used on all models.

Standard (high speed)

	Model	Capacity kW (SC2)	Motor details 230V - 1ph - 50Hz					Fan data		
		R404A	No. of fans	Total power input ***	FLC per fan	SC per fan	Speed	Air volume	Air throw	Noise level
				W	amps	amps	RPM	m^3/s	m	dB(A)
3mm	DSR19-3	2.42	1	64	0.3	0.38	1325	0.31	11	49
	DSR22-3	2.88	1	64	0.3	0.38	1325	0.30	10	49
	DSR36-3	4.60	2	128	0.3	0.38	1325	0.60	12	51
	DSR42-3	5.29	2	128	0.3	0.38	1325	0.58	11	51
	DSR51-3	6.90	3	192	0.3	0.38	1325	0.90	12	54
	DSR62-3	7.82	3	192	0.3	0.38	1325	0.86	11	54
	DSR68-3	9.20	4	256	0.3	0.38	1325	1.20	12	55
	DSR83-3	10.58	4	256	0.3	0.38	1325	1.15	11	55
	DSR100-3	13.0	4	640	0.81	1.85	1420	1.65	10	60
	DSR116-3	14.49	4	640	0.81	1.85	1420	1.47	9	60
4mm	DSR19-4	2.14	1	64	0.3	0.38	1325	0.31	11	49
	DSR22-4	2.67	1	64	0.3	0.38	1325	0.30	11	49
	DSR36-4	4.06	2	128	0.3	0.38	1325	0.61	12	51
	DSR42-4	4.95	2	128	0.3	0.38	1325	0.59	11	51
	DSR51-4	6.15	3	192	0.3	0.38	1325	0.92	12	54
	DSR62-4	7.40	3	192	0.3	0.38	1325	0.88	11	54
	DSR68-4	8.19	4	256	0.3	0.38	1325	1.22	12	55
	DSR83-4	9.90	4	256	0.3	0.38	1325	1.18	11	55
	DSR100-4	11.96	4	640	0.81	1.85	1325	1.72	11	60
	DSR116-4	13.70	4	640	0.81	1.85	1420	1.56	10	60
6mm	DSR19-6	1.78	1	64	0.3	0.38	1325	0.32	11	49
	DSR22-6	2.29	1	64	0.3	0.38	1325	0.31	10	49
	DSR36-6	3.33	2	128	0.3	0.38	1325	0.63	12	51
	DSR42-6	4.22	2	128	0.3	0.38	1325	0.61	11	51
	DSR51-6	4.95	3	192	0.3	0.38	1325	0.94	12	54
	DSR62-6	6.35	3	192	0.3	0.38	1325	0.92	11	54
	DSR68-6	6.68	4	256	0.3	0.38	1325	1.25	12	55
	DSR83-6	8.44	4	256	0.3	0.38	1325	1.22	11	55
	DSR100-6	10.05	4	640	0.81	1.85	1420	1.84	12	60
	DSR116-6	12.31	4	640	0.81	1.85	1420	1.72	11	60

Low (Low speed)

	DSR19-3	1.61	1	26	0.14	0.14	750	0.17	7	34
3mm	DSR22-3	1.84	1	26	0.3	0.14	750	0.16	7	34
	DSR36-3	2.99	2	52	0.14	0.14	750	0.33	8	37
	DSR42-3	3.34	2	52	0.14	0.14	750	0.31	7	37
	DSR51-3	4.49	3	78	0.14	0.14	750	0.49	8	39
	DSR62-3	4.83	3	78	0.14	0.14	750	0.47	7	39
	DSR68-3	5.98	4	104	0.14	0.14	750	0.66	8	40
	DSR83-3	6.56	4	104	0.14	0.14	750	0.62	7	40
	DSR100-3 ■	8.63	4	376	0.87	1.85	800	0.93	7	48
	DSR116-3 ■	9.43	4	376	0.87	1.85	800	0.86	7	48
4mm	DSR19-4	1.46	1	26	0.14	0.14	750	0.17	7	34
	DSR22-4	1.67	1	26	0.14	0.14	750	0.16	7	34
	DSR36-4	2.76	2	52	0.14	0.14	750	0.34	8	37
	DSR42-4	3.18	2	52	0.14	0.14	750	0.32	7	37
	DSR51-4	4.06	3	78	0.14	0.14	750	0.50	8	39
	DSR62-4	4.79	3	78	0.14	0.14	750	0.49	7	39
	DSR68-4	5.52	4	104	0.14	0.14	750	0.67	8	40
	DSR83-4	6.41	4	104	0.14	0.14	750	0.65	7	40
	DSR100-4 ■	8.23	4	376	0.87	1.85	800	0.98	7	48
	DSR116-4 ■	9.01	4	376	0.87	1.85	800	0.89	7	48
6mm	DSR19-6	1.25	1	26	0.14	0.14	750	0.17	7	34
	DSR22-6	1.51	1	26	0.14	0.14	750	0.17	7	34
	DSR36-6	2.29	2	52	0.14	0.14	750	0.34	8	37
	DSR42-6	2.86	2	52	0.14	0.14	750	0.34	8	37
	DSR51-6	3.44	3	78	0.14	0.14	750	0.52	8	39
	DSR62-6	4.22	3	78	0.14	0.14	750	0.50	8	39
	DSR68-6	4.64	4	104	0.14	0.14	750	0.69	8	40
	DSR83-6	5.64	4	104	0.14	0.14	750	0.67	8	40
	DSR100-6 ■	7.08	4	376	0.87	1.85	800	1.05	8	48
	DSR116-6 ■	8.44	4	376	0.87	1.85	800	0.98	7	48

■ Models 100 and 116 should only be operated at reduced speeds through the GEA Searle triac speed controller, which must be purchased separately. Duties shown are based on fan speeds of 800 rpm.

DSR - selection data

Model	Coil data							Defrost 230V (4/6mm only)
	Total surface area m²			Internal volume	Approx. ref charge	Connections		
	3mm	4mm	6mm	dm³	kg	Inlet	Outlet	kW
DSR19	18	14.0	9.40	2.50	0.78	1/2"	5/8"	1.58
DSR22	27	21.0	14.0	3.75	1.02	1/2"	5/8"	1.58
DSR36	33	25.0	17.0	4.22	1.36	1/2"	7/8"	2.85
DSR42	49	37.0	26.0	6.34	2.04	1/2"	7/8"	2.85
DSR51	49	37.0	26.0	6.14	1.97	1/2"	7/8"	4.27
DSR62	74	56.0	38.0	9.22	2.96	1/2"	1 1/8"	4.27
DSR68	66	50.0	34.0	8.07	2.59	1/2"	1 1/8"	5.70
DSR83	98	75.0	51.0	12.10	3.89	1/2"	1 1/8"	5.70
DSR100	98	75.0	51.0	12.10	3.89	5/8"	1 3/8"	7.67
DSR116	148	112.0	77.0	18.14	5.53	5/8"	1 3/8"	7.67

Refrigeration	R404A	R134a	R507A	R407A/F	R407C
Capacity factor (dew point, DT1)	1.00	0.91	0.97	1.18*	1.35*
Refrigerant charge density (kg/dm³)	0.312	0.338	0.313	0.332	0.332

* Dew point capacity factors for refrigeration with high glide apply only at the nominal rating condition. Mid point factors can be used for all conditions.
Refrigerant Charge Densities based on 25% of the internal volume being liquid.

Capacity

The duties presented in the specification tables are nominal capacities for operational (or "wet") conditions. They have been calculated from the tested 'dry' conditions, conducted in accordance with EN 328, using ratios as specified by Eurovent Standard 7/C/001 which are shown. Tests are conducted under dry conditions which allows performance to stabilise and permits measurements over a prolonged period. Please note that these ratios are already included in the performance data.

Standard condition	Air temp./ Evap. temp	Relative humidity	Ratio
SC1	10°C / °C	85%	1.35
SC2	0°C / -8°C	85%	1.15
SC3	-18°C / °C	95%	1.05
SC4	-25°C / -31°C	95%	1.00

DSR Cooler DT1 - WET

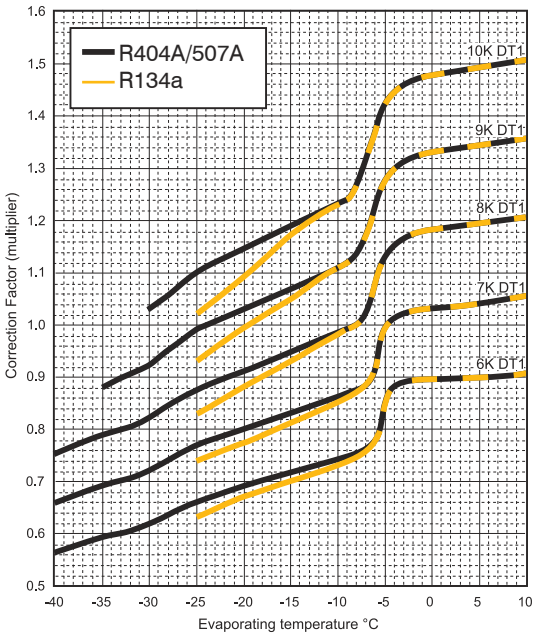

Correction Factors

(Multiply capacity by appropriate correction factor to give performance at chosen conditions).

Note: For R407, DT1 is calculated from mid point evaporating temperature

DSR - dimension drawings

End view

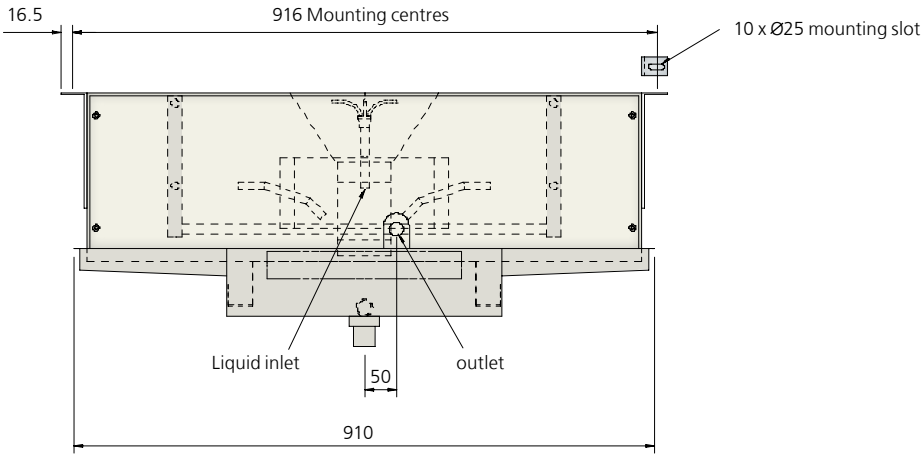

Side view

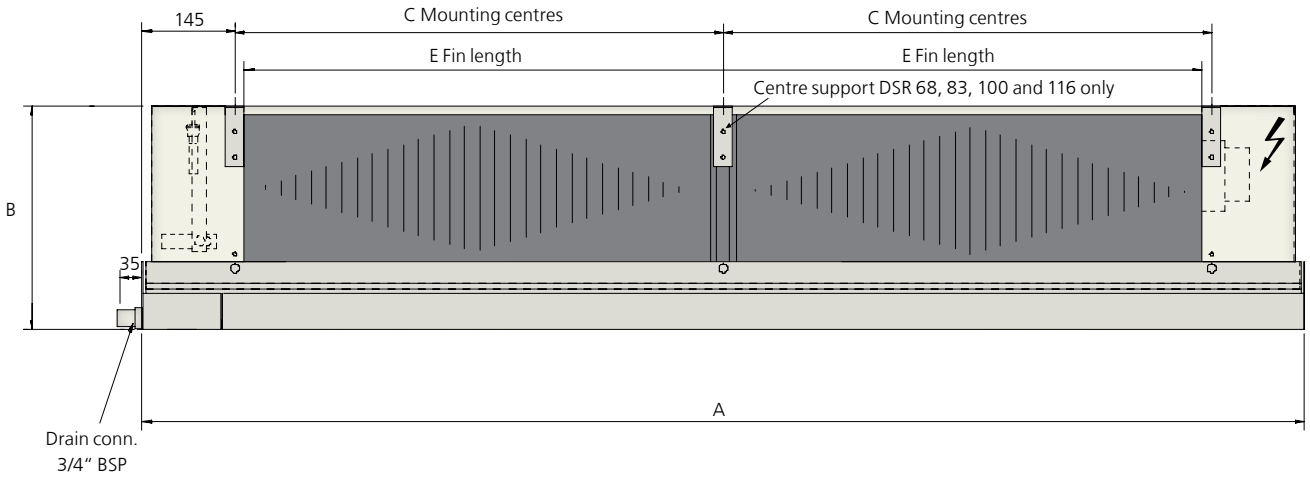

DSR - dimension table

Model	Length mm	Depth mm	Fixing centres mm	Fin length mm	Dry weight (kg)		
	A	B	C	E	3mm	4mm	6mm
DSR19	870	266	580	550	57	56	56
DSR22	870	266	580	550	61	59	58
DSR36	1320	266	1030	1000	81	79	78
DSR42	1320	266	1030	1000	88	85	83
DSR51	1820	266	1530	1500	107	104	102
DSR62	1820	266	1530	1500	118	113	111
DSR68	2320	266	1015 x 2	2000	136	132	130
DSR83	2320	266	1015 x 2	2000	150	144	141
DSR100	2320	351	1015 x 2	2000	161	155	152
DSR116	2320	351	1015 x 2	2000	181	172	167

LSR industrial Cooler

Engineering at its best



- Versatile range of dual discharge coolers.
- Ideally suited to production/preparation stores.
- Robust construction, designed to withstand demanding applications.
- Easy access via hinged drainpan's and fan plate(s) for maintenance and cleaning.
- Fin design provides high surface area for frost build-up. Minimal refrigerant charge.

The LSR range of dual discharge coolers has been developed to meet the demands of general cold storage along with those associated with food production and preparation halls. The range is divided into 3 main sections based upon fan speed. The cooler is fast and easy to install and operates a 4, 6 and 8 pole with two speed motors,.

Refrigerant and Coil

Capacity data is shown for R404A, with correction factors provided for other common refrigerants. For refrigerants and fluids not shown, including ammonia and water/glycol mixes, please consult your supplier. The 'D' fin when fitted with extended inner surface tubes delivers high performance with competitive pricing. Within the catalogue we offer 4 and 6mm fin pitch variants, for other fin spacing's please consult your supplier.

Fans / Motors and Noise levels

The 4 pole (nominal 1340 rpm) high speed, high velocity and higher noise level units are suitable for all temperatures although it should be noted that when operating above 0°C there is a high likelihood of moisture carry over. The 6 pole (nominal 930 rpm) mid speed, velocity and noise units are suitable for all temperatures and offer the best compromise between noise and performance. The 8 pole (nominal 680rpm) offers the lowest noise, lowest speed, air velocity and noise and is particularly suited to production/ preparation halls where operators work for prolonged periods. Noise levels are quoted at a distance of 3m from the unit at an angle of 45° to the horizontal within a free field condition. The figures are supplied as a guide only, showing comparative noise levels between models and fan selections. If the application was noise sensitive we would advise the appointment of an independent noise consultant.

LSRCooler DT1 - WET

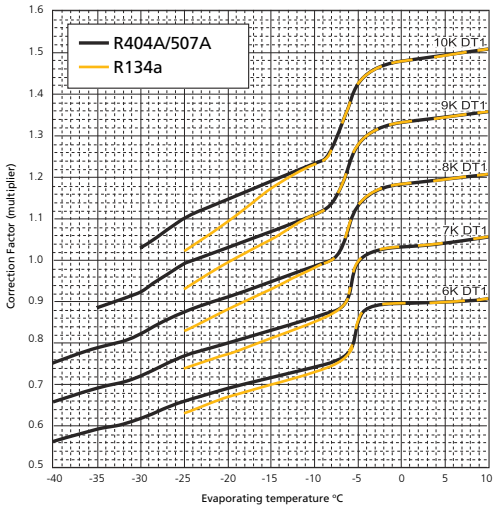

Note: For R407A & R407C, DT1 is calculated from mid point evaporating temperature

LSR - dual discharge cooler



1	2	3		4								
LSR	12	1	-	4	4D	-	4	-	EL	CU/AL		
					5		6		7	8		

1. Range:	LSR
2. Height of case:	12 tube high
3. No. of fans:	1, 2, 3, 4
4. Coil depth:	4, 6
5. Fan speed:	4D, 6D, 8D
6. Fin spacing:	4mm, 6mm
7. Defrost:	El = Electric defrost in coil and drain tray
8. Coil material:	Cu/Al = Copper, Aluminium fin, Cu/Av = Copper tube, vinyl coated Aluminium fin (4mm only), Bg = Blygold

LSR - air throws, pump circulation and defrost options

Air Throws and Pump Circulation - Air throws quoted within this catalogue are based on a terminal velocity of 0.25m/s in ideal conditions. Store layout, cooler location and discharge orientation can affect the air throw. Please refer to your supplier for further information. For Pump Circulation arranged as bottom feed for pump rates between 3:1 and 5:1. For other pump rates please refer to your supplier.

Defrost Options - Electric defrost coil and draintray Stainless steel heater elements with hermetically sealed terminals are pre-wired to a common junction box. Additional options available include double skinned and insulated drainpans, and isolator per fan.

Rating Conditions - The duties shown in this catalogue are at Eurovent Standard 7/C/001, Standard Condition 2 - (-8°C saturated suction temp. (dew point), 0°C air entering). Capacities are based on DT1 the difference between the entering air temperature and the saturated suction temperature at the outlet of the cooler.

4 pole high speed - (low temperature, evaporating below -10°c)

Fin spacing	Model	Capa-city R404A	Motor details 400V - 3ph - 50Hz					Fan data (500mm diameter)			Connections		Internal volume	Surface area	Defrost heater loads at 400V	
			No. of fans	Total power input	FLC per fan	SC per fan	Speed	Air volume	Air throw	Noise level @3m	Inlet (2 off)	Outlet (2 off)			Coil	Tray
		kW		W	Amps	Amps	RPM	m^3/s	m	dB(A)			dm^3	m^2	kW	kW
4mm	LSR121-44-4D	12.7	1	700	1.50	5.0	1390	1.93	12	61	5/8"	1 1/8"	9.3	50.5	3.2	1.6
	LSR121-64-4D	14.6	1	700	1.50	5.0	1390	1.78	10	61	5/8"	1 1/8"	14	75.5	3.2	1.6
	LSR122-44-4D	25.4	2	1400	1.50	5.0	1390	3.86	12	64	5/8"	1 1/8"	17.5	101	6.4	3.2
	LSR122-64-4D	29.7	2	1400	1.50	5.0	1390	3.55	10	64	5/8"	1 1/8"	26.3	151	6.4	3.2
	LSR123-44-4D	38.2	3	2100	1.50	5.0	1390	5.78	12	66	5/8"	1 1/8"	25.7	151	9.5	4.8
	LSR123-64-4D	44.5	3	2100	1.50	5.0	1390	5.33	10	66	5/8"	1 1/8"	38.6	227	9.5	4.8
	LSR124-44-4D	50.9	4	2800	1.50	5.0	1390	7.71	12	67	7/8"	1 1/8"	32.6	202	12.7	6.4
	LSR124-64-4D	59.3	4	2800	1.50	5.0	1390	7.10	10	67	7/8"	1 1/8"	48.8	303	12.7	6.4
6mm	LSR121-46-4D	10.9	1	700	1.50	5.0	1390	2.15	14	61	1/2"	1 1/8"	9.3	34.5	3.2	1.6
	LSR121-66-4D	13.4	1	700	1.50	5.0	1390	2.07	12	61	5/8"	1 1/8"	14	51.5	3.2	1.6
	LSR122-46-4D	21.5	2	1400	1.50	5.0	1390	4.29	14	64	1/2"	1 1/8"	17.5	69	6.4	3.2
	LSR122-66-4D	27.3	2	1400	1.50	5.0	1390	4.13	12	64	5/8"	1 1/8"	26.3	103	6.4	3.2
	LSR123-46-4D	32.2	3	2100	1.50	5.0	1390	6.43	14	66	5/8"	1 1/8"	25.7	103	9.5	4.8
	LSR123-66-4D	40.9	3	2100	1.50	5.0	1390	6.20	12	66	5/8"	1 1/8"	38.6	155	9.5	4.8
	LSR124-46-4D	42.9	4	2800	1.50	5.0	1390	8.57	14	67	7/8"	1 1/8"	32.6	138	12.7	6.4
	LSR124-66-4D	54.6	4	2800	1.50	5.0	1390	8.27	12	67	7/8"	1 1/8"	48.8	207	12.7	6.4

Note: 4 pole coolers can be used in high temperature applications, however due to the high air velocity water carry over may occur.

Energy rating is available from your local GEA Searle representative, or Selection software.

Energy efficiency class does not take into account the cooler defrost.

Refrigeration	R404A	R407A/F	R507A	R134a	R407C
Capacity factor (dew point, DT1)	1.00	1.18*	0.97	0.91	1.35*
Refrigerant charge density (kg/dm^3)	0.312	0.332	0.313	0.338	0.332

* Capacity factors for refrigerants with high glide apply only at the nominal rating condition. Refrigerant charge densities are based on 25% of the internal volume being liquid.

6 pole high speed - (High and low temperature)

Fin spacing	Model	Capa-city R404A	Motor details 400V - 3ph - 50Hz					Fan data (500mm diameter)			Connections		Internal volume	Surface area	Defrost heater loads at 400V	
			No. of fans	Total power input	FLC per fan	SC per fan	Speed	Air volume	Air throw	Noise level @3m	Inlet (2 off)	Outlet (2 off)			Coil	Tray
		kW		W	Amps	Amps	RPM	m^3/s	m	dB(A)			dm^3	m^2	kW	kW
4mm	LSR121-44-6D	9.5	1	250	0.75	1.65	930	1.29	9	53	5/8"	1 1/8"	9.3	50.5	3.2	1.6
	LSR121-64-6D	10.6	1	250	0.75	1.65	930	1.17	7	53	5/8"	1 1/8"	14	75.5	3.2	1.6
	LSR122-44-6D	19.1	2	500	0.75	1.65	930	2.59	9	56	5/8"	1 1/8"	17.5	101	6.4	3.2
	LSR122-64-6D	21.3	2	500	0.75	1.65	930	2.34	7	56	5/8"	1 1/8"	26.3	151	6.4	3.2
	LSR123-44-6D	28.6	3	750	0.75	1.65	930	3.88	9	58	5/8"	1 1/8"	25.7	151	9.5	4.8
	LSR123-64-6D	31.9	3	750	0.75	1.65	930	3.51	7	58	5/8"	1 1/8"	38.6	227	9.5	4.8
	LSR124-44-6D	38.1	4	1000	0.75	1.65	930	5.18	9	59	7/8"	1 1/8"	32.6	202	12.7	6.4
	LSR124-64-6D	42.7	4	1000	0.75	1.65	930	4.69	7	59	7/8"	1 1/8"	48.8	303	12.7	6.4
6mm	LSR121-46-6D	8.4	1	250	0.75	1.65	930	1.44	10	53	1/2"	1 1/8"	9.3	34.5	3.2	1.6
	LSR121-66-6D	10.2	1	250	0.75	1.65	930	1.39	9	53	5/8"	1 1/8"	14	51.5	3.2	1.6
	LSR122-46-6D	16.6	2	500	0.75	1.65	930	2.89	10	56	1/2"	1 1/8"	17.5	69	6.4	3.2
	LSR122-66-6D	20.7	2	500	0.75	1.65	930	2.79	9	56	5/8"	1 1/8"	26.3	103	6.4	3.2
	LSR123-46-6D	24.9	3	750	0.75	1.65	930	4.33	10	58	5/8"	1 1/8"	25.7	103	9.5	4.8
	LSR123-66-6D	31.1	3	750	0.75	1.65	930	4.18	9	58	5/8"	1 1/8"	38.6	155	9.5	4.8
	LSR124-46-6D	33.3	4	1000	0.75	1.65	930	5.77	10	59	7/8"	1 1/8"	32.6	138	12.7	6.4
	LSR124-66-6D	41.4	4	1000	0.75	1.65	930	5.57	9	59	7/8"	1 1/8"	48.8	207	12.7	6.4

Note: Energy rating is available from your local GEA Searle representative, or Selection software.

Energy efficiency class does not take into account the cooler defrost

Refrigeration	R404A	R407A/F	R507A	R134a	R407C
Capacity factor (dew point, DT1)	1.00	1.18*	0.97	0.91	1.35*
Refrigerant charge density (kg/dm^3)	0.312	0.332	0.313	0.338	0.332

* Capacity factors for refrigerants with high glide apply only at the nominal rating condition. Refrigerant charge densities are based on 25% of the internal volume being liquid.

8 pole high speed - (High and low temperature)

Fin spacing	Model	Capa-city R404A	Motor details 400V - 3ph - 50Hz					Fan data (500mm diameter)			Connections		Internal volume	Surface area	Defrost heater loads at 400V	
			No. of fans	Total power input	FLC per fan	SC per fan	Speed	Air volume	Air throw	Noise level @3m	Inlet (2 off)	Out-let (2 off)			Coil	Tray
		kW		W	Amps	Amps	RPM	m^3/s	m	dB(A)			dm^3	m^2	kW	kW
4mm	LSR121-44-8D	7.6	1	130	0.42	1.4	680	0.93	7	47	5/8"	1 1/8"	9.3	50.5	3.2	1.6
	LSR121-64-8D	8.2	1	130	0.42	1.4	680	0.84	6	47	5/8"	1 1/8"	14	75.5	3.2	1.6
	LSR122-44-8D	15.1	2	260	0.42	1.4	680	1.87	7	50	5/8"	1 1/8"	17.5	101	6.4	3.2
	LSR122-64-8D	16.4	2	260	0.42	1.4	680	1.68	6	50	5/8"	1 1/8"	26.3	151	6.4	3.2
	LSR123-44-8D	22.7	3	390	0.42	1.4	680	2.80	7	52	5/8"	1 1/8"	25.7	151	9.5	4.8
	LSR123-64-8D	24.7	3	390	0.42	1.4	680	2.53	6	52	5/8"	1 1/8"	38.6	227	9.5	4.8
	LSR124-44-8D	30.1	4	520	0.42	1.4	680	3.74	7	53	7/8"	1 1/8"	32.6	202	12.7	6.4
	LSR124-64-8D	32.9	4	520	0.42	1.4	680	3.37	6	53	7/8"	1 1/8"	48.8	303	12.7	6.4
6mm	LSR121-46-8D	6.5	1	130	0.42	1.4	680	1.07	7	47	1/2"	1 1/8"	9.3	34.5	3.2	1.6
	LSR121-66-8D	8	1	130	0.42	1.4	680	1.03	6	47	5/8"	1 1/8"	14	51.5	3.2	1.6
	LSR122-46-8D	13.1	2	260	0.42	1.4	680	2.14	7	50	1/2"	1 1/8"	17.5	69	6.4	3.2
	LSR122-66-8D	16.1	2	260	0.42	1.4	680	2.06	6	50	5/8"	1 1/8"	26.3	103	6.4	3.2
	LSR123-46-8D	19.7	3	390	0.42	1.4	680	3.21	7	52	5/8"	1 1/8"	25.7	103	9.5	4.8
	LSR123-66-8D	24.2	3	390	0.42	1.4	680	3.09	6	52	5/8"	1 1/8"	38.6	155	9.5	4.8
	LSR124-46-8D	26.3	4	520	0.42	1.4	680	4.28	7	53	7/8"	1 1/8"	32.6	138	12.7	6.4
	LSR124-66-8D	32.2	4	520	0.42	1.4	680	4.13	6	53	7/8"	1 1/8"	48.8	207	12.7	6.4

Note: Energy rating is available from your local GEA Searle representative, or Selection software.

Energy efficiency class does not take into account the cooler defrost

Refrigeration	R404A	R407A/F	R507A	R134a	R407C
Capacity factor (dew point, DT1)	1.00	1.18*	0.97	0.91	1.35*
Refrigerant charge density (kg/dm^3)	0.312	0.332	0.313	0.338	0.332

* Capacity factors for refrigerants with high glide apply only at the nominal rating condition. Refrigerant charge densities are based on 25% of the internal volume being liquid.

LSR 121

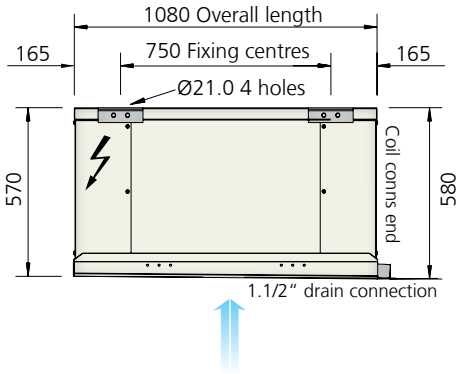

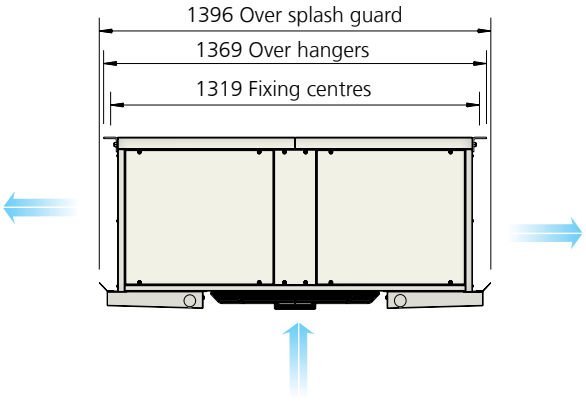

LSR 122

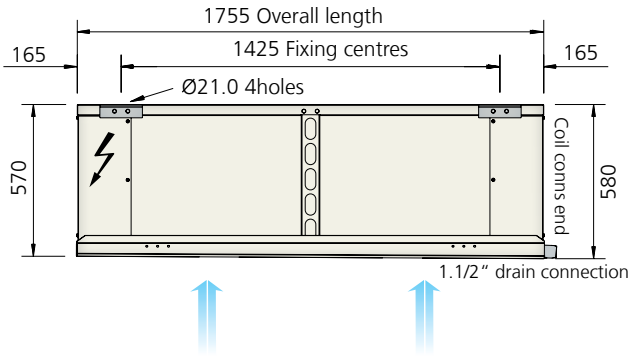

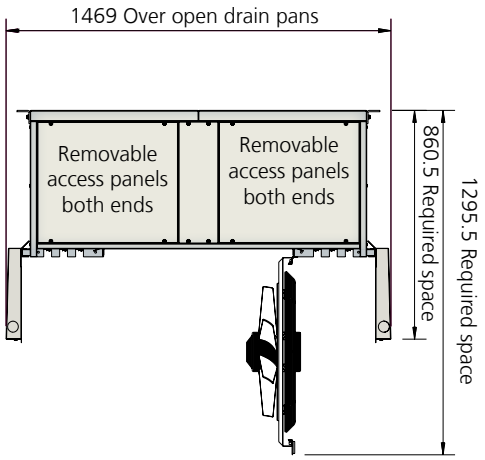

LSR 123

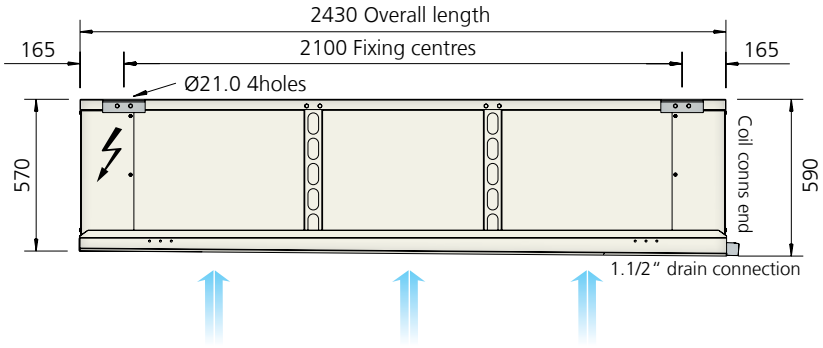

LSR 124

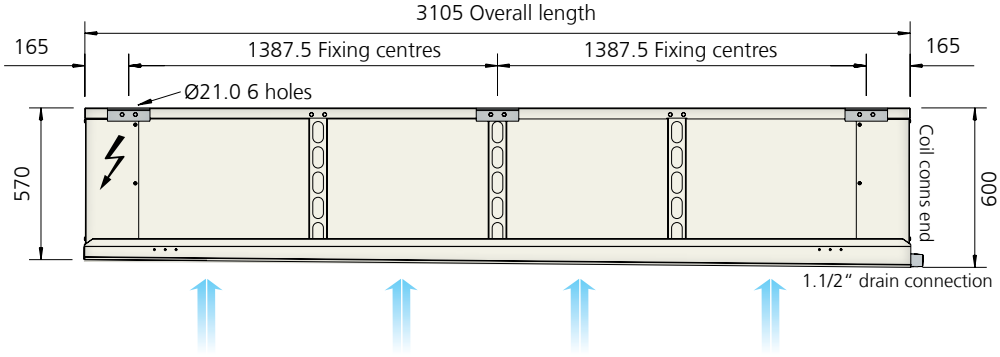

Model	Cu/Al weight (kg)	Cu/Cu weight (kg)
LSR121-44	117	151
LSR121-64	130	180
LSR122-44	180	232
LSR122-64	200	277
LSR123-44	237	314
LSR123-64	266	382
LSR124-44	301	405
LSR124-64	341	496
LSR121-46	114	141
LSR121-66	125	165
LSR122-46	175	216
LSR122-66	192	254
LSR123-46	230	291
LSR123-66	256	348
LSR124-46	292	374
LSR124-66	326	446

FM industrial Cooler

Engineering that lasts



- Versatile range of floor mounted coolers.
- Robust construction, designed to withstand demanding applications
- Capacities can be achieved with many choices of size, fin spacing and air volume.
- Easy access for maintenance and cleaning.
- Double-skinned, insulated draintray assists defrost in low temperature applications and prevents
- Condensation in high temperature applications.
- Structural, one-piece draintray allows units to be lifted, fully-assembled, from underneath.
- Fin design provides high secondary surface extending operating times between defrosts.
- Minimal refrigerant charge.

The FM range is versatile with a large number of configurations. This brochure layout allows quick and easy selection of the correct unit for each application. The range is divided into 4 heights; the FM20, FM24, FM30 and the FM36, with up to 4 fans and 3 coil depths. Data is shown for 4, 6 and 8mm fin spacing. The cooler can be orientated verticaly or horizontally.

Refrigerant and Coil

Capacity data is shown for R404A, with correction factors provided for other common refrigerants. For refrigerants and fluids not shown, including ammonia and water/glycol mixes, please consult your supplier. The 'S' fin featured in this cooler has been designed to offer a large secondary cooling surface which is beneficial for industrial refrigeration applications. Frost can build over a larger surface, reducing the number of defrost cycles, and allowing the cooler to operate efficiently for longer periods. This will lead to reduced ongoing energy costs. In addition, the relatively low internal coil volume results in reduced refrigerant charge.

Fans/Motors and Noise level

Ducted axial fans with 125Pa of external static pressure are standard, other pressure requirements can be designed on application. Standard fans are supplied with 4 pole, nominal 1440rpm fan speeds, for working areas with noise restrictions please consult our applications department. Noise levels are quoted at a distance of 3m from the unit at an angle of 45° to the horizontal within a free field condition. The figures are supplied as a guide only, showing comparative noise levels between models and fan selections. If the application is noise sensitive we would advise the appointment of an independent noise consultant.

Air Throws, Pump Circulation and Location

Air throws quoted within this catalogue are based on a terminal velocity of 0.25m/s in ideal conditions. Store layout, cooler location and discharge orientation can affect the air throw. Please refer to your supplier for further information. Arranged as bottom feed for pump rates between 3:1 and 5:1. For other pump rates please refer to your supplier. Location - Incorrect unit location will adversely affect unit performance and air throw. For advice on unit location, please contact your supplier.

Defrost

- Electric defrost coil and draintray Stainless steel heater elements with hermetically sealed terminals are pre-wired to a common junction box.
- Hot gas coil, electric draintray (HGEA, HGEB, HGEC, HGED) Incorporating four circuiting options all with electric heater rods within the draintray.
- Hot gas coil and draintray (HGDA, HGDB, HGDC, HGDD) Generally as above but units are supplied with a hot gas tube matrix within the draintray.
- Peripheral Heaters Recommended for use on all ducted axial fan options when operating below freezing, with horizontal discharge.

FM - industrial cooler



1	2	3		4	5							
FM	20	1	-	6	6	-	A	-	AV	EL	CU/AL	
							6		7	8	9	

1. Range: FM
2. Height of case: Tube high = 20, 24, 30, 36
3. No. of fans: 1, 2, 3, 4
4. No of rows: 4, 6, 8
5. Fin spacing: 4mm, 6mm, 8mm
6. Fan/motor type: Ducted Axial AA, AB, AC, AD
7. Orientation: V = Vertical, H = Horizontal
8. Defrost:
   El = Electric defrost in coil and drain tray,
   HGEA,B,C,D = hot gas coil, electric drain tray defrost,
   HGDA,B = hot gas coil and drain tray defrost,
   HGDC = hot gas coil and drain tray defrost,
   HGDD = hot gas coil and drain tray defrost,
9. Coil material: Cu/Al = Copper, Aluminium fin,

FM - options

A full range of turning cowls (for vertical discharge units no external static pressure) and air operated dampers are available. Other options may be available please consult our applications department for further details.

Defrost loads include drain pan power -Peripheral heater load (where fitted) for ducted axial fan sets 800mm diameter = 630W, 900mm diameter = 710W per fan.

Modules	FM--1	FM--2	FM--3	FM--4
Drainpan	1.6	3.2	4.8	6.4

4mm specification

Model	Capacity	Air volume at 125Pa	Surface area	Section	Inlet	Outlet	Internal volume	Defrost power	Sound power level	Sound pressure level	Air throw
	kW	m^3/s	m^2		Inches	Inches	dm^3	kW	dB(A)	dB(A)	m
FM201-44-AA	26.4	4.54	137.5	1	5/8"	1 3/8"	26	10	94	77	51
FM201-64-AA	32.1	4.19	206.3	1	5/8"	1 3/8"	38	12	94	77	47
FM202-44-AA	52.1	9.07	275.0	1	3/4"	1 3/8"	49	19	97	80	51
FM202-64-AA	64.5	8.39	412.5	1	3/4"	1 5/8"	72	24	97	80	47
FM203-44-AA	80.1	13.59	412.5	1	3/4"	2 1/8"	71	29	99	82	51
FM203-64-AA	96.7	12.56	618.8	2	2 x 3/4"	2 x1 5 /8"	106	36	99	82	47
FM241-44-AB	29.2	4.75	165.0	1	5/8"	1 3/8"	31	10	94	77	54
FM241-64-AB	35.4	4.45	247.5	1	3/4"	1 3/8"	46	12	94	77	51
FM242-44-AB	57.9	9.50	330.0	1	3/4"	1 5/8"	59	19	97	80	54
FM242-64-AB	71.0	8.90	495.1	1	3/4"	1 5/8"	87	24	97	80	51
FM243-44-AB	88.3	14.25	495.1	1	3/4"	2 1/8"	85	29	99	82	54
FM243-64-AB	106.6	13.35	742.6	2	2 x 3/4"	2 x 1 5/8"	128	36	99	82	51
FM302-44-AC	73.9	12.06	412.5	2	2 x 5/8"	2 x 1 3/8"	74	19	101	84	55
FM302-64-AC	91.7	11.65	618.8	2	2 x 3/4"	2 x 1 3/8"	109	29	101	84	50
FM303-44-AC	111.0	18.0	618.8	2	2 x 3/4"	2 x 1 5/8"	107	29	103	86	55
FM303-64-AC	137.8	17.47	928.2	2	2 x 3/4"	2 x 1 5/8"	158	43	103	86	50
FM304-44-AC	146.5	24.0	825.1	2	2 x 3/4"	2 x 1 5/8"	140	38	104	87	55
FM304-64-AC	183.1	23.29	1237.6	2	2 x 3/4"	2 x 2 1/8"	208	58	104	87	50
FM362-64-AD	117.6	15.39	742.6	2	2 x 3/4"	2 x 1 5/8"	130	34	103	86	52
FM363-84-AD	132.0	15.02	990.1	2	2 x 3/4"	2 x 1 5/8"	172	45	103	86	49
FM363-64-AD	176.6	23.08	1113.9	3	3 x 3/4"	3 x 1 5/8"	191	50	105	88	52
FM363-84-AD	196.6	22.53	1485.2	2	2 x 3/4"	2 x 2 1/8"	254	67	105	88	49
FM364-64-AD	233.8	30.77	1485.2	3	3 x 3/4"	3 x 2 1/8"	252	67	106	89	52
FM364-84-AD	265.0	30.05	1980.2	3	3 x 3/4"	3 x 2 1/8"	336	90	106	89	49

6mm specification

Model	Capacity	Air volume at 125Pa	Surface area	Section	Inlet	Outlet	Internal volume	Defrost power	Sound power level	Sound pressure level	Air throw
	kW	m^3/s	m^2		Inches	Inches	dm^3	kW	dB(A)	dB(A)	m
FM201-66-AA	26.4	4.45	140.0	1	5/8"	1 3/8"	38	10	94	77	50
FM201-86-AA	29.9	4.28	186.8	1	5/8"	1 3/8"	50	12	94	77	48
FM202-66-AA	52.9	8.89	280.0	1	3/4"	1 3/8"	72	19	97	80	50
FM202-86-AA	61.2	8.55	373.7	1	3/4"	1 5/8"	95	24	97	80	48
FM203-66-AA	79.4	13.34	420.1	2	2 x 3/4"	2 x 1 3/8"	106	29	99	82	50
FM203-86-AA	91.5	12.83	560.5	1	3/4"	1 3 /8"	141	36	99	82	48
FM241-66-AB	29.1	4.7	168.0	1	5/8"	1 3/8"	46	10	94	77	54
FM241-86-AB	33.4	4.5	224.2	1	3/4"	1 3/8"	61	12	94	77	51
FM242-66-AB	58.5	9.4	336.1	1	3/4"	1 5/8"	87	19	97	80	54
FM242-86-AB	67.2	9.0	448.4	1	3/4"	1 5/8"	115	24	97	80	51
FM243-66-AB	88.8	14.1	504.1	2	2 x 3/4"	2 x 1 3/8"	128	29	99	82	54
FM243-86-AB	100.8	13.5	672.6	2	2 x 3/4"	2 x 1 5/8"	171	36	99	82	51
FM302-66-AC	74.2	12.0	420.4	2	2 x 3/4"	2 x 1 3/8"	109	19	101	84	54
FM302-86-AC	86.1	11.65	560.5	2	2 x 3/4"	2 x 1 3/8"	144	29	101	84	52
FM303-66-AC	111.6	18.0	630.6	2	2 x 3/4"	2 x 1 5/8"	158	29	103	86	54
FM303-86-AC	129.1	17.47	840.8	2	2 x 3/4"	2 x 1 5/8"	209	43	103	86	52
FM304-66-AC	149.6	24.0	840.8	2	2 x 3/4"	2 x 1 5/8"	208	38	104	87	54
FM304-86-AC	172.6	23.29	1121.1	3	3 x 3/4"	3 x 2 5/8"	276	58	104	87	52
FM362-66-AD	94.3	15.78	504.5	2	2 x 3/4"	2 x 1 5/8"	130	34	103	86	56
FM362-86-AD	110.8	15.3	672.6	2	2 x 3/4"	2 x 1 5/8"	172	45	103	86	54
FM363-66-AD	141.6	23.67	756.7	2	2 x 3/4"	2 x 1 5/8"	191	50	105	88	56
FM363-86-AD	165.8	23.29	1009.0	2	2 x 3/4"	2 x 2 1/8"	254	67	105	88	54
FM364-66-AD	190.1	31.57	1009.0	3	3 x 3/4"	3 x1 5/8"	252	67	106	89	56
FM364-86-AD	222	31.03	1345.3	3	3 x 3/4"	3 x 1 5/8"	336	90	106	89	54

8mm specification

Model	Capacity	Air volume at 125Pa	Surface area	Section	Inlet	Outlet	Internal volume	Defrost power	Sound power level	Sound pressure level	Air throw
	kW	m^3/s	m^2		Inches	Inches	dm^3	kW	dB(A)	dB(A)	m
FM201-68-AA	22.1	4.63	107.1	1	5/8"	1 1/8"	38	12	94	77	52
FM201-88-AA	25.9	4.45	142.8	1	5/8"	1 3/8"	50	14	94	77	50
FM202-68-AA	44.6	9.23	214.1	1	3/4"	1 3/8"	72	24	97	80	52
FM202-88-AA	52.3	8.89	285.5	1	3/4"	1 5/8"	95	29	97	80	50
FM203-68-AA	66.3	13.86	321.2	2	2 x 3/4"	2 x1 5 /8"	106	36	99	82	52
FM203-88-AA	75.5	13.34	428.3	1	3/4"	2 1 /8"	141	43	99	82	50
FM241-68-AB	24.4	4.80	128.5	1	5/8"	1 1/8"	46	12	94	77	55
FM241-88-AB	25.7	4.67	171.3	1	5/8"	1 3/8"	61	14	94	77	53
FM242-68-AB	48.5	9.60	257.0	1	3/4"	1 5/8"	87	24	97	80	55
FM242-88-AB	57.7	9.34	342.6	1	3/4"	1 5/8"	115	29	97	80	53
FM243-68-AB	72.8	14.40	385.4	1	2 x 3/4"	2 x 1 3/8"	128	36	99	82	55
FM243-88-AB	86.6	14.01	513.9	2	2 x 3/4"	2 x 1 3/8"	171	43	99	82	53
FM302-68-AC	61.6	12.21	321.2	2	2 x 5/8"	2 x 1 3/8"	109	29	101	84	56
FM302-88-AC	73.2	12.00	428.3	2	2 x 3/4"	2 x 1 3/8"	144	38	101	84	54
FM303-68-AC	93	18.32	481.8	2	2 x 3/4"	2 x 1 3/8"	158	43	103	86	56
FM303-88-AC	110.3	18.00	642.4	2	2 x 3/4"	2 x 1 5/8"	209	58	103	86	54
FM304-68-AC	124.1	24.42	642.4	2	2 x 3/4"	2 x 1 5/8"	208	58	104	87	56
FM304-88-AC	145	24.00	856.6	2	2 x 3/4"	2 x1 5/8"	276	77	104	87	54
FM362-68-AD	77.5	15.95	385.4	2	2 x 3/4"	2 x 1 3/8"	130	34	103	86	58
FM362-88-AD	93.2	15.77	513.9	2	2 x 3/4"	2 x 1 5/8"	172	45	103	86	56
FM363-68-AD	117.5	23.92	578.2	2	2 x 3/4"	2 x 1 5/8"	191	50	105	88	58
FM363-88-AD	140.1	23.65	770.9	2	2 x 3/4"	2 x 2 5/8"	254	67	105	88	56
FM364-68-AD	157	31.89	770.9	3	3 x 3/4"	3 x 1 5/8"	252	67	106	89	58
FM364-88-AD	186.8	31.53	1027.9	3	3 x 3/4"	3 x 1 5/8"	336	90	106	89	56

FM Cooler DT1 - WET

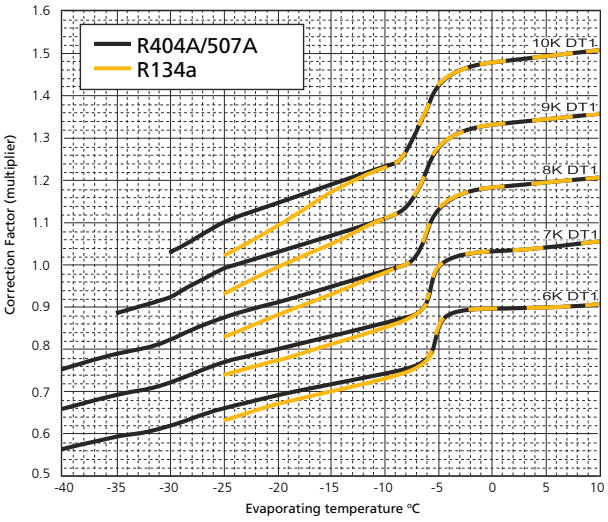

Note: For R407, DT1 is calculated from mid point evaporating temperature

Correction factors

Refrigeration	R404A	R134a	R507A	R407A/F	R407C
Capacity factor (dew point, DT1)	1.00	0.91	0.97	1.18*	1.35*
Refrigerant charge density (kg/dm^3)	0.312	0.338	0.313	0.332	0.332

* Capacity factors for refrigerants with high glide apply only at the nominal rating condition. Refrigerant charges densities are based on 25% of the nternal volume being liquid.

Fanset	Diameter	Pole	FLC/SC	Power input kW	Fan Pitch
AA	800mm	4 pole	5.8/30A	3.3	14°
AB	800mm	4 pole	5.8/30A	3.3	24°
AC	900mm	4 pole	5.8/30A	3.3	20°
AD	900mm	4 pole	9.4/55A	5.3	18°

General

Note: All data for 400V, 3 phase, 50Hz supply. Noise levels are quoted at a distance of 3m from the units (free field).Capacities are nominal, based on DT1 dew point and stated at Eurovent standard condition 2 (-8°C saturated suction temp, 0°C air entering).

FM dimensions - Vertical

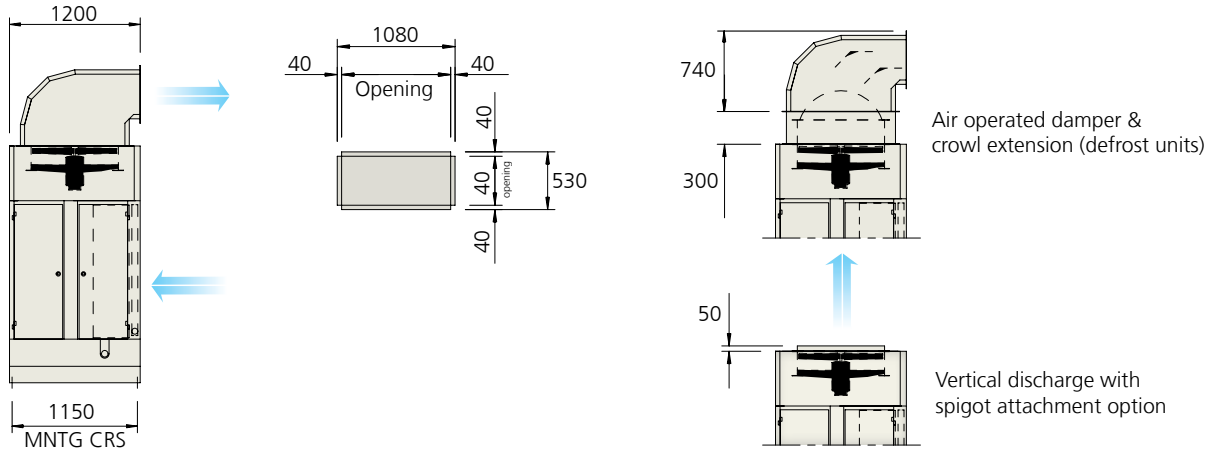

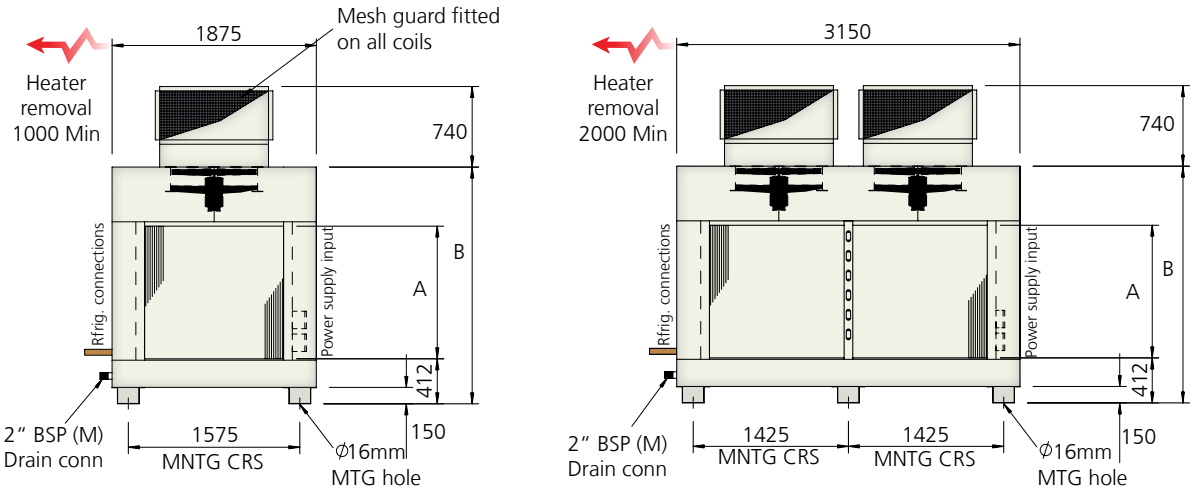

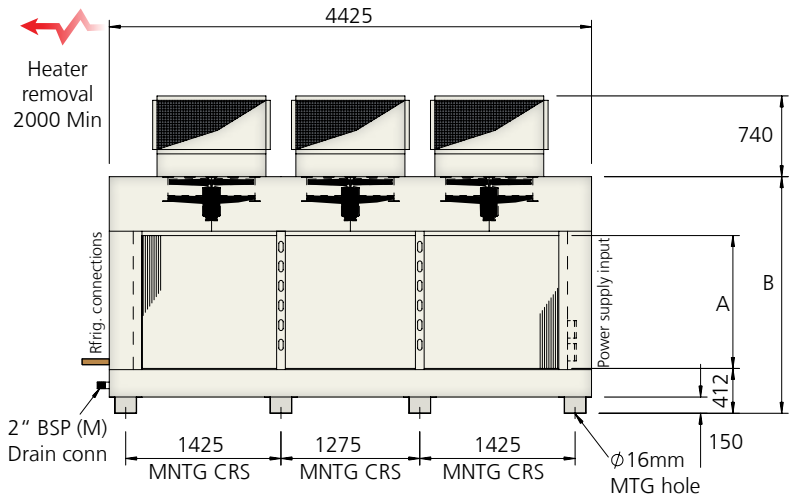

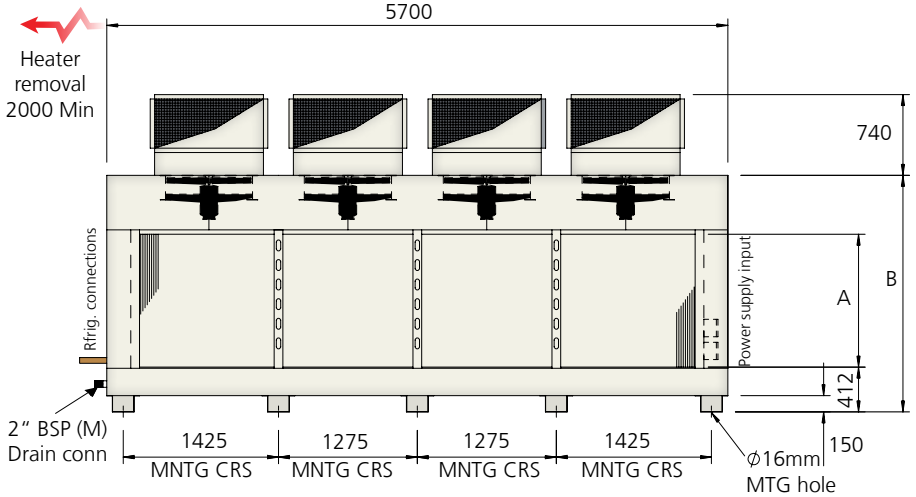

Model	Dim A	Dim B
FM20	1016	1969
FM24	1219	2173
FM30	1524	2477
FM36	1829	2782

FM dimensions - Horizontal

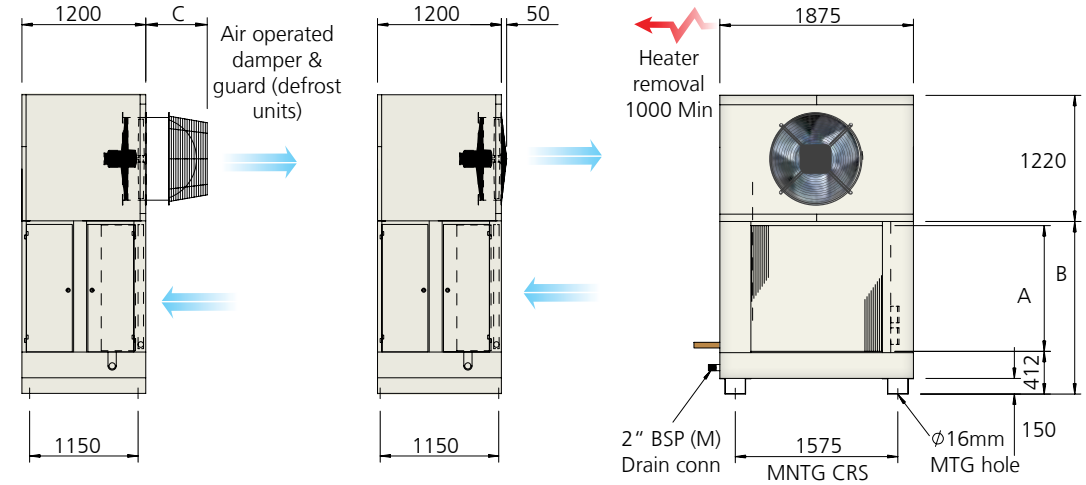

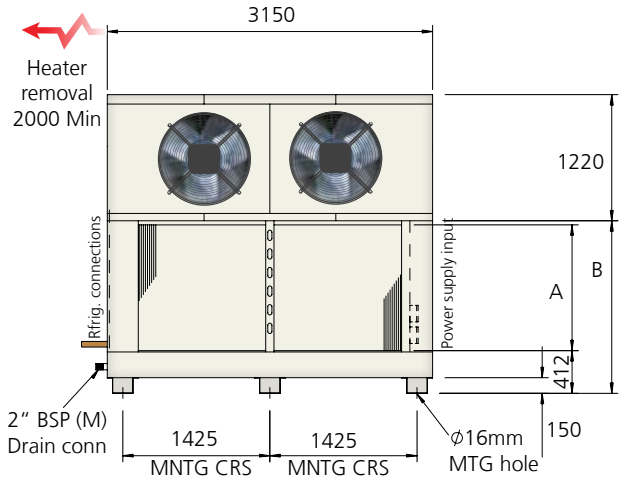

Model	Dim A	Dim B	Dim C
FM20	1016	1468	595
FM24	1219	1671	595
FM30	1524	1976	573
FM36	1829	2281	573

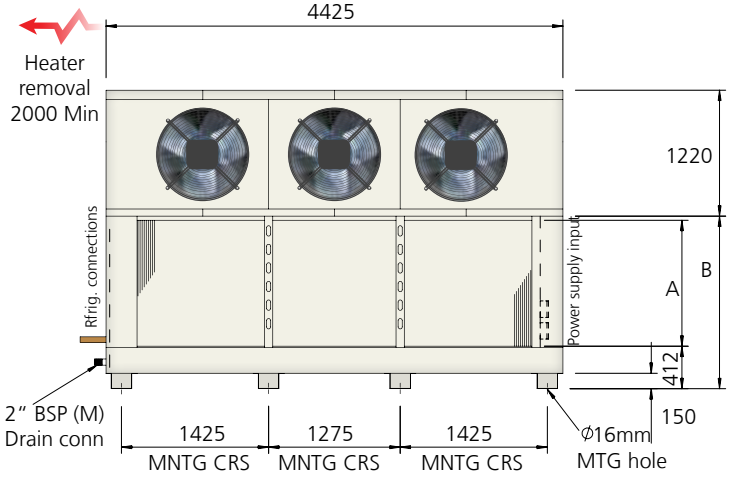

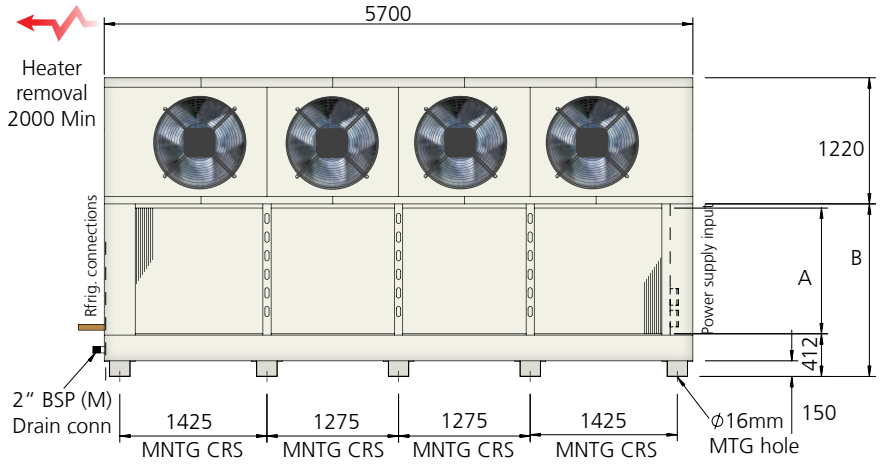

Model		201-4x	201-6x	201-8x	241-4x	241-6x	241-8x	301-4x	301-6x	301-8x	361-4x	361-6x	361-8x	202-4x	202-6x	202-8x	242-4x	242-6x	242-8x	302-4x	302-6x	302-8x	362-4x	362-6x	362-8x
(kg)	Cu/Al	502	565	627	550	625	700	633	726	820	704	816	929	788	911	1035	864	1013	1161	1001	1187	1372	1116	1338	1561
Weight	Cu/Cu	451	488	525	489	533	578	556	612	667	612	679	745	686	759	832	742	830	917	849	958	1067	933	1064	1195

Model		203-4x	203-6x	203-8x	243-4x	243-6x	243-8x	303-4x	303-6x	303-8x	363-4x	363-6x	363-8x	204-4x	204-6x	204-8x	244-4x	244-6x	244-8x	304-4x	304-6x	304-8x	364-4x	364-6x	364-8x
(kg)	Cu/Al	1073	1258	1443	1179	1401	1622	1370	1647	1924	1528	1861	2193	1359	1605	1851	1493	1789	2084	1739	2108	2477	1940	2383	2826
Weight	Cu/Cu	921	1029	1138	996	1126	1256	1141	1304	1467	1253	1449	1644	1156	1300	1444	1249	1422	1595	1433	1650	1866	1574	1833	2093

SM industrial Cooler
Engineering that lasts



- Versatile range of floor mounted coolers.
- Robust construction, designed to withstand demanding applications.
- Capacities can be achieved with many choices of size, fin spacing and air volume.
- Can be flush-mounted to ceiling.
- Easy access for maintenance and cleaning. Structural, one-piece draintray allows units to be lifted, fully-assembled, from underneath.
- Fin design provides high surface area for frost build-up. Minimal refrigerant charge.
- Double-skinned, insulated draintray assists defrost in low temperature applications and prevents condensation in high temperature applications.

The SM range has been designed to be as versatile as possible, whilst allowing unit selections to be easily made. The following specification pages have been laid out to ease the selection process. Unit sizes and coils have been matched with different fan/ motor combinations to broadly meet two common operating conditions.

1. High temperature applications such as store rooms and occupied areas. These units, with either propeller or ducted axial fans, feature low face velocities, low noise and high efficiency. These fans have also been selected to ensure that there is no water carry-over.

2. Low temperature applications such as cold storage or blast freezing in generally unoccupied areas. These units, with ducted axial fans, feature high face velocities and high air throws where low noise levels are not required. These units offer greater duty for a given size than high temperature units.

The choice of particular units is not restricted to these operating conditions, but greater care will need to be taken in the application of units outside the given conditions. For example, water carry-over could occur when operating 'low temperature' units in certain high temperature applications. The range is divided into 4 heights; the SM16, SM20, SM24 and the SM30, with up to 4 fans - either propeller or ducted axial - and 3 coil depths. Data is shown for 4, 6 and 8mm fin spacing.

Refrigerant

Capacity data is shown for R404A, with correction factors provided for other common refrigerants. For refrigerants and fluids not shown, including ammonia and water/glycol mixes, please consult your supplier. This will lead to reduced on going energy costs. In addition, the relatively low internal coil volume results in reduced refrigerant charge.

Fan/Motors and Pump circulation

Propeller or ducted axial fans with varying face velocities and air throws are offered to provide optimum performance in the two broad operating conditions outlined in 'General' above. Pump circulation arranged as bottom feed for pump rates between 3:1 and 5:1. For other pump rates please refer to your supplier.

Location and Air throw

Incorrect unit location will adversely affect unit performance and air flow. Units should be adequately spaced from walls to ensure even air coverage over the coil block. For advice on unit location, please contact your supplier. Air throws quoted within this catalogue are base on a terminal velocity of 0.25m/s in ideal conditions. Store layout, cooler location and type of fan can affect the air throw. Please refer to your supplier for further information.

SM - industrial cooler

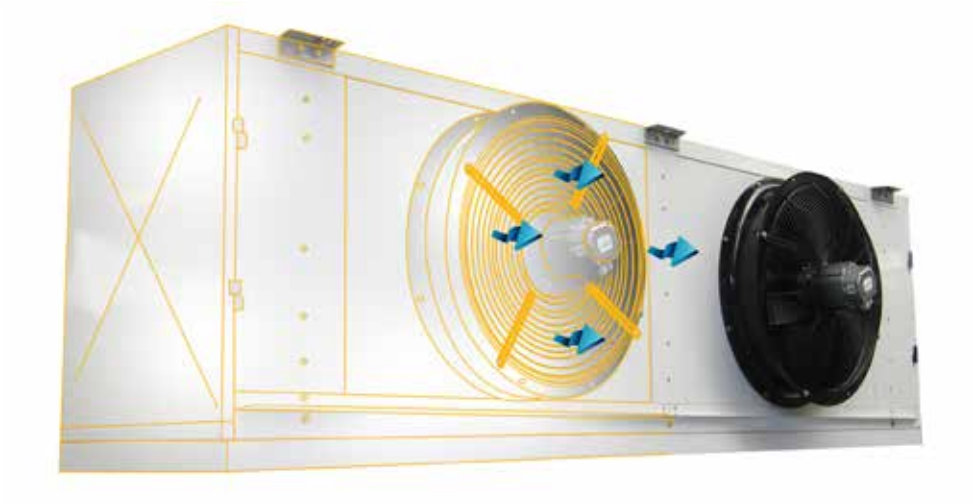

1	2	3		4	5					
SM	16	1	-	4	4	-	A3	EL	CU/AL	
							6	7	8	

1. Range: SM
2. Height of case: Tube high = 16, 20, 24, 30
3. No. of fans: 1, 2, 3, 4
4. No of rows: 4, 6, 8
5. Fin spacing: 4mm, 6mm, 8mm
6. Fan/motor type: Ducted Axial A1, A2, A3, A4, A5, A6, Propeller = P1
7. Orientation: V = Vertical, H = Horizontal
8. Defrost:
   El = Electric defrost in coil and drain tray,
   HGEA,B,C,D = hot gas coil, electric drain tray defrost,
   HGDA,B = hot gas coil and drain tray defrost,
   HGDC = hot gas coil and drain tray defrost,
   HGDD = hot gas coil and drain tray defrost,
9. Coil material: Cu/Al = Copper, Aluminium fin, Bg = Blygold

Noise Levels and Defrost

Noise levels are quoted at a distance of 3m from the unit at an angle of 45° to the horizontal within a free field condition. The figures are supplied as a guide only, showing comparative noise levels between models and fan selections. If the application is noise sensitive we would advise the appointment of an independent noise consultant.

- Electric defrost coil and draintray Stainless steel heater elements with hermetically sealed terminals are pre-wired to a common junction box.
- Hot gas coil, electric draintray (HGEA, HGEB, HGEC, HGED) Incorporating four circuiting options all with electric heater rods within the draintray.
- Hot gas coil and draintray (HGDA, HGDB, HGDC, HGDD) Generally as above but units are supplied with a hot gas tube matrix within the draintray. Fan Plate Heaters. For high latent load applications, fan plate heaters are available as an option on propeller fan units.

4mm specification High/low temperature - Low face velocity, low capacity, low air throw, compact unit

Model	Air entering -25 °C to + 20 °C Propeller					Air entering -25 °C to + 20 °C Ducted Axial					Connections		Surface area	Internal volume	Defrost power
	Fan / Motor	R404A capacity	Air volume	Air throw	Noise	Fan / Motor	R404A capacity	Air volume	Air throw	Noise	Outlet	Inlet			
		kW	m³/s	m	dB(A)		kW	m³/s	m	dB(A)			m²	dm³	kW
SM161-44	P1 Dia. = 630mm 6 pole FLC/SC = 1.8/5.4A input = 810W	18.1	2.56	18	59	A1 Dia. = 630mm 6 pole FLC/SC = 1.5/4.5A input = 710W	18.9	2.72	35	58	1 3/8"	1/2"	110	20	7
SM161-64		21.1	2.40	17	59		22.2	2.56	33	58	1 3/8"	5/8"	165	30	10
SM162-44		35.7	5.10	18	62		37.0	5.44	35	61	1 5/8"	5/8"	220	38	14
SM162-64		43.0	4.82	17	62		44.9	5.12	33	61	1 5/8"	5/8"	330	58	19
SM163-44		54.1	7.66	18	64		56.4	8.18	35	63	2 1/8"	1 1/8"	330	57	22
SM163-64		63.8	7.22	17	64		67.1	7.68	33	63	2 1/8"	1 1/8"	495	84	29
SM201-44	P1 Dia. = 630mm 6 pole FLC/SC = 1.8/5.4A input = 810W	21.4	3.24	23	59	A2 Dia. = 710mm 6 pole FLC/SC = 1.5/4.5A input = 680W	21.4	3.02	34	60	1 3/8"	5/8"	137	26	10
SM201-64		25.1	3.04	21	59		25.7	2.84	32	60	1 3/8"	5/8"	206	38	12
SM202-44		42.6	6.48	23	62		43.0	6.04	34	63	2 1/8"	5/8"	275	49	19
SM202-64		50.3	6.08	21	62		51.1	5.66	32	63	2 1/8"	1 1/8"	412	72	24
SM203-44		64.4	9.72	23	64		65.2	9.06	34	65	2 1/8"	1 1/8"	412	71	29
SM203-64		76.0	9.14	21	64		72.6	8.50	32	65	2 1/8"	1 1/8"	619	106	36
SM242-44		-	-	-	-	A4 Dia. = 800mm 8 pole FLC/SC = 2.7/6.8A input = 1000W	54.9	7.70	39	66	2 1/8"	1 1/8"	330	59	19
SM242-64		-	-	-	-		63.8	7.22	36	66	2 1/8"	1 1/8"	495	87	24
SM243-44		-	-	-	-		82.6	11.6	39	68	2 1/8"	1 1/8"	495	85	29
SM243-64		-	-	-	-		97.2	10.84	36	68	2 5/8"	1 1/8"	742	128	36
SM244-44		-	-	-	-		108.6	15.40	39	69	2 5/8"	1 1/8"	660	114	38
SM244-64		-	-	-	-		131.1	14.44	36	69	2 x 2 1/8"	2 x 1 1/8"	990	166	48
SM302-44		-	-	-	-	A4 Dia. = 800mm 8 pole FLC/SC = 2.7/6.8A input = 1000W	61.2	8.18	41	66	2 1/8"	1 1/8"	412	74	19
SM302-64		-	-	-	-		73.4	7.80	39	66	2 1/8"	1 1/8"	619	109	29
SM303-44		-	-	-	-		92.2	12.28	41	68	2 x 2 1/8"	2 x 7/8"	619	107	29
SM303-64		-	-	-	-		109.8	12.68	39	68	2 x 2 1/8"	2 x 1 1/8"	928	158	43
SM304-44		-	-	-	-		123.1	16.34	41	69	2 x 2 1/8"	2 x 1 1/8"	825	140	38
SM304-64		-	-	-	-		147.2	15.58	39	69	2 x 2 1/8"	2 x 1 1/8"	1237	208	58

4mm specification Low temperature - High face velocity, high capacity, high air throw, compact unit

Model	Air entering -35 °C to 0 °C Propeller					Connections		Surface area	Internal volume	Defrost power
	Fan / Motor	R404A capacity	Air volume	Air throw	Noise	Outlet	Inlet			
		kW	m³/s	m	dB(A)			m²	dm³	kW
SM161-44	A3 Dia. = 630mm 4 pole FLC/SC = 3.8/14A input = 1890W	22.8	3.76	48	69	1 5/8"	5/8"	110	20	7
SM161-64		28.1	3.58	46	69	1 5/8"	5/8"	165	30	10
SM162-44		45.7	7.52	44	72	2 1/8"	7/8"	220	38	14
SM162-64		56.0	7.14	46	72	2 1/8"	1 1/8"	330	58	19
SM163-44		68.4	11.28	48	74	2 1/8"	1 1/8"	330	57	22
SM163-64		84.4	10.72	46	74	2 5/8"	1 1/8"	495	84	29
SM201-44	A5 Dia. = 800mm 6 pole FLC/SC = 3.4/15A input = 2000W	29.8	5.04	51	71	1 5/8"	5/8"	137	26	10
SM201-64		36.5	4.66	47	71	1 5/8"	5/8"	206	38	12
SM202-44		59.5	10.08	51	72	2 1/8"	1 1/8"	275	49	19
SM202-64		73.3	9.32	47	72	2 1/8"	1 1/8"	412	72	24
SM203-44		90.4	15.10	51	74	2 5/8"	1 1/8"	412	71	29
SM203-64		109.8	13.96	47	74	2 x 2 1/8"	2 x 1 1/8"	619	106	36
SM242-44	A5 Dia. = 800mm 6 pole FLC/SC = 3.4/15A input = 2000W	67.2	10.74	54	72	2 1/8"	1 1/8"	330	59	19
SM242-64		81.7	10.08	51	72	2 1/8"	1 1/8"	495	87	24
SM243-44		101.2	16.16	54	74	2 1/8"	1 1/8"	495	85	29
SM243-64		123.1	15.40	51	74	2 x 2 1/8"	2 x 1 1/8"	742	128	36
SM244-44		132.2	21.48	54	75	2 x 2 1/8"	2 x 1 1/8"	660	114	38
SM244-64		162.2	20.14	51	75	2 x 2 1/8"	2 x 1 1/8"	990	166	48
SM302-44	A6 Dia. = 1000mm 6 pole FLC/SC = 5.8/24A input = 2525W	83.8	13.38	54	78	2 1/8"	1 1/8"	412	74	19
SM302-64		99.8	12.22	49	78	2 x 2 1/8"	2 x 1 1/8"	419	109	29
SM303-44		126.5	20.08	54	79	2 x 2 1/8"	2 x 1 1/8"	619	107	29
SM303-64		150.7	18.34	49	79	2 x 2 1/8"	2 x 1 1/8"	928	158	43
SM304-44		165.6	26.78	54	81	2 x 2 1/8"	2 x 1 1/8"	825	140	38
SM304-64		199.0	24.44	49	81	2 x 2 5/8"	2 x 1 1/8"	1237	208	58

6mm specification High/low temperature - Low face velocity, low capacity, low air throw, compact unit

Model	Air entering -25 °C to + 20 °C Propeller					Air entering -25 °C to + 20 °C Ducted Axial					Connections		Surface area	Internal volume	Defrost power
	Fan / Motor	R404A capacity	Air volume	Air throw	Noise	Fan / Motor	R404A capacity	Air volume	Air throw	Noise	Outlet	Inlet			
		kW	m³/s	m	dB(A)		kW	m³/s	m	dB(A)			m²	dm³	kW
SM161-46	P1 Dia. = 630mm 6 pole FLC/SC = 1.4/5A input = 650W	14.8	2.70	19	59	A1 Dia. = 630mm 6 pole FLC/SC = 1.5/4.5A input = 7W	15.4	2.88	37	58	1 3/8"	1/2"	75	20	7
SM161-66		18.6	2.56	18	59		19.4	2.72	35	58	1 3/8"	5/8"	112	30	10
SM161-86		-	-	-	-		21.4	2.56	33	58	1 3/8"	5/8"	149	40	12
SM162-66		37.4	5.10	18	62		39.0	5.44	35	61	1 5/8"	5/8"	224	57	19
SM162-86		-	-	-	-		43.2	5.12	33	61	2 1/8"	7/8"	299	77	24
SM163-64		56.2	7.66	18	64		58.7	8.18	35	63	2 1/8"	1 1/8"	336	84	29
SM163-44		-	-	-	-		65.0	7.68	33	63	2 1/8"	1 1/8"	448	112	39
SM201-66	P1 Dia. = 630mm 6 pole FLC/SC = 1.4/5A input = 650W	21.9	3.14	22	59	A2 Dia. = 710mm 6 pole FLC/SC = 1.8/.3A input = 620W	22.2	2.98	34	60	1 3/8"	5/8"	140	38	12
SM201-86		-	-	-	-		24.8	2.88	33	60	1 5/8"	5/8"	187	50	14
SM202-66		43.8	6.28	22	62		44.6	5.94	34	63	2 1/8"	7/8"	280	72	24
SM202-86		-	-	-	-		49.4	5.76	33	63	2 1/8"	1 1/8"	374	96	29
SM203-66		65.9	9.42	22	64		47.1	8.92	34	65	2 1/8"	1 1/8"	420	106	36
SM203-86		-	-	-	-		74.1	8.64	33	65	2 1/8"	1 1/8"	561	140	43
SM242-66		-	-	-	-	A4 Dia. = 800mm 8 pole FLC/SC = 2.7/6.8A input = 1000W	57.0	7.70	39	66	2 1/8"	1 1/8"	336	87	24
SM242-86		-	-	-	-		63.3	7.32	37	66	2 1/8"	1 1/8"	448	115	29
SM243-66		-	-	-	-		85.8	11.60	39	68	2 1/8"	1 1/8"	505	127	36
SM243-86		-	-	-	-		95.8	11.02	37	68	2 x 2 1/8"	2 x 1 1/8"	673	168	43
SM244-66		-	-	-	-		114.4	15.40	39	69	2 x 2 1/8"	2 x 1 1/8"	673	166	48
SM244-86		-	-	-	-		126.5	14.64	37	69	2 x 2 1/8"	2 x 1 1/8"	897	221	58
SM302-66		-	-	-	-	A4 Dia. = 800mm 8 pole FLC/SC = 2.7/6.8A input = 1000W	63.4	8.18	41	66	2 1/8"	1 1/8"	420	109	29
SM302-86		-	-	-	-		71.4	7.88	40	66	2 1/8"	1 1/8"	561	144	38
SM303-66		-	-	-	-		96.0	12.26	41	68	2 x 2 1/8"	2 x 1 1/8"	631	158	43
SM303-86		-	-	-	-		107.4	11.88	40	68	2 x 2 1/8"	2 x 1 1/8"	841	210	58
SM304-66		-	-	-	-		127.7	16.34	41	69	2 x 2 1/8"	2 x 1 1/8"	841	208	58
SM304-86		-	-	-	-		142.6	15.78	40	69	2 x 2 1/8"	2 x 1 1/8"	1121	276	77

6mm specification Low temperature - High face velocity, high capacity, high air throw, compact unit

Model	Air entering -35 °C to 0 °C Propeller					Connections		Surface area	Internal volume	Defrost power
	Fan / Motor	R404A capacity	Air volume	Air throw	Noise	Outlet	Inlet			
		kW	m³/s	m	dB(A)			m²	dm³	kW
SM161-46	A3 Dia. = 630mm 4 pole FLC/SC = 3.8/14A input = 1890W	17.8	3.86	50	69	1 5/8"	5/8"	75	20	7
SM161-66		23.2	3.62	46	69	1 5/8"	5/8"	112	30	10
SM161-86		26.8	3.52	45	69	1 5/8"	5/8"	149	40	12
SM162-66		46.8	7.24	46	72	2 1/8"	1 1/8"	224	57	19
SM162-86		52.8	7.06	45	72	2 1/8"	1 1/8"	299	77	24
SM163-64		70.2	10.86	46	74	2 1/8"	1 1/8"	336	84	29
SM163-44		80.9	10.58	45	74	2 1/8"	1 1/8"	448	112	39
SM201-66	A5 Dia. = 800mm 6 pole FLC/SC = 3.4/15A input = 2000W	30.8	4.94	50	71	1 5/8"	5/8"	140	38	12
SM201-86		34.9	4.76	48	71	1 5/8"	5/8"	187	50	14
SM202-66		61.8	9.88	50	72	2 1/8"	1 1/8"	280	72	24
SM202-86		71.0	9.50	48	72	2 1/8"	1 1/8"	374	96	29
SM203-66		93.0	14.82	50	74	2 x 2 1/8"	2 x 1 1/8"	420	106	36
SM203-86		105.8	14.26	48	74	2 5/8"	1 1/8"	561	140	43
SM242-66	A5 Dia. = 800mm 6 pole FLC/SC = 3.4/15A input = 2000W	69.2	10.64	54	72	2 1/8"	1 1/8"	336	87	24
SM242-86		79.0	10.16	51	72	2 1/8"	1 1/8"	448	115	29
SM243-66		104.0	15.96	54	74	2 x 2 1/8"	2 x 1 1/8"	505	127	36
SM243-86		118.5	15.30	52	74	2 x 2 1/8"	2 x 1 1/8"	673	168	43
SM244-66		139.2	21.28	54	75	2 x 2 1/8"	2 x 1 1/8"	673	166	48
SM244-86		154.1	20.34	51	75	2 x 2 1/8"	2 x 1 1/8"	897	221	58
SM302-66	A6 Dia. = 1000mm 6 pole FLC/SC = 5.8/24A input = 2625W	86.0	13.20	53	78	2 x 2 1/8"	2 x 7/8"	420	109	29
SM302-86		97.8	12.52	51	78	2 x 2 1/8"	2 x 1 1/8"	561	144	38
SM303-66		130.0	19.78	53	79	2 x 2 1/8"	2 x 1 1/8"	631	158	43
SM303-86		146.1	18.82	51	79	2 x 2 1/8"	2 x 1 1/8"	841	210	58
SM304-66		173.7	26.38	53	81	2 x 2 5/8"	2 x 1 1/8"	841	208	58
		190.9	25.02	51	81	2 x 2 5/8"	2 x 1 1/8"	1121	276	77

8mm specification High/low temperature - Low face velocity, low capacity, low air throw, compact unit

Model	Air entering -25 °C to + 20 °C Propeller					Air entering -25 °C to + 20 °C Ducted Axial					Connections		Surface area	Internal volume	Defrost power
	Fan / Motor	R404A capacity	Air volume	Air throw	Noise	Fan / Motor	R404A capacity	Air volume	Air throw	Noise	Outlet	Inlet			
		kW	m^3/s	m	dB(A)		kW	m^3/s	m	dB(A)			m^2	dm^3	kW
SM161-48	P1 Dia. = 630mm 6 pole FLC/SC = 1.4/5A input = 650W	12.2	2.70	19	59	A1 Dia. = 630mm 6 pole FLC/SC = 1.5/4.5A input = 710W	12.8	2.88	37	58	1 3/8"	1/2"	57	20	7
SM161-68		15.8	2.60	18	59		16.6	2.78	36	58	1 3/8"	5/8"	86	30	10
SM161-88		-	-	-	-		19.2	2.68	34	58	1 3/8"	5/8"	114	40	12
SM162-68		31.9	5.20	18	62		33.2	5.56	36	61	1 5/8"	5/8"	171	57	19
SM162-88		-	-	-	-		38.2	5.34	34	61	2 1/8"	7/8"	228	77	24
SM163-68		48.0	7.80	18	64		50.0	8.34	36	63	2 1/8"	1 1/8"	257	84	29
SM163-48		-	-	-	-		58.2	8.02	34	63	2 1/8"	1 1/8"	343	112	39
SM201-68	P1 Dia. = 630mm 6 pole FLC/SC = 1.4/5A input = 650W	18.7	3.20	22	59	A2 Dia. = 710mm 6 pole FLC/SC = 1.5/4.5A input = 680W	18.8	3.02	34	60	1 3/8"	5/8"	107	38	12
SM201-88		-	-	-	-		20.0	2.92	33	60	1 5/8"	5/8"	143	50	14
SM202-68		37.4	6.38	22	62		37.6	6.04	34	63	2 1/8"	7/8"	214	72	24
SM202-88		-	-	-	-		44.2	5.86	33	63	2 1/8"	1 1/8"	286	96	29
SM203-68		56.6	9.58	22	64		57.2	9.06	34	65	2 1/8"	1 1/8"	321	106	36
SM203-88		-	-	-	-		66.0	8.78	33	65	2 1/8"	1 1/8"	428	140	43
SM242-68		-	-	-	-	A4 Dia. = 800mm 8 pole FLC/SC = 2.7/6.8A input = 1000W	48.7	7.88	40	66	2 1/8"	1 1/8"	257	87	24
SM242-88		-	-	-	-		56.4	7.70	39	66	2 1/8"	1 1/8"	343	115	29
SM243-68		-	-	-	-		73.6	11.88	40	68	2 1/8"	1 1/8"	386	127	36
SM243-88		-	-	-	-		86.0	11.60	39	68	2 x 2 1/8"	2 x 7/8"	514	168	43
SM244-68		-	-	-	-		97.4	15.78	40	69	2 x 2 1/8"	2 x 1 1/8"	514	166	48
SM244-88		-	-	-	-		113.4	15.40	39	69	2 x 2 1/8"	2 x 1 1/8"	685	221	58
SM302-68		-	-	-	-	A4 Dia. = 800mm 8 pole FLC/SC = 2.7/6.8A input = 1000W 2 x 3/4"	55.0	8.36	42	66	2 1/8"	1 1/8"	321	109	29
SM302-88		-	-	-	-		63.8	8.18	41	66	2 1/8"	1 1/8"	428	144	38
SM303-68		-	-	-	-		82.5	12.54	42	68	2 x 2 1/8"	2 x 7/8"	482	158	43
SM303-88		-	-	-	-		94.2	12.26	41	68	2 x 2 1/8"	2 x 1 1/8"	643	210	58
SM304-68		-	-	-	-		108.2	16.72	42	69	2 x 2 1/8"	2 x 1 1/8"	643	208	58
SM304-88		-	-	-	-		127.7	16.34	41	69	2 x 2 1/8"	2 x 1 1/8"	857	276	77

SM Cooler DT1 - WET

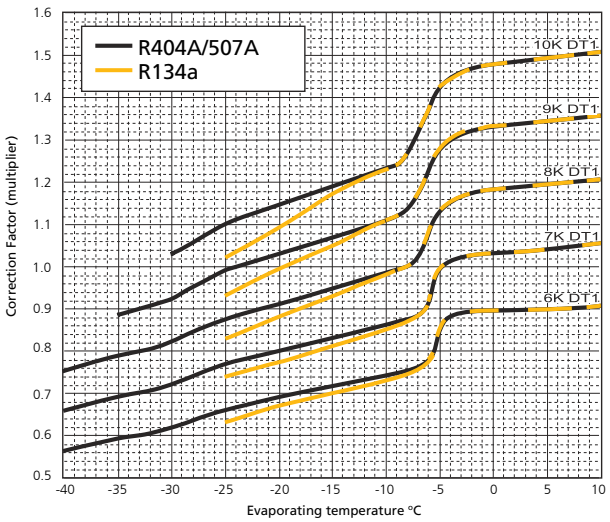

Rating Conditions and Correction Factors

The duties shown in this catalogue are at Eurovent Standard 7/C/001, Standard Condition 2 - (-8°C saturated suction temp. (dewpoint), 0°C air entering). Capacities are based on DT1 the difference between the entering air temperature and the saturated suction temperature at the outlet of the cooler.

Defrost

Defrost loads include drain pan power as below.

Modules	FM--1	FM--2	FM--3	FM--4
Drainpan	1.6	3.2	4.8	6.4

Peripheral heater load (where fitted) for ducted axial fan sets 800mm diameter = 630W, 900mm diameter = 710W per fan

8mm specification Low temperature - High face velocity, high capacity, high air throw, compact unit

Model	Air entering -35 °C to 0 °C					Connections		Surface area	Internal volume	Defrost power
	Propeller									
	Fan / Motor	R404A capacity	Air volume	Air throw	Noise	Outlet	Inlet			
		kW	m^3/s	m	dB(A)			m^2	dm^3	kW
SM161-48	A3 Dia. = 630mm 4 pole FLC/SC = 3.8/14A input = 1890W	15.2	3.94	51	69	1 3/8"	1/2"	57	20	7
SM161-68		20.0	3.80	49	69	1 5/8"	5/8"	86	30	10
SM161-88		24.0	3.72	48	69	1 5/8"	5/8"	114	40	12
SM162-68		40.0	7.62	49	72	2 1/8"	7/8"	171	57	19
SM162-88		48.0	7.42	48	72	2 1/8"	1 1/8"	228	77	24
SM163-68		60.0	11.42	49	74	2 1/8"	1 1/8"	257	84	29
SM163-88		72.2	11.14	48	74	2 1/8"	1 1/8"	343	112	39
SM201-68	A5 Dia. = 800mm 6 pole FLC/SC = 3.4/15A input = 2000W	26.2	5.14	52	71	1 5/8"	5/8"	107	38	12
SM201-88		30.6	4.94	50	71	1 5/8"	5/8"	143	50	14
SM202-68		52.8	10.26	52	72	2 1/8"	1 1/8"	214	72	24
SM202-88		62.6	9.88	50	72	2 1/8"	1 1/8"	286	96	29
SM203-68		78.4	15.40	52	74	2 x 2 1/8"	2 x 7/8"	321	106	36
SM203-88		93.6	14.82	50	74	2 5/8"	1 1/8"	428	140	43
SM242-68	A5 Dia. = 800mm 6 pole FLC/SC = 3.4/15A input = 2000W	57.6	10.84	55	72	2 1/8"	1 1/8"	257	87	24
SM242-88		69.6	10.54	53	72	2 1/8"	1 1/8"	343	115	29
SM243-66		86.4	16.24	55	74	2 x 2 1/8"	2 x 1 1/8"	386	127	36
SM243-88		104.8	15.86	53	74	2 x 2 1/8"	2 x 1 1/8"	514	168	43
SM244-68		118.5	21.66	55	75	2 x 2 1/8"	2 x 1 1/8"	514	166	48
SM244-88		135.7	21.10	53	75	2 x 2 1/8"	2 x 1 1/8"	685	221	58
SM302-68	A6 Dia. = 1000mm 6 pole FLC/SC = 5.8/24A input = 2625W	72.8	13.68	55	78	2 x 2 1/8"	2 x 7/8"	321	109	29
SM302-88		87.1	13.10	53	78	2 x 2 1/8"	2 x 1 1/8"	428	144	38
SM303-68		110.2	20.56	55	79	2 x 2 1/8"	2 x 1 1/8"	428	158	43
SM303-88		131.1	19.70	53	79	2 x 2 1/8"	2 x 1 1/8"	643	210	58
SM304-68		148.4	27.36	55	81	2 x 2 1/8"	2 x 1 1/8"	643	208	58
SM304-88		169.1	26.20	53	81	2 x 2 1/8"	2 x 1 1/8"	857	276	77

Note: For R407, DT1 is calculated from mid point evaporating temperature

Correction factors

Refrigeration	R404A	R134a	R507A	R407A/F	R407C
Capacity factor (dew point, DT1)	1.00	0.91	0.97	1.18*	1.35*
Refrigerant charge density (kg/dm^3)	0.312	0.338	0.313	0.332	0.332

* Capacity factors for refrigerants with high glide apply only at the nominal rating condition. Refrigerant charges densities are based on 25% of the internal volume being liquid.

Note: All data for 400V, 3 phase, 50Hz supply. Noise levels are quoted at a distance of 3m from the units (free field).Capacities are nominal, based on DT1 dew point and stated at Eurovent standard condition 2 (-8°C saturated suction temp, 0°C air entering).

Correction Factors (Multiply capacity by appropriate correction factor to give performance at chosen conditions)

Peripheral Heaters recommended for use on all ducted axial fan options when operating below freezing.

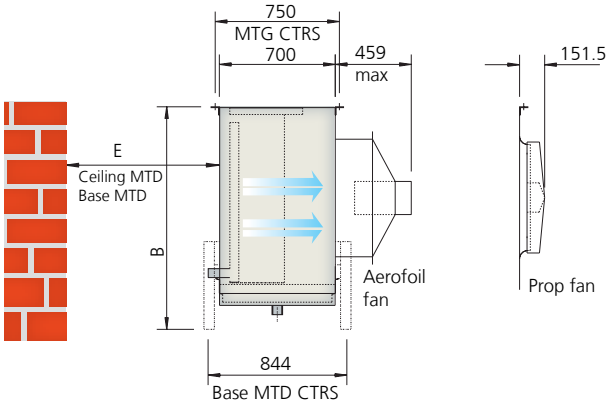

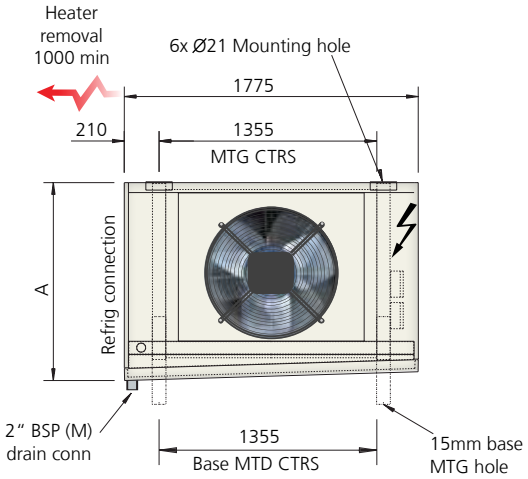

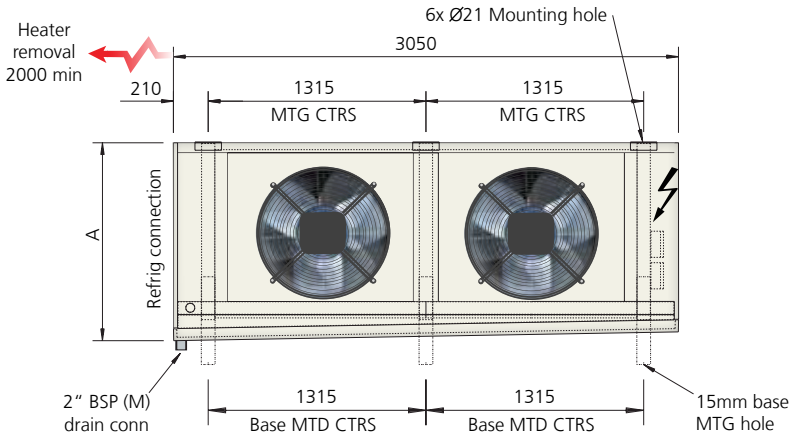

E Min	mm
SM 16	800
SM 20	1000
SM 24	1200
SM 30	1500

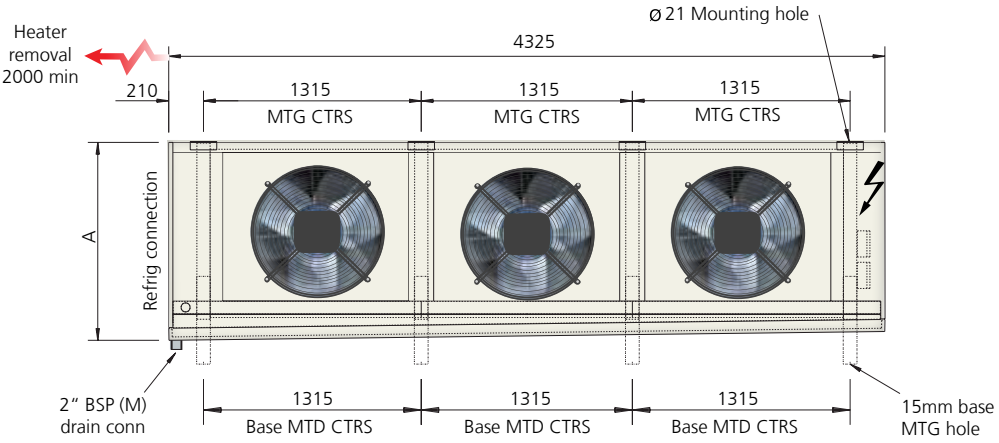

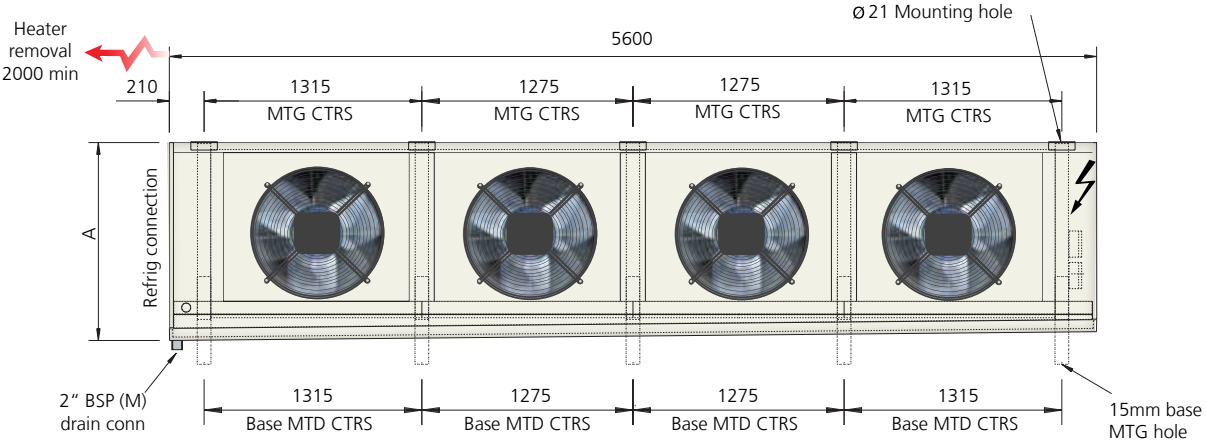

Model	Case height in rows	No. of fans	Fins spacing mm	Unit height ceiling mounted	Unit height base mounted	Unit weight Cu/Al
				(A) mm	(B) mm	kg
161 - 4x	16	1	4	970	1141	218
161 - 6x			6			1173
161 - 8x			8			970
201 - 4x	20	1	4	1173	1344	258
201 - 6x			6			1376
201 - 8x			8			1681
162 - 4x	16	2	4	970	1141	378
162 - 6x			6			1195
162 - 8x			8			1398
202 - 4x	20	2	4	1173	1344	448
202 - 6x			6			1398
202 - 8x			8			1703
242 - 4x	24	2	4	1376	1547	504
242 - 6x			6			591
242 - 8x			8			607
302 - 4x	30	2	4	1681	1852	618
302 - 6x			6			727
302 - 8x			8			739
163 - 4x	16	3	4	992	1141	538
163 - 6x			6			625
163 - 8x			8			635
203 - 4x	20	3	4	1195	1344	642
203 - 6x			6			750
203 - 8x			8			773
243 - 4x	24	3	4	1398	1547	714
243 - 6x			6			844
243 - 8x			8			872
303 - 4x	30	3	4	1703	1852	883
303 - 6x			6			1045
303 - 8x			8			1064
244 - 4x	24	4	4	1398	1547	926
244 - 6x			6			1099
244 - 8x			8			1139
304 - 4x	30	4	4	1703	1852	1148
304 - 6x			6			1365
304 - 8x			8			1389

Note: Weights are maximums, based on 4mm fin spacing

CO_2 Coolers - 75 Bar general features

engineering for a better world





All CO_2 cooler casework is utilise galvanised steel casing white powder coated, oven cured at 180°C to provide a hard durable finish.





GEA Searle offers an expanded range of CO_2 unit coolers for commercial and retail refrigeration applications. The coolers have been optimised to meet the diverse requirements of the developing CO_2 system designs; variables include transcritical, subcritical and standing pressures. GEA Searle have designed a "one size fits all" specification to apply to our most popular ranges. The cooler ranges detailed within this brochure are hybrid versions of our tried and tested TEC, KEC, KMe and DSR coolers. Whilst the coil technology employed is different the overall dimensions and electrical loadings remain as per our standard (non CO_2) ranges.

Coils and Defrost

Maximum operating pressure 75 BarG with aluminium fins as standard. Other fin materials and coatings are available upon request. Flow direction arrows added to connections to reduce on site confusion with the smaller pipe sizes and single circuit (non distributor) coils. Option for electric coil and tray.

Quality Assurance

GEA Searle is a quality assured under the BSEN ISO 9001 encompassing Performance Testing, Manufacturing Systems and Inspection Procedures. The coolers are covered by Searle's full technical support and 24 months warranty.

Cooler range benefits

- Unit coolers combine versatility and aesthetic design
- Consistent performance
- The ideal cooler at a competitive price
- Proven design and reliability in cold rooms, food storage,food preparation and cool cabinets

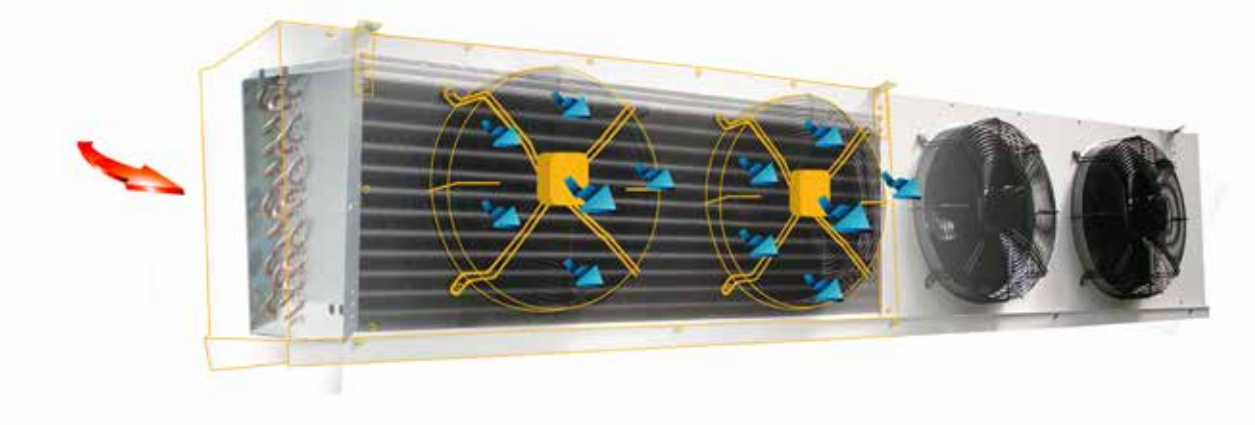

1	2			
KE	C	X	30	L
		3	4	5

1. Range: KE, KM, DS, TE
2. CO_2: C
3. Type: X = direct expansion, P = pump expansion
4. Model: Various
5. Defrost: Blank = no defrost, L = electric

Factors apply to all CO2 Coolers

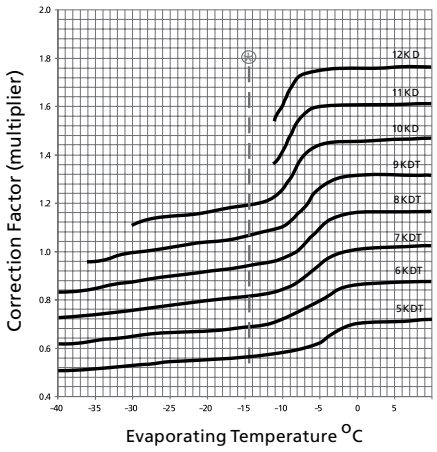

General Notes:

1. Capacities shown at SC2 conditions i.e. 8KDT1, -8°C evaporation temperature.
2. Air throws based upon terminal velocity of 0.25m/s.
3. Fan power is total fan power for the unit.
4. Noise levels quoted @3m 45° directivity within free field conditions.
5. = Designates units which have a low circuit loading. Refer to your supplier for selections below -15 °C evaporating temperature.

KEC Evaporator range

Direct expansion - CX

Model	Capacity kW	Air Vol. m³/s	Surface m²	Int. Vol. dm³	Weight AL - kg	Conn Size		Air Throw m
						inlet	outlet	
K E C X 1 0 ⊛	1.26	0.28	5.05	2	29	3/8″	5/8″	16
K E C X 1 5 ⊛	1.50	0.28	5.05	2	30	3/8″	5/8″	16
K E C X 2 0	1.86	0.29	6.94	3	35	3/8″	5/8″	16
K E C X 2 5	2.40	0.42	6.94	3	35	3/8″	5/8″	22
K E C X 3 0	3.05	0.40	10.41	4	38	3/8″	5/8″	22
K E C X 3 5	3.63	0.58	12.62	4	51	3/8″	5/8″	16
K E C X 4 0	4.40	0.83	12.62	4	51	3/8″	5/8″	22
K E C X 4 5	6.10	0.81	18.94	6	59	1/2″	5/8″	22
K E C X 5 5	7.09	1.25	18.94	6	73	1/2″	5/8″	22
K E C X 7 0	9.04	1.21	28.40	9	83	1/2″	5/8″	22

Pump cirulation - CP

Model	Capacity kW	Air Vol. m³/s	Surface m²	Int. Vol. dm³	Weight AL - kg	Conn Size		Air Throw m
						inlet	outlet	
K E C P 1 0 ⊛	1.62	0.28	5.05	2	29	3/8″	5/8″	16
K E C P 1 5 ⊛	1.85	0.28	5.05	2	30	3/8″	5/8″	16
K E C P 2 0	2.17	0.29	6.94	3	35	3/8″	5/8″	16
K E C P 2 5	2.85	0.42	6.94	3	35	3/8″	5/8″	22
K E C P 3 0	3.51	0.40	10.41	4	38	3/8″	5/8″	22
K E C P 3 5	4.27	0.58	12.62	4	51	3/8″	5/8″	16
K E C P 4 0	5.36	0.83	12.62	4	51	3/8″	5/8″	22
K E C P 4 5	7.00	0.81	18.94	6	59	5/8″	7/8″	22
K E C P 5 5	8.38	1.25	18.94	6	73	5/8″	7/8″	22
K E C P 7 0	10.37	1.21	28.40	9	83	5/8″	7/8″	22

Fan & Noise Data

Model	Fan Detail						Noise
	Qty	Dia mm	Speed rpm	Power W	FLC A	SC A	dB(A) @3m
K E C * 1 0	1	300	1370	33	0.35	0.5	44
K E C * 1 5	1	300	1370	33	0.35	0.5	44
K E C * 2 0	1	300	1370	33	0.35	0.5	44
K E C * 2 5	1	300	1750	77	0.70	1.0	52
K E C * 3 0	1	300	1750	77	0.70	1.0	52
K E C * 3 5	2	300	1370	60	0.35	0.5	47
K E C * 4 0	2	300	1750	140	0.70	1.0	55
K E C * 4 5	2	300	1750	140	0.70	1.0	55
K E C * 5 5	3	300	1750	210	0.70	1.0	57
K E C * 7 0	3	300	1750	210	0.70	1.0	57

Note: Power per unit currents per motor

Dimensions and Defrost Data

Model	Dimensions			Defrost	
	Length mm	Height mm	Width mm	Coil kW	Tray kW
K E C * 1 0	726	461	524	0.68	0.34
K E C * 1 5	726	461	524	0.68	0.34
K E C * 2 0	876	461	524	0.92	0.46
K E C * 2 5	876	461	524	0.92	0.46
K E C * 3 0	876	461	524	0.92	0.46
K E C * 3 5	1326	461	524	1.60	0.80
K E C * 4 0	1326	461	524	1.60	0.80
K E C * 4 5	1326	461	524	1.60	0.80
K E C * 5 5	1826	461	524	2.40	1.20
K E C * 7 0	1826	461	524	2.40	1.20



Note: ⊛ See general notes on page 60 & 61

KMC Evaporator range

Direct expansion - CX

Model	Capacity kW	Air Vol. m³/s	Surface m²	Int. Vol. dm³	Weight AL - kg	Conn Size		Air Throw m
						inlet	outlet	
K M C X 5 0	6.36	0.89	18.26	6	91	1/2"	5/8"	17
K M C X 6 0	7.65	0.96	27.05	9	120	1/2"	5/8"	19
K M C X 8 0	10.08	1.89	24.35	8	137	1/2"	5/8"	19
K M C X 9 5	12.92	1.78	36.52	11	150	1/2"	5/8"	17
K M C X 1 1 5	15.12	2.83	36.52	11	181	1/2"	5/8"	19
K M C X 1 4 0	19.53	2.68	54.78	17	212	5/8"	7/8"	17
K M C X 1 7 5	24.57	3.45	64.92	19	237	5/8"	7/8"	17

Pump cirulation - CP

Model	Capacity kW	Air Vol. m³/s	Surface m²	Int. Vol. dm³	Weight AL - kg	Conn Size		Air Throw m
						inlet	outlet	
K M C P 5 0	7.40	0.89	18.26	6	91	5/8"	7/8"	17
K M C P 6 0	8.65	0.96	27.05	9	120	5/8"	7/8"	19
K M C P 8 0	12.02	1.89	24.35	8	137	5/8"	7/8"	19
K M C P 9 5	14.92	1.78	36.52	12	150	7/8"	1 1/8"	17
K M C P 1 1 5	18.03	2.83	36.52	11	181	7/8"	1 1/8"	19
K M C P 1 4 0	22.49	2.68	54.78	17	212	7/8"	1 1/8"	17
K M C P 1 7 5	28.38	3.45	64.92	20	237	7/8"	1 1/8"	17

Fan & Noise Data

Model	Fan Detail								Noise
	Qty	Dia mm	Speed rpm	Power W	230V - 1ph - 50Hz		400V - 3ph - 50Hz		
					FLC A	SC A	FLC A	SC A	dB(A) @3m
K M C * 5 0	1	400	1410	190	1.05	4.5	0.65	2.75	60
K M C * 6 0	1	400	1410	190	1.05	4.5	0.65	2.75	60
K M C * 8 0	2	400	1410	380	1.05	4.5	0.65	2.75	63
K M C * 9 5	2	400	1410	380	1.05	4.5	0.65	2.75	63
K M C * 1 1 5	3	400	1410	570	1.05	4.5	0.65	2.75	65
K M C * 1 4 0	3	400	1410	570	1.05	4.5	0.65	2.75	65
K M C * 1 7 5	4	400	1410	760	1.05	4.5	0.65	2.75	66

Note: Power per unit currents per motor

Dimensions Defrost Data

Model	Dimensions			Defrost	
	Length mm	Height mm	Width mm	Coil kW	Tray kW
K M C * 5 0	1007	575	536	1.59	0.80
K M C * 6 0	1332	575	536	2.40	1.20
K M C * 8 0	1682	575	536	3.18	1.59
K M C * 9 5	1682	575	536	3.18	1.59
K M C * 1 1 5	2357	575	536	4.80	2.40
K M C * 1 4 0	2357	575	536	4.80	2.40
K M C * 1 7 5	2732	575	536	5.64	2.82

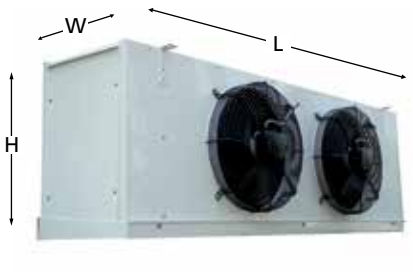

Note: ⊛ See general notes on pages 60 & 61

DSC Evaporator range

Direct expansion - CX

Model	Capacity		Air Vol		Surface	Int. Vol	Weight	Conn Size		Air Throw	
	HS - kW	LS - kW	HS - m³/s	LS - m³/s	m²	dm³	AL - kg	inlet	outlet	HS - m	LS - m
DSCX19 ⊛	1.92	1.21	0.31	0.17	5.95	3	58	3/8"	5/8"	11	7
DSCX22	2.47	1.52	0.30	0.16	8.93	3	62	3/8"	5/8"	11	7
DSCX36	3.60	2.31	0.61	0.34	10.82	4	82	1/2"	5/8"	12	8
DSCX42	4.77	2.95	0.59	0.32	16.23	6	90	1/2"	5/8"	11	7
DSCX51	5.80	3.78	0.92	0.50	16.23	5	109	1/2"	5/8"	12	8
DSCX62	7.02	4.61	0.88	0.49	24.35	8	121	1/2"	5/8"	11	7
DSCX68	7.62	5.16	1.22	0.67	21.64	7	139	1/2"	5/8"	12	8
DSCX83	9.61	6.00	1.18	0.65	32.46	10	154	1/2"	5/8"	11	7
DSCX100	11.17	7.51	1.72	0.98	36.07	11	166	1/2"	5/8"	11	7
DSCX116	13.06	8.64	1.56	0.89	54.10	16	189	1/2"	5/8"	11	7

Pump cirulation - CP

Model	Capacity		Air Vol		Surface	Int. Vol	Weight	Conn Size		Air Throw	
	HS - kW	LS - kW	HS - m³/s	LS - m³/s	m²	dm³	AL - kg	inlet	outlet	HS - m	LS - m
DSCP19 ⊛	2.26	1.41	0.31	0.17	5.95	3	58	3/8"	5/8"	11	7
DSCP22	2.78	1.66	0.30	0.16	8.93	3	62	3/8"	5/8"	11	7
DSCP36	4.31	2.71	0.61	0.34	10.82	4	82	5/8"	7/8"	12	8
DSCP42	5.38	3.23	0.59	0.32	16.23	6	90	5/8"	7/8"	11	7
DSCP51	6.74	4.25	0.92	0.50	16.23	5	109	5/8"	7/8"	12	8
DSCP62	8.02	5.03	0.88	0.49	24.35	8	121	5/8"	7/8"	11	7
DSCP68	8.92	5.78	1.22	0.67	21.64	7	139	5/8"	7/8"	12	8
DSCP83	10.81	6.57	1.18	0.65	32.46	10	154	5/8"	7/8"	11	7
DSCP100	12.87	8.41	1.72	0.98	36.07	11	166	5/8"	7/8"	11	7
DSCP116	14.74	9.34	1.56	0.89	54.10	16	189	5/8"	7/8"	11	7

Fan & Noise Data

Model	Fan Detail									Noise	
	Qty	Dia mm	Speed rpm HS/LS	HS - High Speed			LS - Low Speed				
				Power W	FLC A	SC A	Power W	FLC A	SC A	dB(A) @3m	dB(A) @3m
DSC*19	1	305	1300/750	64	0.30	0.4	26	0.14	0.14	49	34
DSC*22	1	305	1300/750	64	0.30	0.4	26	0.14	0.14	49	34
DSC*36	2	305	1300/750	128	0.30	0.4	52	0.14	0.14	51	37
DSC*42	2	305	1300/750	128	0.30	0.4	52	0.14	0.14	51	37
DSC*51	3	305	1300/750	192	0.30	0.4	78	0.14	0.14	54	39
DSC*62	3	305	1300/750	192	0.30	0.4	78	0.14	0.14	54	39
DSC*68	4	305	1300/750	256	0.30	0.4	104	0.14	0.14	55	40
DSC*83	4	305	1300/750	256	0.30	0.4	104	0.14	0.14	55	40
DSC*100	4	305	1400/800	640	0.81	1.9	376	0.87	1.98	60	48
DSC*116	4	305	1400/800	640	0.81	1.9	376	0.87	1.98	60	48

Note: Power per unit currents per motor

Dimensions Defrost Data

Model	Dimensions			Defrost	
	Length mm	Height mm	Width mm	Coil kW	Tray kW
DSC*19	870	266	910	0.00	1.58
DSC*22	870	266	910	0.00	1.58
DSC*36	1320	266	910	0.00	2.85
DSC*42	1320	266	910	0.00	2.85
DSC*51	1820	266	910	0.00	4.27
DSC*62	1820	266	910	0.00	4.27
DSC*68	2320	266	910	0.00	5.70
DSC*83	2320	266	910	0.00	5.70
DSC*100	2320	351	910	2.00	5.67
DSC*116	2320	351	910	2.00	5.67



Note: ⊛ = See general notes on pages 60 & 61

TEC Evaporator range

Direct expansion - CX

Model	Capacity kW	Air Vol. m³/s	Surface m²	Int. Vol. dm³	Weight AL - kg	Conn Size		Air Throw m
						inlet	outlet	
TECX1 ⊛	0.34	0.16	1.07	1	8	3/8"	5/8"	4
TECX2 ⊛	0.66	0.14	2.13	1	9	3/8"	5/8"	4
TECX3 ⊛	0.84	0.16	3.02	2	11	3/8"	5/8"	4
TECX3.5 ⊛	1.00	0.17	3.99	2	14	3/8"	5/8"	4
TECX4 ⊛	1.37	0.28	3.99	2	15	3/8"	5/8"	4
TECX5	1.81	0.31	5.36	2	19	3/8"	5/8"	5
TECX6	2.22	0.34	7.14	3	21	3/8"	5/8"	5
TECX7	2.86	0.47	7.57	3	27	3/8"	5/8"	5
TECX8	3.30	0.50	10.10	4	31	3/8"	5/8"	5

Pump cirulation - CP

Model	Capacity kW	Air Vol. m³/s	Surface m²	Int. Vol. dm³	Weight AL - kg	Conn Size		Air Throw m
						inlet	outlet	
TECP1 ⊛	0.50	0.16	1.07	1	8	3/8"	5/8"	4
TECP2 ⊛	0.84	0.14	2.13	1	9	3/8"	5/8"	4
TECP3 ⊛	1.02	0.16	3.02	2	11	3/8"	5/8"	4
TECP3.5 ⊛	1.19	0.17	3.99	2	14	3/8"	5/8"	4
TECP4 ⊛	1.75	0.28	3.99	2	15	3/8"	5/8"	4
TECP5	2.17	0.31	5.36	2	19	3/8"	5/8"	5
TECP6	2.56	0.34	7.14	3	21	3/8"	5/8"	5
TECP7	3.35	0.47	7.57	3	27	3/8"	5/8"	5
TECP8	3.82	0.50	10.10	4	31	3/8"	5/8"	5

Fan & Noise Data

Model	Fan Detail						Noise
	Qty	Dia mm	Speed rpm	Power W	FLC A	SC A	dB(A) @3m
TGC*1	1	230	1400	20	0.2	0.9	57
TGC*2	1	230	1400	20	0.2	0.9	55
TGC*3	1	230	1400	20	0.2	0.9	56
TGC*3.5	1	230	1400	20	0.2	0.9	56
TGC*4	2	230	1400	40	0.2	0.9	59
TGC*5	2	230	1400	40	0.2	0.9	57
TGC*6	2	230	1400	40	0.2	0.9	55
TGC*7	3	230	1400	60	0.2	0.9	60
TGC*8	3	230	1400	60	0.2	0.9	58

Note: Power per unit currents per motor

Dimensions Defrost Data

Model	Dimensions			Defrost	
	Length mm	Height mm	Width mm	Coil kW	Tray kW
TEC*1	525	180	375	275	2 x 250
TEC*2	525	180	375	550	2 x 250
TEC*3	690	180	375	700	2 x 325
TEC*3.5	865	180	375	900	2 x 425
TEC*4	865	180	375	900	2 x 425
TEC*5	1120	180	375	1000	2 x 575
TEC*6	1120	230	375	1000	2 x 675
TEC*7	1530	180	375	1400	2 x 1030
TEC*8	1530	230	375	1400	2 x 1030



Note: ⊛ = See general notes on pages 60 & 61

New generation of fans and motors
Combined expertise in heat transfer



Ziehl-Abegg Fe2 Owlet and EC technology plays an integral role in GEA Condensers and Dry Coolers providing effective capacity control whilst retaining high energy efficiency and low noise levels, all at a competitive price. These speed control fansets can provide significant benefits over alternative motors and are ideally suited to the following application areas:- Commercial refrigeration, Building HVAC, Industrial refrigeration Process Cooling, Power Generation and Convenience Stores. GEA has the technical expertise to advise and select products for any application where energy efficiency, low noise and cost effective solutions are required. EC (Electronically Commutated) technology is a tried and tested technology which has been utilised by for a number of years.

The Adantages of EC Fansets

- Reduced energy usage and Low operating cost, providing short pay-back periods.
- Continuous speed control across the full operating range.
- Low noise compared to a similar unit fitted with step control.
- High efficiency across the full operational range.
- Simple to connect to AC mains supply.
- High efficiency across the full operational range to an asynchronous motor and 3 year warranty.
- Operation at peak load via the over speed function is
- pre-programmed into the control system.
- Integrated protective features; Phase failure detection; Over-current and temperature.
- Networked and bus-linked installations are easy to realise (RS485).
- Night time set back at night, operation at extremely low noise can be achieved through stepless speed control.
- Built in fail-safe features, including individual integrated electronics, self-regulating motors and internal motor protection.

The motors used in EC fansets are simply brush-less DC motors with characteristics similar to a “shunt” motor. Unlike the conventional motors where an AC current in the stator induces the magnetic field in the rotor, EC motors use permanent magnets, so the current in the stator is used solely to generate the torque not secondary magnetic fields. Therefore, with fewer losses the EC motor is inherently more efficient than the AC motor. Conventional DC motors use brushes to switch the supply and these wear over time; the new generation of EC motors use commutation electronics to sense the rotor position and switch supply. As switching is undertaken electronically with no physical contacts there is no wear and so reliability is increased.

High Energy-saving potential - The cost of energy has nearly tripled in recent years and is predicted to rise in the future. Rising energy costs means energy efficiency is becoming a key factor within industry issue and is rising in importance on end-user criteria. A GEA unit equipped with EC technology has a high energy saving rating, which in turn, translates into lower running costs.

The energy savings gained by relying on EC technology translates into short payback times when measured against the initial procurement costs. Moreover, the maintenance free and exceptionally high service life results in additional big savings.

High efficiency and low noise - The EC motor has a high efficiency at every speed. At nominal speed, there is energy saving of around 10% when compared to conventional AC options. At reduced speed the saving is substantially more pronounced. Where noise levels are a key consideration, a unit with EC technology helps by reducing perceived noise when compared to a similar unit with step control.

Fail-safe safety - Refrigeration plants operate 24 hours a day, therefore, both energy costs and fail-safety are crucial factors. EC motors are equipped with several fail-safe features helping to ensure disruption is minimal in the event of a failure. Each motor is fitted with an individual power unit, unlike traditional units with a single inverter. Should an EC fan inverter fail the other fans on the unit will remain fully functioning and in most cases compensate for the loss of one fan. In addition each fanset has internal motor protection.

GEA Searle - Terms and Conditions

1. GENERAL

Special attention is drawn to the Warranty.

The following words shall have the following meanings in these Conditions.

(a) The "Buyer" is the person firm or company with whom the Seller has entered into the Contract.

(b) The "Conditions" shall mean the terms and conditions set out below. (c) The "Contract" is the agreement (as referred to in clause 2) to supply particular Goods. (d) The "Goods" are the goods sold by the Seller to the Buyer. (e) The "Seller" is GEA Searle LTD.

(f) "Warranty" shall mean the warranty to be given to the Buyer pursuant to clause 14. (g) In "Writing" is any memorandum or letter signed on behalf of the Seller by a duly authorised representative. In the case of a letter sent to the Buyer the Seller shall be entitled to assume that its terms are agreed unless notified to the contrary in writing within 7 days.

2. THE CONTRACT

(a) The Goods are sold subject to the Conditions which shall supersede all other terms and conditions, representations or undertakings made by the Buyer or the Seller or otherwise and nothing said or written during the course of negotiationsbetween the Buyer and Seller shall have contractual or other legal effect unless agreed in accordance with the Conditions. (b) The Contract shall not be varied unless the Seller expressly agrees the variation in Writing or the Conditions expressly provide otherwise. (c) The giving of any delivery instructions, the acceptance of or payment for the Goods or any conduct in confirmation of the transaction hereby contemplated shall constitute unqualified acceptance by the Buyer of the Conditions. d) The buyer can only cancel the contract with written consent of the seller. Cancellation charges may be imposed.

3. PRICE

Unless otherwise agreed in Writing the price of the Goods shall be calculated in accordance with the Seller's price list in force at the date of delivery of the Goods.

4. PAYMENT

(a) Payment is due by the end of the month following the month during which risk passed to the Buyer, unless other terms have been agreed in Writing. These terms of payment must be strictly observed. If the Buyer is in breach of the Contract then all payments shall become immediately due and payable. (b) If any sum due hereunder or any other sum due to the Seller is not paid in full by the due date or if before such date the Seller believes that the Buyer is unable or unwilling to make such payment in full then the Seller shall have the right either to suspend delivery of the Goods pending payment of such sums or to terminate the Contract forthwith. (c) Interest shall be payable by the Buyer from the date by which payment should have been made till the date of payment (both before and after judgement) on the unpaid amount on a daily basis at the rate of 4% per annum above the base lending rate of Danske Bank from time to time in force unless otherwise specified. (d) The Buyer shall not be entitled to withhold payment of all or any of the purchase price while any claim in relation to the Goods or other dispute is being investigated by the Seller and without limitation no deduction shall be made by the Buyer in respect of any set-off or counter-claim howsoever arising.

5. DELIVERY

(a) The place of and the date of delivery shall be as agreed between the Buyer and the Seller. However the date for delivery is the Seller's best estimate based on present information and subject to sub-clause (b) below The Seller shall not be liable for delay in delivery in any circumstances whatsoever (even if caused by the negligence of the Seller its servants or agents) nor for any loss, damage or expense which the Buyer may suffer by reason of such delay. (c) If the date of delivery is important to the Buyer the Seller is prepared to provide a definite date of delivery provided that the date and a limit on the Seller's liability under this sub-clause have both been agreed in Writing as a variation to the Contract.

6. RISK, ACCEPTANCE AND IN STORAGE

(a) The risk in the Goods shall pass to the Buyer on the sooner of the Buyer paying the price in full or the Buyer taking delivery of the Goods or the Seller notifying the Buyer that the Goods are ready for delivery and the Buyer having failed to take delivery of the Goods for whatever reason. (b) Without limitation after risk has passed to the Buyer if the Goods or any item there of are lost, damaged or destroyed from any cause whatsoever (including the negligence of the Seller, its servants or agents) whether or not the Goods are still in the possession of the Seller then the Buyer shall remain liable to pay the price of the Goods in full and if the Seller repairs the Goods the Buyer shall pay the reasonable cost of repairing the Goods. (c) Any change in Delivery Time or the collection date agreed upon between the Seller and the Buyer following the award of the contract or the placing of the order for the Goods by the Buyer will not alter the Seller's production scheduling operations and the Seller shall be entitled, for Goods actually completed and stored by the Seller for delivery or collection after the end of the Delivery Period originally agreed upon, to a storge levey charge equal to zero decimal five percent (0.5%) of the contract value of the Goods so stored for each week of storage commenced untill said Goods have actually been delivered or collected provided howerver that no such storage charge shall be owed by the Buyer if the delay in delivery or collection is due to any reason for which the seller is liable. (d) The seller may in some instances waiver the storage charge if the buyer shall agree to be invoiced and pay for the goods.

7. TITLE TO THE GOODS

(a) Property in the Goods shall not pass to the Buyer until the Buyer has paid to the Seller the whole of the price of the Goods in full and any other payments due from the Buyer. (b) Until the payments referred to in sub-clause (a) above have been made in full the Buyer shall hold the Goods as fiduciary agent for the Seller and shall mark the Goods with an indication that they remain the Seller's property, and they shall be kept separate and identifiable from any other products in the Buyer's possession and shall be returned to the Seller upon request and all the incidence associated with a fiduciary relationship shall apply. (c) Without prejudice to any of the Seller's other remedies the Seller shall have the right with or without prior notice at any time to retake possession of the whole or any part of the Goods (and for that purpose shall be granted an irrevocable licence to go upon any premises occupied by the Buyer or which the Buyer is entitled access to) and to dismantle the Goods or detach the Goods from any items in which they may have been incorporated. (d) The Buyer shall indemnify the Seller against all costs and liabilities which the Seller incurs in retaking possession of the Goods (or any part thereof) or in exercising any of its rights under this Clause including without limitation any liability in respect of any damage (including damage caused to such premises in such retaking of possession and removal of goods) which it was not reasonably practicable to avoid. (e) If any of the Goods supplied by the Seller are incorporated or used as material for other goods before title has passed to the Buyer the property in the whole of such goods shall be and remain with the Seller until such payment has been made. Any sale of such goods by the Buyer shall take place upon the basis that the buyer shall hold on trust for the seller with effect from the date of receipt of the sale proceeds by the Buyer such proportion of those proceeds as is equal to the outstanding price payable by the buyer to the Seller for the Goods.

8. ACCEPTANCE OF GOODS

Unless the Seller is notified to the contrary in writing within 3 days of the date of actual delivery the Goods shall be deemed to have been accepted by the Buyer as being in good condition and in accordance with the Contract.

9. FORCE MAJEURE

(a) Without prejudice to the other terms of the Conditions the Seller shall not be liable if manufacture or delivery or installation is prevented, hindered or delayed by reason of strikes, sit-ins, trade disputes, lock-outs or any other actual or threatened industrial action or by difficulty in obtaining labour, plant, materials or bought in components or by breakdown of plant or machinery (including transport) or by interruption of power supplies, or by fire or by legal action by a third party (whether or not any of the aforesaid are caused by the negligence of the Seller, its servants or agents) or by reason of any circumstances outside the Seller's control which shall include, but not be limited to national emergency, war, civil riot, intervention by Government and all other cases of force majeure. (b) If the manufacture or delivery of the full quantity of Goods due under the Contract is prevented, hindered or delayed by reason of any circumstances within sub-clause (a) for a period greater than 3 months after the agreed delivery date then both the Seller and the Buyer shall be released from their respective obligations in respect of any goods which have not been delivered by that time.

10. PACKING

(a) Where specified in the Seller's sales literature the cost of the Goods will include the cost of packaging. Such packaging shall be non-returnable and suitable for the protection of the Goods under normal transport conditions and for dry indoor storage in temperate climates for up to 3 months from the date of such delivery provided that the packaging is not damaged or disturbed. (b) All other goods will (unless otherwise agreed in Writing) be delivered by the Seller without packaging. Where the Seller so agrees the packaging will be as agreed and if not specified will be non-returnable and suitable for the protection of the Goods under normal transport conditions and for dry indoor storage in temperate climates for up to 3 months from the date of such delivery provided that the packaging is not damaged or disturbed. The Seller shall be entitled to make an additional charge as agreed with the Buyer or (if no charge has been agreed) a reasonable charge for packaging. The additional charge will be payable by the Buyer at the same time and on the same terms as the price of the Goods.

11. TRADE NAMES AND TRADE TERMS

(a) The Buyer undertakes not to hold himself out in any circumstances or in any manner whatsoever as having authority to sell, service, maintain or deal with the Goods as agent or dealer or other authorised representative of the Seller. (b) In particular and without prejudice to the provisions of sub-clause (a) the Buyer undertakes not to use or reproduce any trade name or registered trade mark of the Seller on goods, premises, vehicles, letter headings and other stationery, sales literature or in any way whatsoever and not to do or authorise to be done any infringing act to which the Trade Marks Act 1994 applies. (c) The Buyer's undertakings under this Clause are conditions of this Contract so that any breach thereof shall entitle the Seller to terminate the Contract and to recover damages in respect of all loss, damage and expense occasioned thereby. The Seller at its option shall be entitled to recover the profit made by the Buyer during the period of the breach from sales, servicing, maintenance and other dealings with goods manufactured by the Seller. (d) Notwithstanding the terms of the Conditions no document purporting to authorise the Buyer to do any act which would otherwise be a breach of the Buyer's undertakings under this Clause or purporting to consent thereto on behalf of the Seller shall be binding on the Seller unless it is a formal licence agreement bearing the Seller's corporate seal.

12. DRAWINGS, PRINTS AND SPECIFICATIONS

(a) Any technical drawings, prints and specifications supplied by the Seller under or in connection with a quotation or the Contract shall remain the property of the Seller who shall reserve the copyright, design right and any registered design right therein. The Buyer shall not copy them or communicate their contents to any third party without the Seller's consent (which consent shall not be unreasonably withheld) and shall comply with the Seller's reasonable requirements as to their use, return and otherwise. (b) The property in the design of the Goods shall (subject to any existing rights of any third party or the Buyer in any design or invention incorporated or used in the design of Goods) remain the exclusive property of the Seller and neither the buyer not any agent contractor or other person authorised by the Buyer nor any other person, firm or company shall at any time make use of the design or any part thereof. (c) The Seller gives no warranty or indemnity in respect of any actual or alleged infringement of any patents, registered designs, design copyright, or any other industrial property right relating to the Goods.

13. DESCRIPTION OF GOODS

(a) Illustrations, photographs, descriptions (including descriptions relating to technical performance, capacity, output, consumption and dimensions) and general literature relating to the Goods are intended as a general guide only and such material shall not form part of the Contract. The Goods will not necessarily correspond in all respects with the goods shown in those illustrations and photographs or such descriptions or general literature. Without limitation the Seller reserves the right to make without notice to the Buyer any improvement or alteration in the material, specification, dimensions or design of the Goods which it thinks reasonable or desirable or which it is required to make by law and such improvement or alteration shall be deemed to have been accepted by the Buyer and the Seller as a variation to the Contract. (b) The Seller can provide goods which are suitable to meet the Buyer's purpose or which will meet specified technical performance provided that the Buyer provides written details of its requirements and obtains the Seller's advice (as to which goods will be suitable) in Writing. Unless the Seller has agreed in Writing to provide equipment for a specified purpose or of a specified technical performance the Buyer shall be deemed to have selected the Goods without having made its purpose or requirements known to the Seller.

14 WARRANTY

(a) Subject to clause 16 the Seller warrants to the Buyer that as from the date of supply and for a period of twenty four months from date of dispatch (as to which the Seller's determination is final) the Seller will free of charge replace or repair any part or parts thereof proved to the Seller's satisfaction to be defective owing to faults in workmanship of the Seller or materials comprised in the Goods. All labour, travel and carriage costs involved in effecting such replacements or repairs will be borne by the Buyer. (b) If the Buyer requires a warranty greater than that set out above any such warranty to be effective must be in writing and signed by either the Secretary or a Director of the Seller and shall in any event be limited to the amount that the Seller can recover under the product liability insurance policies held by the Seller at the date of the Contract. (b) If the Buyer requires a warranty greater than that set out above any such warranty to be effective must be in writing and signed by either the Secretary or a Director of the Seller and shall in any event be limited to the amount that the Seller can recover under the product liability insurance policies held by the Seller at the date of the Contract. (c) Save as expressed in this Clause the Seller shall be under no liability for any personal consequential or other loss or damage of whatsoever kind or howsoever caused as a result of any goods supplied or work done being defective or not in accordance with any order or as a result of anything done or omitted in connection with any work done or omitted to be done by the Seller including any breach by the Seller of any fundamental term of any order and the Seller's liability under this Clause shall be in lieu of and to the exclusion of any liability, condition, guarantee, warranty, term undertaking or representation whether express or implied, statutory or otherwise and shall in any event be limited to the value of the Goods to which any claim relates or the amount received by the Seller in relation to the Goods under any product liability insurance held by the Seller at the date of the Contract. (d) Nothing contained in the Clause shall exclude:-

(i) any liability for breach of the Seller's implied undertakings as to title

(ii) where the Buyer deals as a consumer (as defined by the Unfair Contract Terms Act 1977) any liability for breach of the Seller's implied undertakings as to conformity of goods with description or sample or as to their quality or fitness for a particular purpose.

(iii) any liability arising from the Seller's negligence causing death or personal injury.

15. EXCLUSIONS

The Warranty shall not apply to:-

(a) Any defect which in the opinion of the Seller arises by reason of misuse, misapplication, neglect or accident occurring after risk has passed to the Buyer. (b) Any defect not notified to the Seller or its authorised distributors or dealers within 3 working days of the Buyer having become aware of such defect. (c) Any equipment which shall in the opinion of the Seller have been improperly installed, serviced, repaired or altered (other than by the Seller) or in or to which any part not manufactured or sold by the Seller has been fitted. (d) Goods not of the Seller's manufacture in which case the Buyer is entitled only to such benefit as the Seller may receive under any warranty given in respect thereof. (e) Any equipment on which service has been carried out by anyone other than the Seller or any approved service agent. (f) Any equipment installed or situated outside Great Britain, Isle of Man, Northern Ireland, Eire and the Channel Islands without the Seller's consent in Writing.

16. TERMINATION OF THE CONTRACT

If the Buyer becomes insolvent or goes into bankruptcy, receivership, administration or liquidation or enters into any voluntary arrangement with its creditors or commits a breach of the Contract or any other contract with the Seller or has any process of distress or execution levied upon its goods or the Seller reasonably considers that any of the above events is likely to occur then the Seller may forthwith on written notice to the Buyer terminate the Contract without incurring any liability to the Buyer and without prejudice to the Seller's right to recover the Price and / or damages for any breach of the Contract by the Buyer.

17. MISCELLANEOUS

(a) The Contract is between the Seller and the Buyer as principals and is not assignable without the Seller's consent.

(b) Each of the Clauses and sub-clauses of the Conditions shall be construed as separate and severable.

(c) None of the provisions of any of the clauses or sub-clauses of the Conditions shall in any way limit any of the other clauses or sub-clauses of the Conditions. (d) The law governing the Contract shall be the law of England. Any disputes arising out of or in connection with the Contract shall be submitted to the jurisdiction of the English Courts, except that the Seller may elect and be entitled to proceed in Scotland or Northern Ireland or any foreign jurisdiction wherever proceedings may lawfully be brought against the Buyer. (e) The Buyer recognises that the Conditions and (without limitation) the limitations of liability contained in the Conditions are reasonable in that the prices quoted by the Seller are dependent upon such limitations being incorporated in the Contract and because greater liability can be accepted if expressly agreed in Writing in accordance with the Conditions. (f) Any notice may be served by either party on the other by leaving it at or sending it by post or facsimile to the address of the party contained in the Contract. Such notice shall be deemed to be served if by hand when delivered if by facsimile when sent and if by first class post two working days after posting.

GEA Searle - Warranty Procedure

For products and services supplied directly by GEA Searle or Dawmec, you should follow the procedure outlined below. For products supplied via a wholesaler, distributor or agent, your warranty agreement is with them and therefore you should supply the same information as outlined below to your contact.

Warranty Procedure

This warranty applies to all units detailed in this list price and, unless otherwise stated in product literature or specific contracts, provides for a manufacturer's guarantee of twenty four months from date of dispatch against faults in workmanship or materials.

When submitting a warranty claim, a claim number will be supplied. Please give the following information in order to process your claim quickly and efficiently:

- Customer's original reference number job / order number.
- GEA Searle's job number / advice note number.
- Type of unit and serial number.
- Date of installation.
- Details of defect.

when providing details of the defect, please give as much information as possible, ie.

- Was the unit satisfactory on delivery?
- Frequency of fault (continuous / intermittent)
- Is the unit leaking ? (+ location of leak)
- Items manufactured by GEA Searle :

No work should be undertaken to resolve the problem either by the customer or a 3rd party until approved by Searle – failure to do so could invalidate the warranty.

The item may be replaced or rectified if the guarantee claim is valid.
For items that have been installed, GEA Searle have the right to decide if rectification on site is suitable and who should undertake the work or whether to return / replace the unit(s). For items where GEA Searle decides to replace, the original faulty item must be returned. All items which are returned will be inspected.

If the guarantee claim is not valid the customer will be advised and further instructions requested, either to return the item or to issue an official order to replace or rectify the item.

If you require a replacement product the buyer will be asked to supply a purchase order, when the unit has been returned and evaluated, the buyer will be notified by GEA Searle if the claim is valid.

Items NOT manufactured by GEA Searle:

- The item will be replaced and the customer will be invoiced
- The item will be returned to the supplier for evaluation.
- If the claim is valid the credit received from the supplier will be passed on to the customer.

Items supplied by Dawmec

- The item will be replaced and the customer will be invoiced
- The item will be returned to the supplier for evaluation.
- If the claim is valid the credit received from the supplier will be passed on to the customer.

We live our values.

Excellence • Passion • Integrity • Responsibility • GEA-versity

GEA Group is a global engineering company with multi-billion euro sales and operations in more than 50 countries. Founded in 1881, the company is one of the largest providers of innovative equipment and process technology. GEA Group is listed in the STOXX® Europe 600 Index.

GEA Heat Exchangers

GEA Searle

20 Davis way, Newgate Lane, Fareham, Hants, PO14 1AR
Phone: +44 (O) 1329 823344, Fax: +44 (0) 1329 821242
searle.hx.uk@gea.com, www.gea-heatexchangers.com

© GEA Group AG. All rights reserved. Cooler brochure Issue 4 March 2014 273-103-651