CHANGING
GEA HEAT EXCHANGERS

www.brand-change.com



Goedhart LLK.p

Ceiling mounted industrial air coolers
Cu/Al - StSt/Al - StSt/StSt - FeZn

Customized

The visible and invisible quality

1 Coil, The heart of a Heat Exchanger

Robust and reliable, excellent performance through a combination of quality materials, craft manship and experienced engineering.

Coil configuration and materials:

LLK air coolers are availble with all the Goedhart tube confuations and materials:

- Copper tubes / Aluminium fins
- Stainless steel tubes / Aluminium fins
- Stainless steel tubes / Stainless steel tubes
- Steel hot dipped galvanized tubes and fins
- On request Aluminium tubes and fins

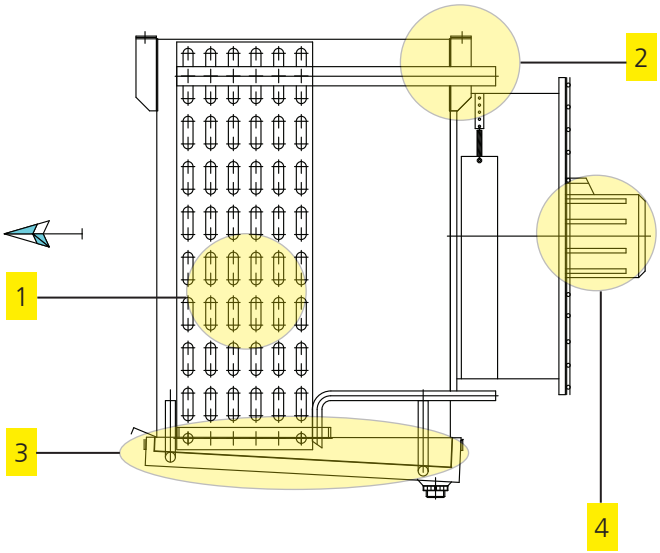

2 Construction, durable and clever

Different casing materials are used for a robust construction.
The following casing materials are available:

- galvanized sheet steel
- galvanized sheet steel with a white finishing
- stainless steel
- aluminium

The flush mounting protects against and prevents accumulation of
dust and dirt.

3 Drip tray

An extra wide drip tray to collect all condensation water from the side end plates of the coil. The drip tray has a hinged construction, easy to clean and maintain the air cooler.

The aluminium inner tray provided with special profiles for optimal conductivity for a hotgas coil or electrical heating elements.

Options for the drip tray are insulation in the galvanized steel outer tray to prevent condensation at the outside of the drip tray of a hygienic polyester drip tray to prevent condensation and is easy to clean.

4 Fans

Different suppliers of fans give you a wide choice of fan options
Axiale flow fans are angled up, which means:
condensed water will flow back in de drip tray of the air cooler
less danger of freezing of the impeller
longer air throw for draw-through air coolers

Optional fan heating elements prevent freezing of the impeller in low temperature applications

Applications

The customized LLK.p air coolers are used in a wide range of industrial applications:

- Distribution centres
- Holding rooms
- Automotive testing rooms
- Cold stores
- Processing areas
- Leisure (ski-domes)

Examples

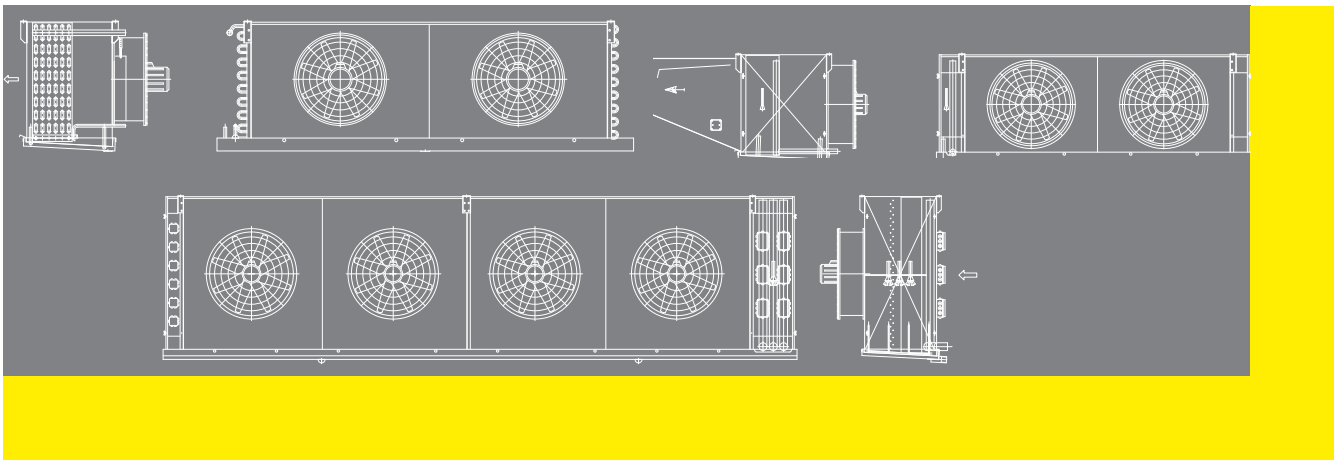

LLK.p , industrial customized air coolers









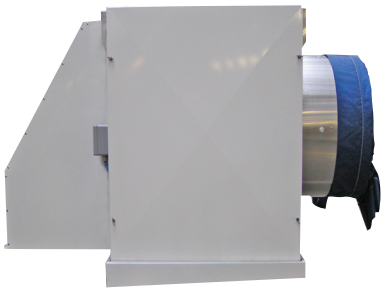

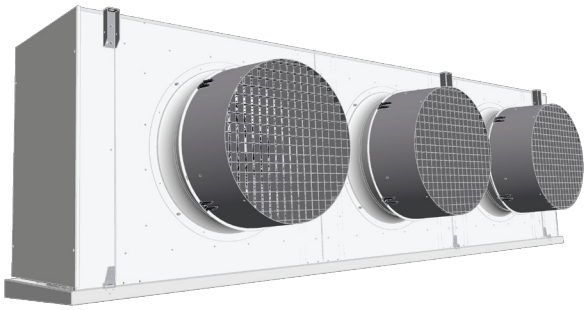

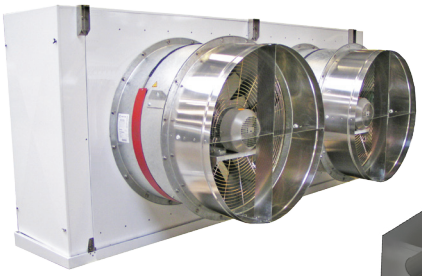

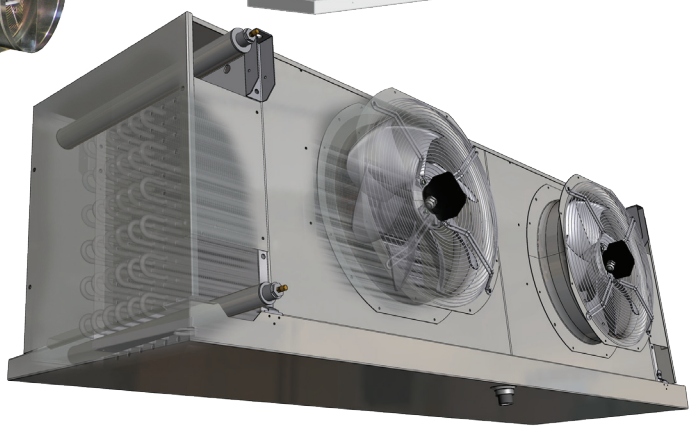

CHANGING
GEA HEAT EXCHANGERS

GEA Goedhart B.V.

Nijverheidsweg 6, 4695 RC Sint Maartensdijk
The Netherlands
Phone +31 (0)166 665 665, Fax+31 (0)166 663 698
www.brand-change.com/www.goedhart.eu / www.goedhart.nl,
info.goedhart.nl@gea.com

GEA Heat Exchangers s.a. / GEA Goedhart systems

Kostomlátecká 180, 288 26 Nymburk
Czech Republic
Phone +420 325 519 951, Fax+420 325 519 952
www.brand-change.com / www.goedhart.cz,
goedhart.cz@gea.com

© GEA Group AG. All rights reserved
Version: 08.04.2.008.dok - 2011-12. Subject to modification.