CHANGING
GEA HEAT EXCHANGERS

Mounting Guide

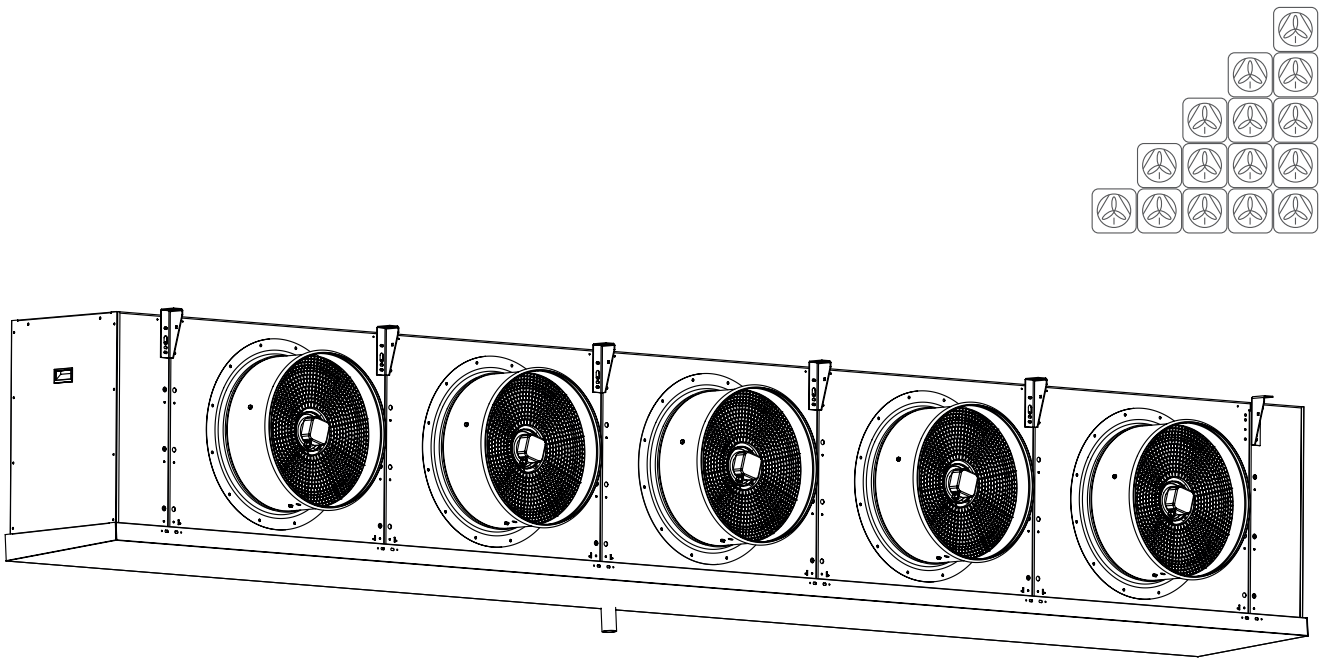

Küba SG *industrial*

IMPORTANT: These assembly instructions comprise 2 separate documents.

Mounting Guide

Page 2-5

- Dimensions
- Weights
- Assembly
- Motor

1/2

Electrical defrosting

See supplementary sheet

- Arrangement of the heating circuits
- Cabling
- Electrical defrosting wiring diagram

2/2

SG industrial

Dimensions

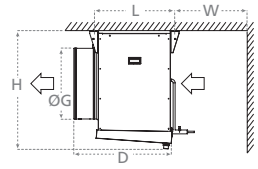

Type	H ±5	W ±5	D ±5	Ø G
SGA, SGB SGK, SGL	mm	mm	mm	mm
50 A	718	1620	906	517
56 A	918	1620	906	563
63 A	1018	1820	931	636
71 A	1318	2020	1069	733
80 A	1518	2020	1159	803
50 A	718	2620	906	517
56 A	918	2620	906	563
63 A	1018	3020	931	636
71 A	1318	3420	1069	733
80 A	1518	3420	1159	803
50 A	718	3620	906	517
56 A	918	3620	906	563
63 A	1018	4220	931	636
71 A	1318	4820	1069	733
80 A	1518	4820	1159	803
50 A	718	4620	906	517
56 A	918	4620	906	563
63 A	1018	5420	931	636
71 A	1318	6220	1069	733
80 A	1518	6220	1159	803
50 A	718	5620	906	517
56 A	918	5620	906	563
63 A	1018	6620	931	636
–	–	–	–	–
–	–	–	–	–

Weights

	SGA		SGB		SGK		SGL		SGA		SGB		SGK		SGL	
	kg		kg		kg		kg		kg		kg		kg		kg	
	net	gross	net	gross	net	gross	net	gross	net	gross	net	gross	net	gross	net	gross
50-4. (4-x piped)	129		121		118		116		213		198		192		188	
50-6. (6x piped)	145		133		129		126		146		222		215		209	
56-4. (4-x piped)	162		151		148		145		267		246		239		234	
56-6. (6-x piped)	184		163		163		162		312		281		270		267	
56-8. (8-x piped)	213		191		191		179		362		320		306		295	
63-4. (4-x piped)	204		190		190		181		346		318		308		301	
63-6. (6-x piped)	235		214		214		202		409		366		352		341	
63-8. (8-x piped)	268		240		240		224		472		415		397		383	
71-4. (4-x piped)	284		262		262		249		484		439		425		414	
71-6. (6-x piped)	332		299		299		279		582		514		692		476	
71-8. (8-x piped)	385		341		341		315		678		590		560		538	
80-4. (4-x piped)	350		307		307		293		608		521		505		493	
80-6. (6-x piped)	390		351		351		329		685		606		582		563	
80-8. (8-x piped)	450		398		398		368		800		694		662		636	

Dimensions

Type	L ±5	W	W_{min}	W*	E1 ±5	E2 ±5	E3 ±5	E4 ±5	E5 ±5
SGA, SGB SGK, SGL	mm	mm	mm	mm	mm	mm	mm	mm	mm
50 A	704	500	860	1620	1054	–	–	–	–
56 A	704	550	860	1620	1054	–	–	–	–
63 A	729	600	960	1820	1254	–	–	–	–
71 A	757	700	1340	2020	1454	–	–	–	–
80 A	757	800	1340	2020	1454	–	–	–	–
50 A	704	500	860	2620	2054	1000	–	–	–
56 A	704	550	860	2620	2054	1000	–	–	–
63 A	729	600	960	3020	2454	1200	–	–	–
71 A	757	700	1340	3420	2854	1400	–	–	–
80 A	757	800	1340	3420	2854	1400	–	–	–
50 A	704	500	860	3620	3054	1000	2000	–	–
56 A	704	550	860	3620	3054	1000	2000	–	–
63 A	729	600	960	4220	3654	1200	2400	–	–
71 A	757	700	1340	4820	4254	1400	2800	–	–
80 A	757	800	1340	4820	4254	1400	2800	–	–
50 A	704	500	860	4620	4054	1000	2000	3000	–
56 A	704	550	860	4620	4054	1000	2000	3000	–
63 A	729	600	960	5420	4854	1200	2400	3600	–
71 A	757	700	1340	6220	5654	1400	2800	4200	–
80 A	757	800	1340	6220	5654	1400	2800	4200	–
50 A	704	500	860	5620	5054	1000	2000	3000	4000
56 A	704	550	860	5620	5054	1000	2000	3000	4000
63 A	729	600	960	6620	6054	1200	2400	3600	4800
–	–	–	–	–	–	–	–	–	–
–	–	–	–	–	–	–	–	–	–

Weights

SGA		SGB		SGK		SGL		SGA		SGB		SGK		SGL		SGA		SGB		SGK		SGL	
kg		kg		kg		kg		kg		kg		kg		kg		kg		kg		kg		kg	
net	gross	net	gross	net	gross	net	gross	net	gross	net	gross	net	gross	net	gross	net	gross	net	gross	net	gross	net	gross
301		277		269		263		374		342		332		324		473		433		421		411	
351		316		305		296		440		392		377		365		558		500		480		465	
376		344		334		326		469		427		413		403		593		540		523		510	
445		398		382		378		559		496		475		469		707		628		602		594	
518		453		432		416		647		563		534		514		826		720		685		659	
489		446		489		421		632		575		556		542		773		702		678		661	
582		516		582		480		754		669		641		620		925		818		783		757	
678		593		678		543		882		767		730		702		1084		941		894		859	
702		635		699		597		893		804		775		753		–	–	–	–	–	–	–	–
845		744		708		686		1082		947		903		870		–	–	–	–	–	–	–	–
997		864		995		788		1278		1099		1041		997		–	–	–	–	–	–	–	–
884		753		730		710		1130		956		924		898		–	–	–	–	–	–	–	–
997		878		842		813		1277		1119		1071		1032		–	–	–	–	–	–	–	–
1177		1019		970		932		1510		1298		1233		1182		–	–	–	–	–	–	–	–

Assembly

1

1.1 → **1.2** → **1.3** → **1.4**

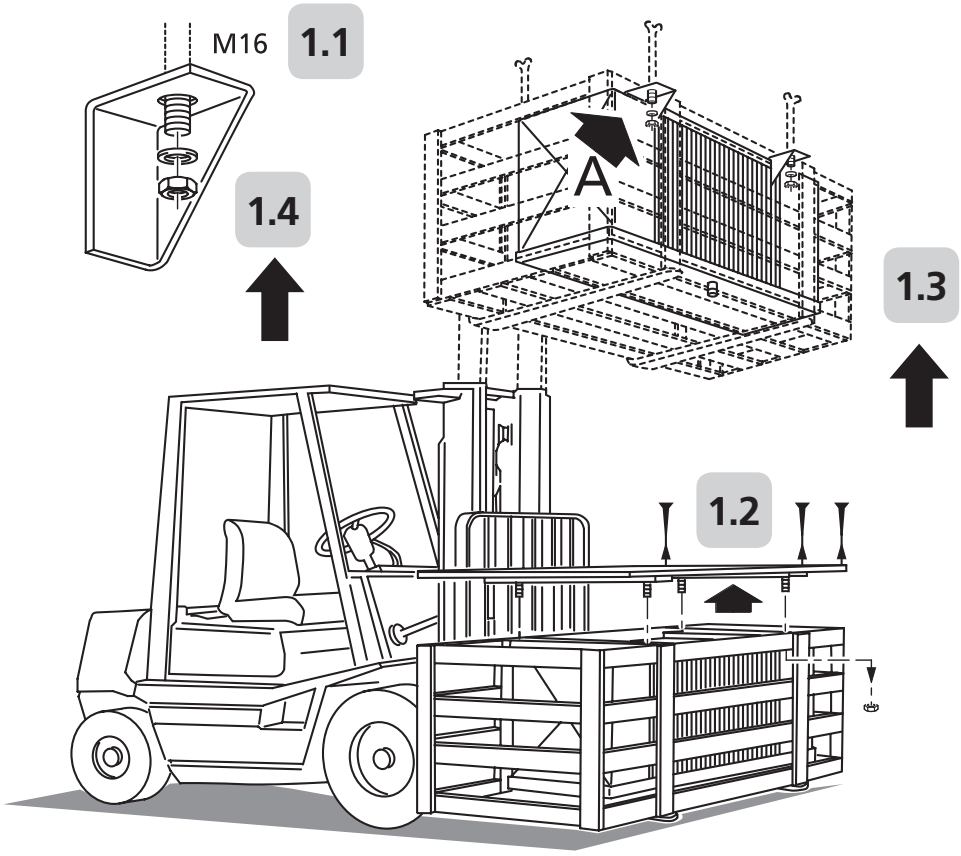

2

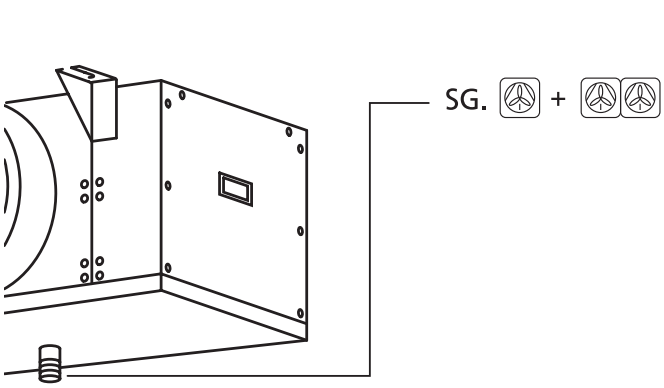

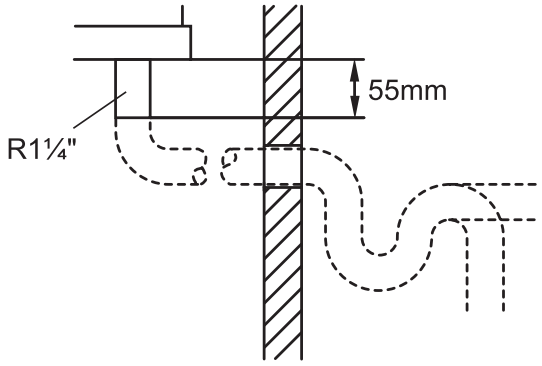

G1¼	G1¼	G2	G2	G2

Assembly

3
3.1
3.2
3.3
3.4
3.5
3.6
3.7

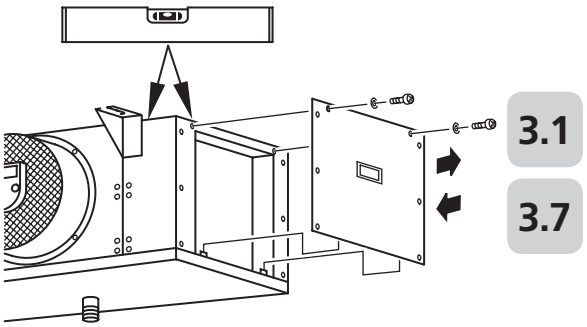

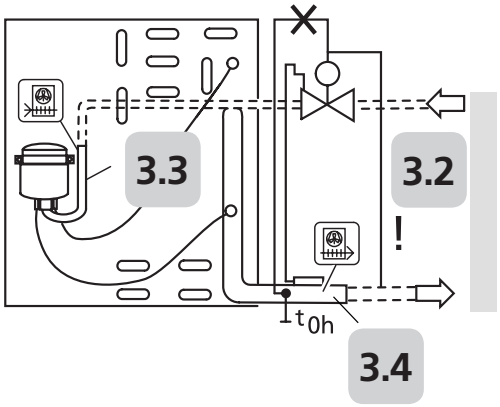

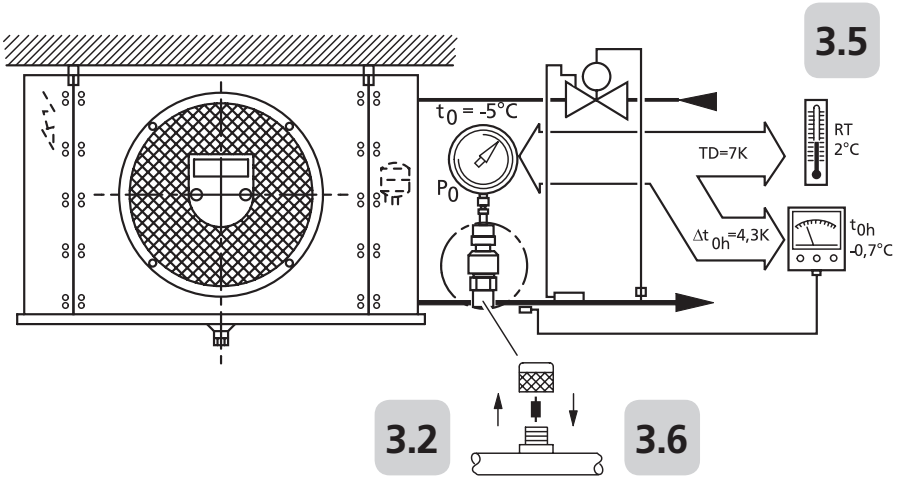

$\Delta t_{0h} \cong 0.5 \ldots 0.7 \times TD$

TD 10K ≅ Δt_{0h} 6.1 K
TD 9K ≅ Δt_{0h} 5.5K
TD 8K ≅ Δt_{0h} 4.9K
TD 7K ≅ Δt_{0h} 4.3K
TD 6K ≅ Δt_{0h} 3.7K
TD 5K ≅ Δt_{0h} 3.1K
TD 4K ≅ Δt_{0h} 2.5K

SGA (E) SGB (E) SGK (E) SGL (E)	mm	mm
50-F41 A	10	28
50-F61 A	10	28
56-F41 A	10	28
56-F61 A	15	35
56-F81 A	15	35
63-F41 A	15	28
63-F61 A	22	35
63-F81 A	22	35
71-F41 A	15	35
71-F61 A	22	35
71-F81 A	22	42
80-F41 A	15	42
80-F61 A	22	42
80-F81 A	22	42

SGA (E) SGB (E) SGK (E) SGL (E)	mm	mm
50-F42 A	15	35
50-F62 A	15	35
56-F42 A	15	35
56-F62 A	22	42
56-F82 A	22	42
63-F42 A	22	42
63-F62 A	22	42
63-F82 A	22	42
71-F42 A	22	42
71-F62 A	22	54
71-F82 A	22	54
80-F42 A	22	54
80-F62 A	2 x 22	2 x 42
80-F82 A	2 x 22	2 x 42

SGA (E) SGB (E) SGK (E) SGL (E)	mm	mm
50-F43 A	15	42
50-F63 A	22	42
56-F43 A	15	42
56-F63 A	22	42
56-F83 A	22	54
63-F43 A	22	42
63-F63 A	22	54
63-F83 A	22	54
71-F43 A	22	54
71-F63 A	2 x 22	2 x 42
71-F83 A	2 x 22	2 x 42
80-F43 A	22	54
80-F63 A	2 x 22	2 x 54
80-F83 A	2 x 22	2 x 54

SGA (E) SGB (E) SGK (E) SGL (E)	mm	mm
50-F44 A	15	42
50-F64 A	22	54
56-F44 A	22	54
56-F64 A	22	54
56-F84 A	2 x 22	2 x 42
63-F44 A	22	54
63-F64 A	22	54
63-F84 A	2 x 22	2 x 42
71-F44 A	22	54
71-F64 A	2 x 22	2 x 54
71-F84 A	2 x 22	2 x 54
80-F44 A	22	64
80-F64 A	2 x 22	2 x 54
80-F84 A	2 x 22	2 x 54

SGA (E) SGB (E) SGK (E) SGL (E)	mm	mm
50-F45 A	22	54
50-F65 A	22	54
56-F45 A	22	54
56-F65 A	22	54
56-F85 A	2 x 22	2 x 42
63-F45 A	22	54
63-F65 A	22	54
63-F85 A	2 x 22	2 x 54

Electrical wiring (motor)

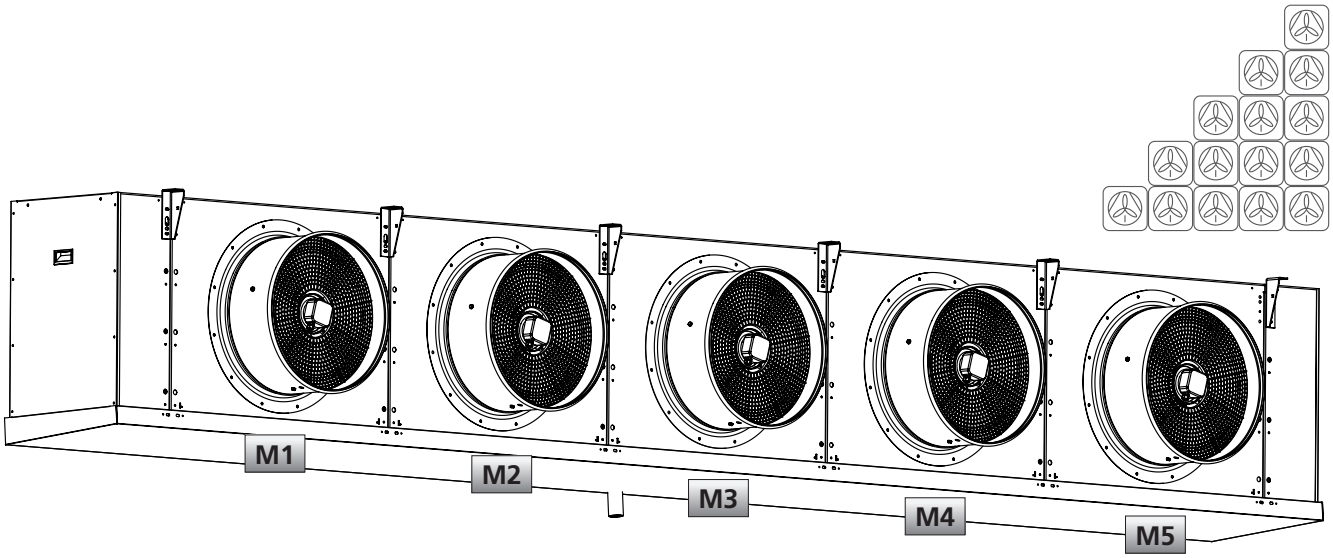

Küba SG *industrial*

Motor

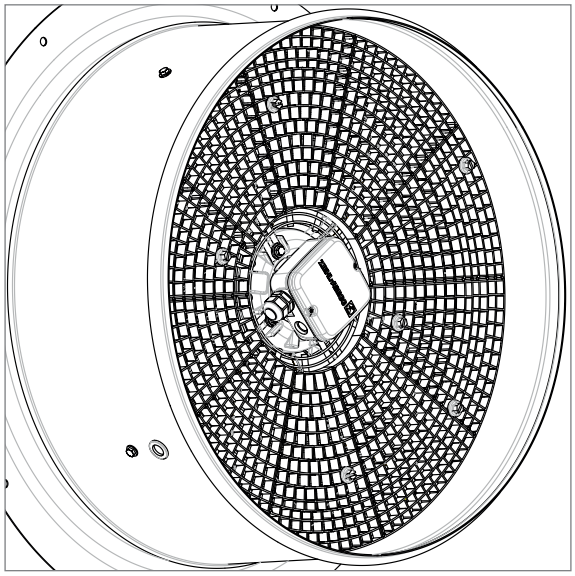

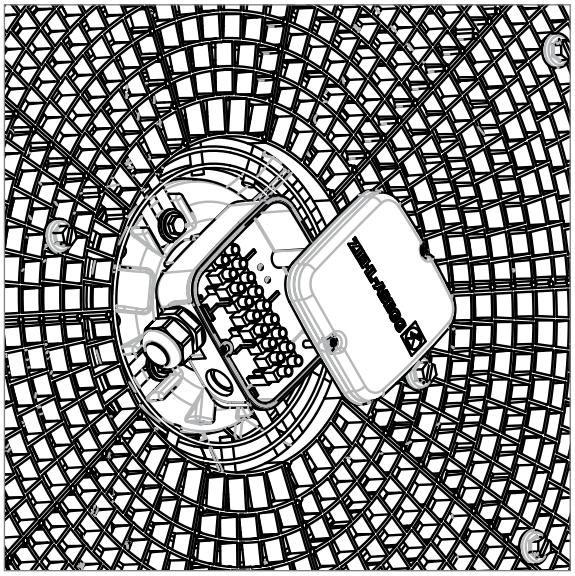

SG industrial

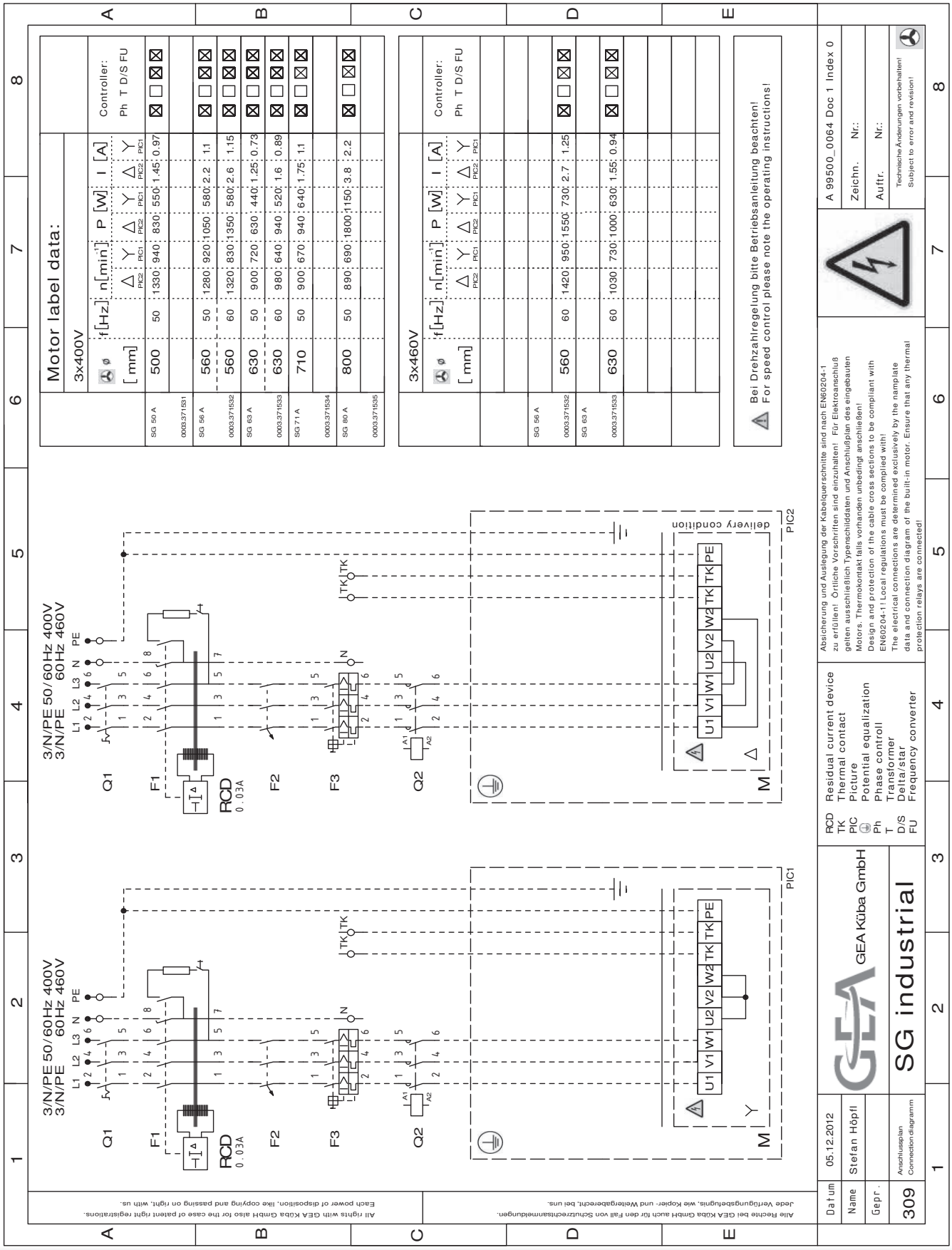
Motor label data:
3x400V
3x460V
Controller:
Ph T D/S FU
Bei Drehzahlregelung bitte Betriebsanleitung beachten!
For speed control please note the operating instructions!
3/N/PE 50/60Hz 400V
3/N/PE 60Hz 460V
Q1
F1
RCD
0..03A
F2
F3
Q2
M
delivery condition
PIC1
PIC2
Residual current device
Thermal contact
Picture
Potential equalization
Phase controll
Transformer
Delta/star
Frequency converter
GEA Küba GmbH
SG industrial
Stefan Höpfl
05.12.2012
Anschlussplan
Connection diagramm
309
A 99500_0064 Doc 1 Index 0
Technische Änderungen vorbehalten!
Subject to error and revision!

GEA Küba GmbH

Kühler Weg 1 · 82065 Baierbrunn · Germany
Tel.: +49 89/744 73-0 · Fax: +49 89/744 73-107
kueba@gea.com · www.kueba.com

© Copyright 2013 Küba GmbH · 0001.392160.1 · Status 05/2013
Technical modifications reserved