CHANGING
GEA HEAT EXCHANGERS

www.brand-change.com



Goedhart AU.s

Air coolers for slaughter houses
Cu/Al - StSt/Al - StSt/StSt - FeZn

Customized

The visible and invisible quality

1 Coil, The heart of a Heat Exchanger

Robust and reliable, excellent performance through a combination of quality materials, craft manship and experienced engineering.

Coil configuration and materials:

AU.s air coolers are availble with all the Goedhart tube confuations and materials:

- Copper tubes / Aluminium fins
- Stainless steel tubes / Aluminium fins
- Stainless steel tubes / Stainless steel tubes
- Steel hot dipped galvanized tubes and fins
- On request Aluminium tubes and fins

2 Construction, durable and clever

Different casing materials are used for a robust construction.
The following casing materials are available:

- galvanized sheet steel
- galvanized sheet steel with a white finishing
- stainless steel
- aluminium

The space between the coil block and the leg keep cold brigging to a minium.
Legs to fix the air cooler on the floor or to the ceiling.

3 Drip tray

An extra wide drip tray to collect all condensation water from the side end plates of the coil.

The aluminium inner tray provided with special profiles for optimal conductivity for a hotgas coil or electrical heating elements.

Options for the drip tray are insulation in the galvanized steel outer tray to prevent condensation at the outside of the drip tray of a hygienic polyester drip tray to prevent condensation and is easy to clean.

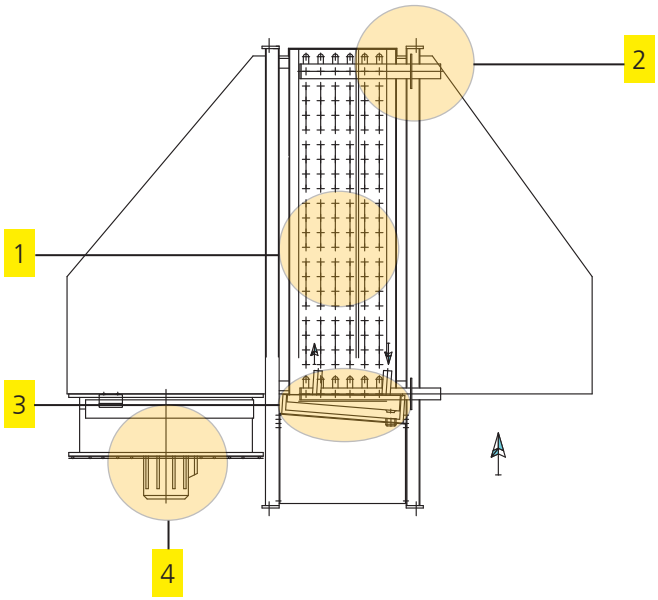

4 Fans

Different suppliers of fans give you a wide choice of fan options
Axiale flow fans are angled up, which means:
condensed water will flow back in de drip tray of the air cooler
less danger of freezing of the impeller
longer air throw for draw-through air coolers

Optional fan heating elements prevent freezing of the impeller in low temperature applications

Applications

The AU.s air coolers are used in a wide range of industrial applications:

- Blast freezers
- Slaughter houses for red and white meat
- Cold-sea

Examples

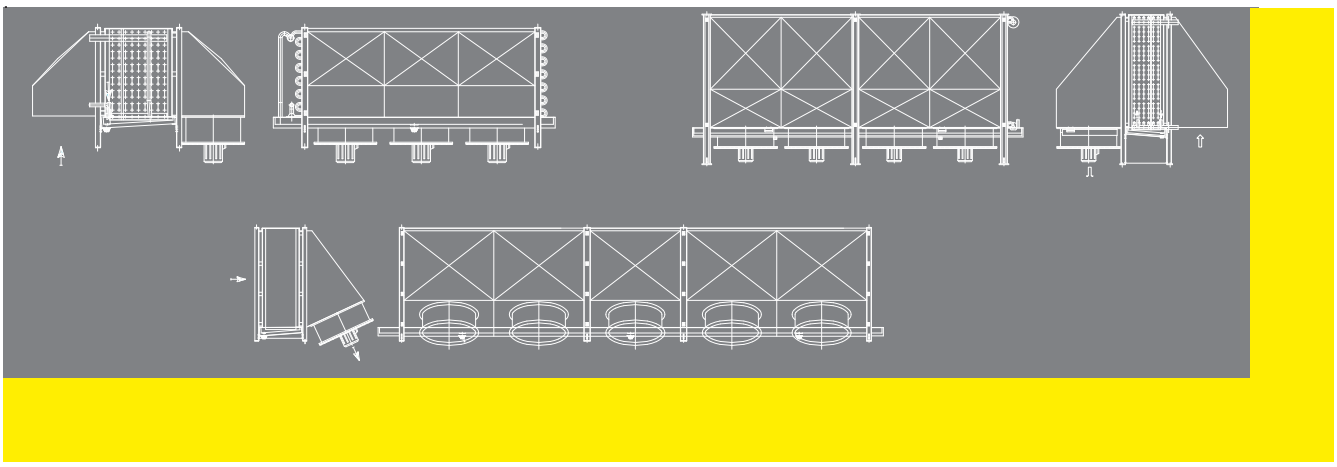

AU.s , industrial customized air coolers



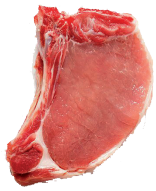



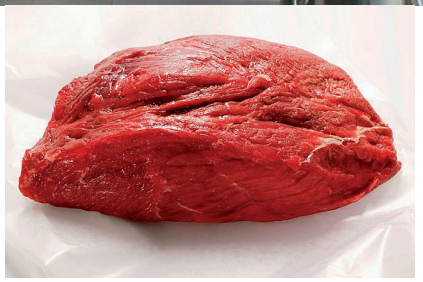





CHANGING
GEA HEAT EXCHANGERS

GEA Goedhart B.V.

Nijverheidsweg 6, 4695 RC Sint Maartensdijk
The Netherlands
Phone +31 (0)166 665 665, Fax+31 (0)166 663 698
www.brand-change.com/www.goedhart.eu / www.goedhart.nl,
info.goedhart.nl@gea.com

GEA Heat Exchangers s.a. / GEA Goedhart systems

Kostomlátecká 180, 288 26 Nymburk
Czech Republic
Phone +420 325 519 951, Fax+420 325 519 952
www.brand-change.com / www.goedhart.cz,
goedhart.cz@gea.com

© GEA Group AG. All rights reserved
Version: 08.05.2.007.dok - 2011-12. Subject to modification.