CHANGING
GEA HEAT EXCHANGERS



Küba DZ *production*

Optimal space utilisation combined with perfectly distributed cooling

Küba DZ *production*

Ceiling mounted air cooler for large production and working areas







Optimal utilisation of space



Standard version has drip tray hinging down

Type designation code

1	2	3	4		5	6	7
DZ	B	E	50	-	F	6	4

Refrigerant (Box 5)

F	HFC / CO_2	**G**	Glycol	**N**	Pump operation, NH_3

1. Model range designation
2. Fin spacing
3. Electric defrost
4. Fan diameter
5. Refrigerant
6. Number of rows deep
7. Number of fans

Küba DZ *production*



Capacity range (for SC2)

3.4 kW 74 kW

Temperature range (t_{L1})

-35°C 0°C +20°C

Number of fans

to

Content

Application benefits for contractors and operators 4
Basic version 6
Technical data – DZA(E) 8
Technical data – DZB(E) 9
Technical data – DZK(E) 10
Weights, electric defrost 11
Dimensions, drain 12
Variants 14
Accessories 15

Applications

- Large production and working areas
- Normal and deep freezing
- Complex cooling applications

Küba DZ *production*

Application benefits for contractors and operators

Our Küba DZ *production* discharges air on two sides – the ideal solution for large production and working areas such as slaughterhouses and dairies. The unit is also suited for keeping sensitive flowers cool.

The flat, ceiling mounted design ensures optimal utilisation of space and perfect distribution of cool air in normal cooling as well as large deep freeze warehouses.

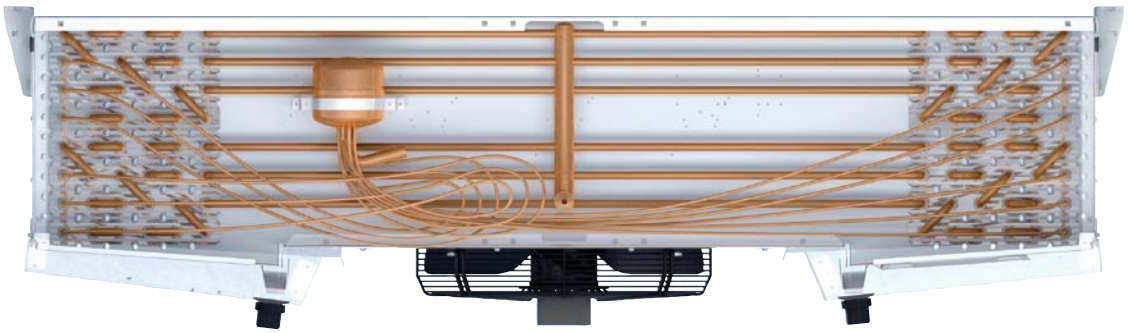

Küba DZ *production*

from the Küba Blue Line production range

Hygiene ensured

The standard design already includes a hinged drip tray. This renders cleaning simple and the unit is easy to dismount for servicing.

The suspension brackets of the series are also designed for the air cooler to be mounted on the ceiling as follows:

- With a clearance of 20 mm to the ceiling for deep freeze applications, to ensure an insulating air cushion
- Flush against the ceiling for hygiene areas

The spacing may be adjusted on site, simply by adjusting the suspension brackets. The standard spacing to the ceiling is 20 mm. This may also be specified as 3 mm with the order.

To meet the stringent hygiene requirements, the Küba DZ production is quick and easy to clean, thanks to its optionally hinged fans.





Excellent air-flow control

Air is discharged evenly on both sides of the air cooler. When mounted in the centre of the room or between suspension rails, the unit provides air circulation on both sides, resulting in a homogeneous room climate and uniform cooling of the products.

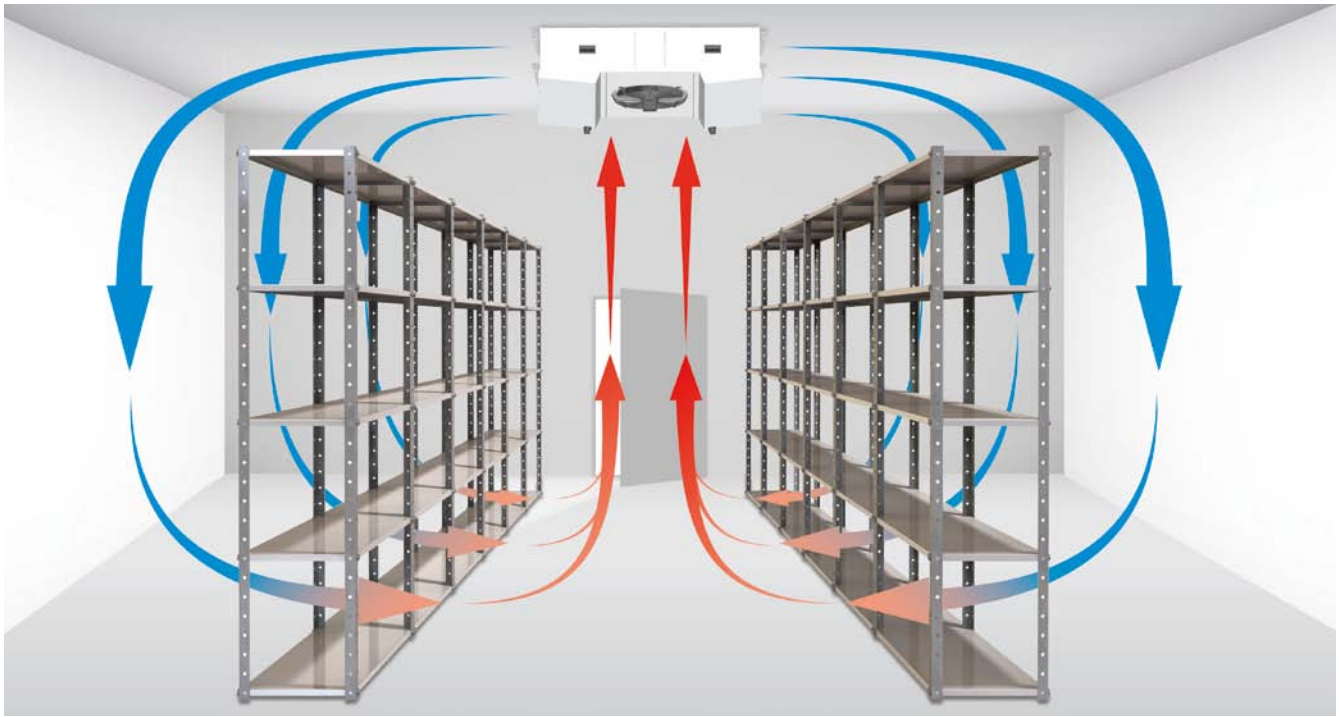

Küba DZ *production*

Basic version



Casing

- Zinc coated steel
- High-grade powder coating RAL 9018 papyrus white
- Food-safe
- Best quality powder coated edges
- Hinged drip tray and removable side panels
- Double drip tray
- Stainless steel mounting material
- Plastic drain up to 1 1/4“ Stainless steel drain from 2“

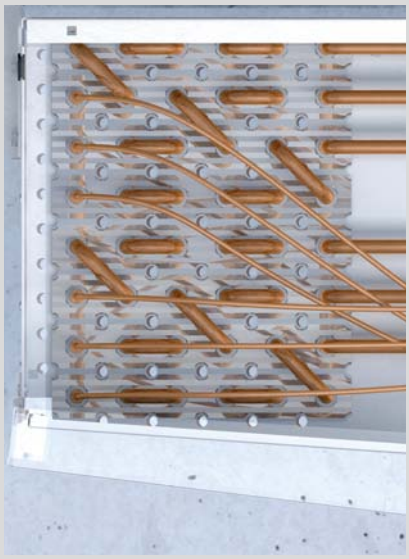

Heat exchanger for direct expansion

- Heat exchanger with aligned tube pattern; internally grooved special copper tubes (drawn oxygen-free), according to DIN EN 12735-1,2; diameter: 15 mm; with closed pure-aluminum HFE® fins
- Fin spacing: A = 4.5 mm | B = 7 mm | K = 10 mm
- Fins flared to form-fit the core tube
- Maximum heat transfer with compact dimensions
- **Series DZ-F: HFC / CO_2** Küba-CAL® refrigerant distributors throughout the entire HFC range *Tubing:* special copper piping with inner fins; *Fins:* Al; *End plates:* Al
- **Series DZ-G: Glycol** Distribution tubes for multiple injections *Tubing:* Cu smooth; *Fins:* Al; *End plates:* Al
- **Series DZ-N: with pump / NH_3** Distribution tubes for multi injections *Tubing:* VA; *Fins:* Al; *End plates:* Al



Electric defrost

- Heaters with CrNi steel sleeve
- Vapour-tight connections
- Mains voltage: 230 V-1/400V-3-Y
- Wired ready to connect in junction boxes
- Optimized tubular heater configurations ensure fast and even defrosting
- Fins flared to form-fit the core tube
- Aluminium heat pipes that ensure excellent heat transfer to the fins and thus effective defrosting cycles with optimized service life.
- Integrated tube bushings allow a subsequent modification to an electric defrost system.



Fans

- Available fan diameter: 400 / 450 / 500 / 560 mm
- Permissible motor ambient temperatures: -40°C to +40°C (DZ56) / +50°C (DZ50) / +55°C (DZ45) / +70°C (DZ40)
- With built-in protector to be wired on site
- 400 ±10% V-3~, 50 Hz
- At maximum speed (Δ operation) the moisture discharge from the fins is minimal
- Protection class: IP54
- Insulation class: F
- Operating data can be found with Küba Select or in the technical data
- Controller:
  - Phase control ☑
  - Transformer ☐
  - Delta/star ☑
  - Frequency converter ☑

Please observe the manufacturer's information!

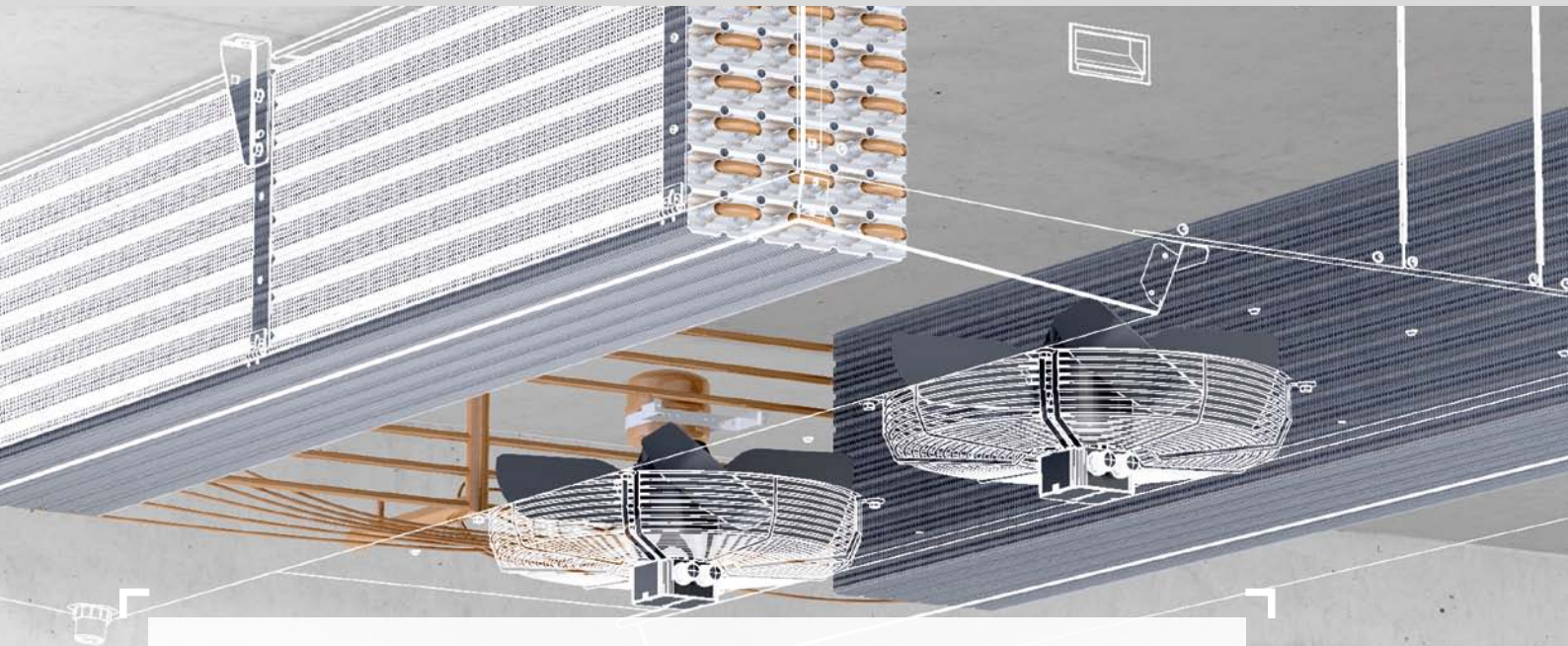

Motor label data*

Type	Ø mm	50 Hz						60 Hz					
		rpm		W		A		rpm		W		A	
		Δ	Y	Δ	Y	Δ	Y	Δ	Y	Δ	Y	Δ	Y
DZ 40 - 41-64	400	1,350	1,050	320	230	0.66	0.38	-	-	-	-	-	-
DZ 45 - 41-64	450	1,330	970	640	430	1.10	0.70	-	-	-	-	-	-
DZ 50 - 41-84	500	1,320	1,030	820	550	1.50	0.95	-	-	-	-	-	-
DZ 56 - 41-84	560	1,360	1,090	845	640	1.65	1.05	-	-	-	-	-	-

Motor data per fan

*Data provided by the manufacturer

Küba DZ *production*

Technical data – DZA (E)

4,5 mm

Type	Rating Q_0 at 50 Hz. DT1. R404A		Cooling surface	Air flow	Air throw *	Tube volume	Connections		Sound	Fans (Operational values at 50 Hz)				
	SC2	SC3					Inlet	Outlet	L_{WA}	Blade	Current	Per Fan		
	kW	kW	m^2	m^3/h	m	dm^3	Ø mm	Ø mm	db (A)	Ø mm	230 ± 10% V-1 50 Hz	rpm	W	A
DZA 40-F41	5.0	4.0	33.0	2,890	2 x 9	5.4	10 x 1.0	28 x 1.5	75	400	400 V-3	1,360	250	0.53
DZA 40-F61	6.3	5.0	49.4	2,720	2 x 9	8.2	10 x 1.0	28 x 1.5	75	400	400 V-3	1,360	250	0.53
DZA 45-F41	7.6	6.1	44.0	4,400	2 x 11	7.2	10 x 1.0	28 x 1.5	79	450	400 V-3	1,390	450	0.98
DZA 45-F61	9.4	7.5	66.0	4,050	2 x 11	10.6	10 x 1.0	28 x 1.5	79	450	400 V-3	1,390	450	0.98
DZA 50-F61	13.4	10.7	109.8	5,400	2 x 14	17.4	10 x 1.0	35 x 1.5	80	500	400 V-3	1,340	690	1.24
DZA 50-F81	15.0	11.9	146.4	5,175	2 x 14	23.2	15 x 1.0	35 x 1.5	80	500	400 V-3	1,340	690	1.24
DZA 56-F61	17.3	13.8	131.8	7,245	2 x 16	20.6	15 x 1.0	35 x 1.5	81	560	400 V-3	1,400	610	1.34
DZA 56-F81	19.4	15.5	176.0	6,975	2 x 16	27.6	15 x 1.0	35 x 1.5	81	560	400 V-3	1,400	610	1.34
DZA 40-F42	10.1	8.0	66.0	5,780	2 x 12	10.8	10 x 1.0	28 x 1.5	78	400	400 V-3	1,360	250	0.53
DZA 40-F62	12.6	10.0	98.8	5,440	2 x 12	16.4	10 x 1.0	35 x 1.5	78	400	400 V-3	1,360	250	0.53
DZA 45-F42	15.2	12.1	88.0	8,800	2 x 14	14.4	10 x 1.0	35 x 1.5	82	450	400 V-3	1,390	450	0.98
DZA 45-F62	18.8	15.0	132.0	8,100	2 x 14	21.2	15 x 1.0	35 x 1.5	82	450	400 V-3	1,390	450	0.98
DZA 50-F62	26.8	21.4	219.6	10,800	2 x 17	34.8	22 x 1.0	35 x 1.5	83	500	400 V-3	1,340	690	1.24
DZA 50-F82	29.9	23.9	292.8	10,350	2 x 17	46.4	22 x 1.0	42 x 1.5	83	500	400 V-3	1,340	690	1.24
DZA 56-F62	34.5	27.6	263.6	14,490	2 x 19	41.2	22 x 1.0	42 x 1.5	84	560	400 V-3	1,400	610	1.34
DZA 56-F82	38.9	31.1	352.0	13,950	2 x 19	55.2	22 x 1.0	42 x 1.5	84	560	400 V-3	1,400	610	1.34
DZA 40-F43	15.1	12.0	99.0	8,670	2 x 15	16.2	10 x 1.0	35 x 1.5	80	400	400 V-3	1,360	250	0.53
DZA 40-F63	18.8	15.0	148.2	8,160	2 x 15	24.6	15 x 1.0	35 x 1.5	80	400	400 V-3	1,360	250	0.53
DZA 45-F43	22.8	18.2	132.0	13,200	2 x 17	21.6	15 x 1.0	35 x 1.5	84	450	400 V-3	1,390	450	0.98
DZA 45-F63	28.2	22.5	198.0	12,150	2 x 17	31.8	22 x 1.0	42 x 1.5	84	450	400 V-3	1,390	450	0.98
DZA 50-F63	40.2	32.1	329.4	16,200	2 x 20	52.2	22 x 1.0	42 x 1.5	85	500	400 V-3	1,340	690	1.24
DZA 50-F83	44.9	35.8	439.2	15,525	2 x 20	69.6	22 x 1.0	42 x 1.5	85	500	400 V-3	1,340	690	1.24
DZA 56-F63	51.8	41.3	395.4	21,735	2 x 22	61.8	22 x 1.0	54 x 2.0	86	560	400 V-3	1,400	610	1.34
DZA 56-F83	58.3	46.6	528.0	20,925	2 x 22	82.8	2x22x1.0	2x42x1.5	86	560	400 V-3	1,400	610	1.34
DZA 40-F44	20.1	16.1	132.0	11,560	2 x 18	21.6	15 x 1.0	35 x 1.5	81	400	400 V-3	1,360	250	0.53
DZA 40-F64	25.1	20.1	197.6	10,880	2 x 18	32.8	22 x 1.0	35 x 1.5	81	400	400 V-3	1,360	250	0.53
DZA 45-F44	30.4	24.3	176.0	17,600	2 x 20	28.8	15 x 1.0	42 x 1.5	85	450	400 V-3	1,390	450	0.98
DZA 45-F64	37.6	30.0	264.0	16,200	2 x 20	42.4	22 x 1.0	42 x 1.5	85	450	400 V-3	1,390	450	0.98
DZA 50-F64	53.5	42.8	439.2	21,600	2 x 23	69.6	28 x 1.5	54 x 2.0	86	500	400 V-3	1,340	690	1.24
DZA 50-F84	59.8	47.8	585.6	20,700	2 x 23	92.8	2x22x1.0	2x42x1.5	86	500	400 V-3	1,340	690	1.24
DZA 56-F64	69.0	55.1	527.2	28,980	2 x 25	82.4	28x1.5	54 x 2.0	87	560	400 V-3	1,400	610	1.34
DZA 56-F84	77.7	62.1	704.0	27,900	2 x 25	110.4	2x22x1.0	2x42x1.5	87	560	400 V-3	1,400	610	1.34

Subject to modification.

Standard condition	t_{L1}	t_0	DT1
NB 2 / SC 2	0	-8	8
NB 3 / SC 3	-18	-25	7

Correction factors for other refrigerants

Refrigerant	NB 2 / SC 2	NB 3 / SC 3
R134a	1.00	0.91
R507	0.97	0.97
R22	0.95	0.95

* Throw limit at 0.5 m/s

Küba DZ *production*

Technical data – DZB (E)

7 mm

Type	Rating Q_0 at 50 Hz. DT1. R404A		Cooling surface	Air flow	Air throw *	Tube volume	Connections		Sound	Fans (Operational values at 50 Hz)				
	SC2	SC3					Inlet	Outlet	L_{WA}	Blade	Current	Per Fan		
	kW	kW	m^2	m^3/h	m	dm^3	Ø mm	Ø mm	db (A)	Ø mm	230 ± 10% V-1 50 Hz	rpm	W	A
DZB 40-F41	4.2	3.3	21.8	3,140	2 x 10	5.4	10 x 1.0	28 x 1.5	75	400	400 V-3	1,360	250	0.53
DZB 40-F61	5.5	4.4	32.6	2,980	2 x 10	8.2	10 x 1.0	28 x 1.5	75	400	400 V-3	1,360	250	0.53
DZB 45-F41	6.0	4.8	29.0	4,545	2 x 12	7.2	10 x 1.0	28 x 1.5	79	450	400 V-3	1,390	450	0.98
DZB 45-F61	7.7	6.1	43.4	4,275	2 x 12	10.6	10 x 1.0	28 x 1.5	79	450	400 V-3	1,390	450	0.98
DZB 50-F61	11.4	9.1	72.4	5,670	2 x 15	17.4	10 x 1.0	35 x 1.5	80	500	400 V-3	1,340	690	1.24
DZB 50-F81	13.7	10.9	96.4	5,580	2 x 15	23.2	15 x 1.0	35 x 1.5	80	500	400 V-3	1,340	690	1.24
DZB 56-F61	15.0	12.0	86.8	7,740	2 x 17	20.6	15 x 1.0	35 x 1.5	81	560	400 V-3	1,400	610	1.34
DZB 56-F81	17.7	14.1	115.8	7,560	2 x 17	27.6	15 x 1.0	35 x 1.5	81	560	400 V-3	1,400	610	1.34
DZB 40-F42	8.4	6.7	43.6	6,280	2 x 13	10.8	10 x 1.0	28 x 1.5	78	400	400 V-3	1,360	250	0.53
DZB 40-F62	11.0	8.8	65.2	5,960	2 x 13	16.4	10 x 1.0	35 x 1.5	78	400	400 V-3	1,360	250	0.53
DZB 45-F42	12.0	9.6	58.0	9,090	2 x 15	14.4	10 x 1.0	35 x 1.5	82	450	400 V-3	1,390	450	0.98
DZB 45-F62	15.3	12.3	86.8	8,550	2 x 15	21.2	15 x 1.0	35 x 1.5	82	450	400 V-3	1,390	450	0.98
DZB 50-F62	22.8	18.2	144.8	11,340	2 x 18	34.8	22 x 1.0	35 x 1.5	83	500	400 V-3	1,340	690	1.24
DZB 50-F82	27.3	21.8	192.8	11,160	2 x 18	46.4	22 x 1.0	42 x 1.5	83	500	400 V-3	1,340	690	1.24
DZB 56-F62	30.0	24.0	173.6	15,480	2 x 20	41.2	22 x 1.0	42 x 1.5	84	560	400 V-3	1,400	610	1.34
DZB 56-F82	35.4	28.3	231.6	15,120	2 x 20	55.2	22 x 1.0	42 x 1.5	84	560	400 V-3	1,400	610	1.34
DZB 40-F43	12.6	10.0	65.4	9,420	2 x 16	16.2	10 x 1.0	35 x 1.5	80	400	400 V-3	1,360	250	0.53
DZB 40-F63	16.5	13.2	97.8	8,940	2 x 16	24.6	15 x 1.0	35 x 1.5	80	400	400 V-3	1,360	250	0.53
DZB 45-F43	18.0	14.4	87.0	13,635	2 x 18	21.6	15 x 1.0	35 x 1.5	84	450	400 V-3	1,390	450	0.98
DZB 45-F63	23.0	18.4	130.2	12,825	2 x 18	31.8	22 x 1.0	42 x 1.5	84	450	400 V-3	1,390	450	0.98
DZB 50-F63	34.2	27.3	217.2	17,010	2 x 21	52.2	22 x 1.0	42 x 1.5	85	500	400 V-3	1,340	690	1.24
DZB 50-F83	41.0	32.8	289.2	16,740	2 x 21	69.6	22 x 1.0	42 x 1.5	85	500	400 V-3	1,340	690	1.24
DZB 56-F63	45.0	36.0	260.4	23,220	2 x 23	61.8	22 x 1.0	54 x 2.0	86	560	400 V-3	1,400	610	1.34
DZB 56-F83	53.1	42.4	347.4	22,680	2 x 23	82.8	2x22x1.0	2x42x1.5	86	560	400 V-3	1,400	610	1.34
DZB 40-F44	16.8	13.4	87.2	12,560	2 x 19	21.6	15 x 1.0	35 x 1.5	81	400	400 V-3	1,360	250	0.53
DZB 40-F64	22.0	17.6	130.4	11,920	2 x 19	32.8	22 x 1.0	35 x 1.5	81	400	400 V-3	1,360	250	0.53
DZB 45-F44	24.0	19.2	116.0	18,180	2 x 21	28.8	15 x 1.0	42 x 1.5	85	450	400 V-3	1,390	450	0.98
DZB 45-F64	30.7	24.5	173.6	17,100	2 x 21	42.4	22 x 1.0	42 x 1.5	85	450	400 V-3	1,390	450	0.98
DZB 50-F64	45.5	36.4	289.6	22,680	2 x 24	69.6	28 x 1.5	54 x 2.0	86	500	400 V-3	1,340	690	1.24
DZB 50-F84	54.7	43.7	385.6	22,320	2 x 24	92.8	2x22x1.0	2x42x1.5	86	500	400 V-3	1,340	690	1.24
DZB 56-F64	60.0	48.0	347.2	30,960	2 x 26	82.4	28x1.5	54x2.0	87	560	400 V-3	1,400	610	1.34
DZB 56-F84	70.8	56.6	463.2	30,240	2 x 26	110.4	2x22x1.0	2x42x1.5	87	560	400 V-3	1,400	610	1.34

Subject to modification.

Standard condition	t_{L1}	t_0	DT1
NB 2 / SC 2	0	-8	8
NB 3 / SC 3	-18	-25	7

Correction factors for other refrigerants

Refrigerant	NB 2 / SC 2	NB 3 / SC 3
R134a	1.00	0.91
R507	0.97	0.97
R22	0.95	0.95

* Throw limit at 0.5 m/s

Küba DZ *production*

Technical data – DZK (E)

10 mm

Type	Rating Q_0 at 50 Hz. DT1. R404A		Cooling surface	Air flow	Air throw *	Tube volume	Connections		Sound	Fans (Operational values at 50 Hz)				
	SC2	SC3					Inlet	Outlet	L_{WA}	Blade	Current	Per Fan		
	kW	kW	m^2	m^3/h	m	dm^3	Ø mm	Ø mm	db (A)	Ø mm	230 ± 10% V-1 50 Hz	rpm	W	A
DZK 40-F41	3.6	2.9	15.6	3,330	2 x 11	5.4	10 x 1.0	28 x 1.5	75	400	400 V-3	1,360	250	0.53
DZK 40-F61	4.9	3.9	23.4	3,240	2 x 11	8.2	10 x 1.0	28 x 1.5	75	400	400 V-3	1,360	250	0.53
DZK 45-F41	5.2	4.1	20.8	5,040	2 x 13	7.2	10 x 1.0	28 x 1.5	79	450	400 V-3	1,390	450	0.98
DZK 45-F61	7.1	5.7	31.2	4,905	2 x 13	10.6	10 x 1.0	28 x 1.5	79	450	400 V-3	1,390	450	0.98
DZK 50-F61	9.6	7.7	52.0	5,850	2 x 16	17.4	10 x 1.0	35 x 1.5	80	500	400 V-3	1,340	690	1.24
DZK 50-F81	12.0	9.6	69.4	5,760	2 x 16	23.2	15 x 1.0	35 x 1.5	80	500	400 V-3	1,340	690	1.24
DZK 56-F61	12.8	10.2	62.4	7,965	2 x 18	20.6	15 x 1.0	35 x 1.5	81	560	400 V-3	1,400	610	1.34
DZK 56-F81	15.4	12.3	83.4	7,740	2 x 18	27.6	15 x 1.0	35 x 1.5	81	560	400 V-3	1,400	610	1.34
DZK 40-F42	7.2	5.7	31.2	6,660	2 x 14	10.8	10 x 1.0	28 x 1.5	78	400	400 V-3	1,360	250	0.53
DZK 40-F62	9.8	7.8	46.8	6,480	2 x 14	16.4	10 x 1.0	35 x 1.5	78	400	400 V-3	1,360	250	0.53
DZK 45-F42	10.3	8.2	41.6	10,080	2 x 16	14.4	10 x 1.0	35 x 1.5	82	450	400 V-3	1,390	450	0.98
DZK 45-F62	14.1	11.3	62.4	9,810	2 x 16	21.2	15 x 1.0	35 x 1.5	82	450	400 V-3	1,390	450	0.98
DZK 50-F62	19.2	15.3	104.0	11,700	2 x 19	34.8	22 x 1.0	35 x 1.5	83	500	400 V-3	1,340	690	1.24
DZK 50-F82	23.9	19.1	138.8	11,520	2 x 19	46.4	22 x 1.0	42 x 1.5	83	500	400 V-3	1,340	690	1.24
DZK 56-F62	25.5	20.4	124.8	15,930	2 x 21	41.2	22 x 1.0	42 x 1.5	84	560	400 V-3	1,400	610	1.34
DZK 56-F82	30.8	24.6	166.8	15,480	2 x 21	55.2	22 x 1.0	42 x 1.5	84	560	400 V-3	1,400	610	1.34
DZK 40-F43	10.8	8.6	46.8	9,990	2 x 17	16.2	10 x 1.0	35 x 1.5	80	400	400 V-3	1,360	250	0.53
DZK 40-F63	14.7	11.7	70.2	9,720	2 x 17	24.6	15 x 1.0	35 x 1.5	80	400	400 V-3	1,360	250	0.53
DZK 45-F43	15.5	12.3	62.4	15,120	2 x 19	21.6	15 x 1.0	35 x 1.5	84	450	400 V-3	1,390	450	0.98
DZK 45-F63	21.2	17.0	93.6	14,715	2 x 19	31.8	22 x 1.0	42 x 1.5	84	450	400 V-3	1,390	450	0.98
DZK 50-F63	28.8	23.0	156.0	17,550	2 x 22	52.2	22 x 1.0	42 x 1.5	85	500	400 V-3	1,340	690	1.24
DZK 50-F83	35.9	28.7	208.2	17,280	2 x 22	69.6	22 x 1.0	42 x 1.5	85	500	400 V-3	1,340	690	1.24
DZK 56-F63	38.3	30.6	187.2	23,895	2 x 24	61.8	22 x 1.0	54 x 2.0	86	560	400 V-3	1,400	610	1.34
DZK 56-F83	46.2	36.9	250.2	23,220	2 x 24	82.8	2x22x1.0	2x42x1.5	86	560	400 V-3	1,400	610	1.34
DZK 40-F44	14.4	11.5	62.4	13,320	2 x 20	21.6	15 x 1.0	35 x 1.5	81	400	400 V-3	1,360	250	0.53
DZK 40-F64	19.6	15.7	93.6	12,960	2 x 20	32.8	22 x 1.0	35 x 1.5	81	400	400 V-3	1,360	250	0.53
DZK 45-F44	20.6	16.5	83.2	20,160	2 x 22	28.8	15 x 1.0	42 x 1.5	85	450	400 V-3	1,390	450	0.98
DZK 45-F64	28.3	22.6	124.8	19,620	2 x 22	42.4	22 x 1.0	42 x 1.5	85	450	400 V-3	1,390	450	0.98
DZK 50-F64	38.4	30.6	208.0	23,400	2 x 25	69.6	28 x 1.5	54 x 2.0	86	500	400 V-3	1,340	690	1.24
DZK 50-F84	47.8	38.2	277.6	23,040	2 x 25	92.8	2x22x1.0	2x42x1.5	86	500	400 V-3	1,340	690	1.24
DZK 56-F64	51.0	40.8	249.6	31,860	2 x 27	82.4	28x1.5	54 x 2.0	87	560	400 V-3	1,400	610	1.34
DZK 56-F84	61.6	49.2	333.6	30,960	2 x 27	110.4	2x22x1.0	2x42x1.5	87	560	400 V-3	1,400	610	1.34

Subject to modification.

Standard condition	t_{L1}	t_0	DT1
NB 2 / SC 2	0	-8	8
NB 3 / SC 3	-18	-25	7

Correction factors for other refrigerants

Refrigerant	NB 2 / SC 2	NB 3 / SC 3
R134a	1.00	0.91
R507	0.97	0.97
R22	0.95	0.95

* Throw limit at 0.5 m/s

Küba DZ *production*

Weights, electric defrost

Type	Electrical defrost 230 V-1 / 400 V-3-Y				Weights (net)						Weights (gross)					
	Coil	Tray	Total	Circuits	DZA	DZA E	DZB	DZB E	DZK	DZK E	DZA	DZA E	DZB	DZB E	DZK	DZK E
	kW	kW	kW		kg	kg	kg	kg	kg	kg	kg	kg	kg	kg	kg	kg
DZ 40-41	2.5	1.4	3.8	1	87	91	83	87	81	85	165	169	161	165	159	163
DZ 40-61	2.5	1.4	3.8	1	98	102	91	95	88	92	176	180	169	173	166	170
DZ 45-41	3.1	1.7	4.8	1	101	106	95	100	93	98	206	211	199	204	197	202
DZ 45-61	3.1	1.8	4.8	1	116	121	107	112	103	108	220	225	211	216	207	212
DZ 50-61	5.7	2.3	8.0	2	190	199	174	183	169	178	348	357	332	341	327	336
DZ 50-81	7.6	2.3	9.9	2	218	229	196	207	187	198	376	387	354	365	345	356
DZ 56-61	6.9	2.6	9.5	2	215	227	196	208	189	201	386	398	367	379	360	372
DZ 56-81	9.2	2.6	11.8	2	244	258	218	232	207	221	416	430	389	403	378	392
DZ 40-42	4.3	2.3	6.6	1	133	139	123	129	116	122	238	244	229	235	221	227
DZ 40-62	4.3	2.3	6.6	1	153	159	138	144	134	140	258	264	244	250	239	245
DZ 45-42	5.4	2.9	8.3	1	162	169	150	157	146	153	310	317	297	304	293	300
DZ 45-62	5.4	2.9	8.3	1	191	198	172	179	165	172	338	345	319	326	313	320
DZ 50-62	10.3	3.8	14.1	2	317	328	285	296	274	285	540	551	508	519	497	508
DZ 50-82	13.8	3.8	17.5	2	366	379	321	334	303	316	589	602	544	557	526	539
DZ 56-62	12.0	4.3	16.3	2	373	387	335	349	322	336	623	637	585	599	572	586
DZ 56-82	16.0	4.3	20.3	2	434	450	381	397	360	376	684	700	630	646	609	625
DZ 40-43	6.4	3.2	9.5	1	201	209	187	195	183	191	359	367	344	352	340	348
DZ 40-63	6.4	3.2	9.5	1	233	241	211	219	204	212	390	398	368	376	361	369
DZ 45-43	7.8	4.0	11.8	1	255	264	237	246	231	240	446	455	427	436	421	430
DZ 45-63	7.8	4.0	11.8	1	297	306	269	278	259	268	487	496	459	468	449	458
DZ 50-63	14.5	5.2	19.7	2	440	454	394	408	377	391	729	743	682	696	665	679
DZ 50-83	19.4	5.2	24.6	2	518	534	453	469	426	442	806	822	742	758	715	731
DZ 56-63	17.2	6.4	23.6	2	523	541	466	484	446	464	851	869	794	812	774	792
DZ 56-83	23.0	6.4	29.3	2	614	634	534	554	502	522	941	961	862	882	830	850
DZ 40-44	7.8	4.0	11.8	1	268	278	249	259	243	253	458	468	439	449	433	443
DZ 40-64	7.8	4.0	11.8	1	310	320	282	292	272	282	501	511	472	482	463	473
DZ 45-44	10.4	5.2	15.6	1	325	336	300	311	292	303	558	569	533	544	525	536
DZ 45-64	10.4	5.2	15.6	1	383	394	345	356	332	343	616	627	579	590	566	577
DZ 50-64	20.2	6.9	27.1	2	579	598	515	534	493	512	933	952	869	888	847	866
DZ 50-84	27.0	6.9	33.8	2	677	698	592	613	556	577	1,031	1,052	946	967	910	931
DZ 56-64	23.4	8.0	31.4	2	685	709	608	632	566	590	1,091	1,115	1,014	1,038	972	996
DZ 56-84	31.2	8.0	39.2	2	799	825	692	718	650	676	1,205	1,231	1,099	1,125	1,057	1,083

Subject to modification.

Küba DZ *production*

Dimensions, drain

Type	Dimensions												Drain
	H	Hv	B	T	L	E_1	E_2	E_3	E_4	F	A	W_{min}	D
	mm	mm	mm	mm	mm	mm	mm	mm	mm	mm	mm	mm	inch
DZ 40-41	419	433	1,024	1,513	1,536	650	-	-	-	187	331	1,200	G 1¼
DZ 40-61	419	433	1,024	1,513	1,536	650	-	-	-	187	331	1,200	G 1¼
DZ 45-41	419	439	1,224	1,513	1,536	850	-	-	-	187	331	1,200	G 1¼
DZ 45-61	419	439	1,224	1,513	1,536	850	-	-	-	187	331	1,200	G 1¼
DZ 50-61	522	564	1,624	1,902	1,926	1,050	-	-	-	287	431	1,500	G 1¼
DZ 50-81	522	564	1,624	1,902	1,926	1,050	-	-	-	287	431	1,500	G 1¼
DZ 56-61	522	541	1,824	1,902	1,926	1,250	-	-	-	287	431	1,500	G 1¼
DZ 56-81	522	541	1,824	1,902	1,926	1,250	-	-	-	287	431	1,500	G 1¼
DZ 40-42	419	433	1,624	1,513	1,536	1,250	600	-	-	187	331	1,200	G 1¼
DZ 40-62	419	433	1,624	1,513	1,536	1,250	600	-	-	187	331	1,200	G 1¼
DZ 45-42	419	439	2,024	1,513	1,536	1,650	800	-	-	187	331	1,200	G 1¼
DZ 45-62	419	439	2,024	1,513	1,536	1,650	800	-	-	187	331	1,200	G 1¼
DZ 50-62	522	564	2,624	1,902	1,926	2,050	1,000	-	-	287	431	1,500	G 1¼
DZ 50-82	522	564	2,624	1,902	1,926	2,050	1,000	-	-	287	431	1,500	G 1¼
DZ 56-62	522	541	3,024	1,902	1,926	2,450	1,200	-	-	287	431	1,500	G 1¼
DZ 56-82	522	541	3,024	1,902	1,926	2,450	1,200	-	-	287	431	1,500	G 1¼
DZ 40-43	419	433	2,224	1,513	1,536	1,850	600	1,200	-	187	324	1,200	G 2
DZ 40-63	419	433	2,224	1,513	1,536	1,850	600	1,200	-	187	324	1,200	G 2
DZ 45-43	419	439	2,824	1,513	1,536	2,450	800	1,600	-	187	324	1,200	G 2
DZ 45-63	419	439	2,824	1,513	1,536	2,450	800	1,600	-	187	324	1,200	G 2
DZ 50-63	522	564	3,624	1,902	1,926	3,050	1,000	2,000	-	287	424	1,500	G 2
DZ 50-83	522	564	3,624	1,902	1,926	3,050	1,000	2,000	-	287	424	1,500	G 2
DZ 56-63	522	541	4,224	1,902	1,926	3,650	1,200	2,400	-	287	424	1,500	G 2
DZ 56-83	522	541	4,224	1,902	1,926	3,650	1,200	2,400	-	287	424	1,500	G 2
DZ 40-44	419	433	2,824	1,513	1,536	2,450	600	1,200	1,800	187	324	1,200	G 2
DZ 40-64	419	433	2,824	1,513	1,536	2,450	600	1,200	1,800	187	324	1,200	G 2
DZ 45-44	419	439	3,624	1,513	1,536	3,250	800	1,600	2,400	187	324	1,200	G 2
DZ 45-64	419	439	3,624	1,513	1,536	3,250	800	1,600	2,400	187	324	1,200	G 2
DZ 50-64	522	564	4,624	1,902	1,926	4,050	1,000	2,000	3,000	287	424	1,500	G 2
DZ 50-84	522	564	4,624	1,902	1,926	4,050	1,000	2,000	3,000	287	424	1,500	G 2
DZ 56-64	522	541	5,424	1,902	1,926	4,850	1,200	2,400	3,600	287	424	1,500	G 2
DZ 56-84	522	541	5,424	1,902	1,926	4,850	1,200	2,400	3,600	287	424	1,500	G 2

Subject to modification.

The dimensions are only valid for the standard model design!
Note the differences in dimension among versions and accessories.

Küba DZ *production*

Dimensional drawings

Dimensional drawings Küba DZ *production* (1-4 motors)

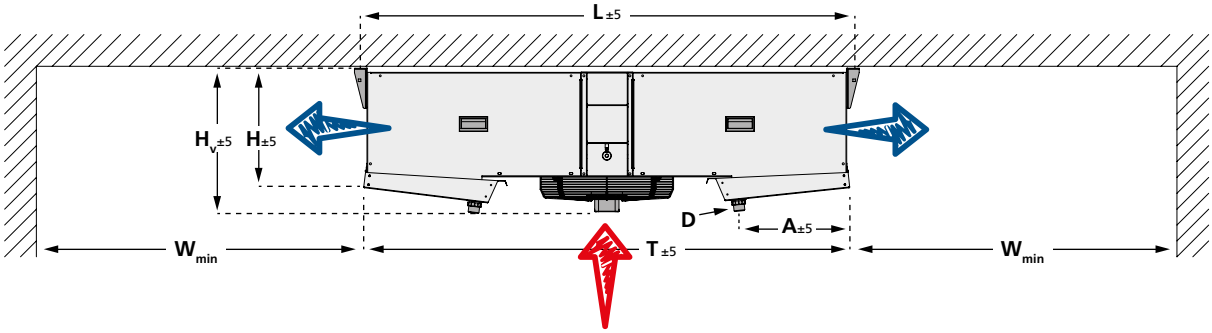

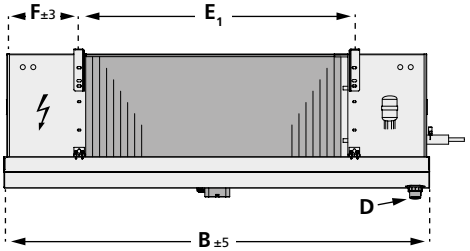

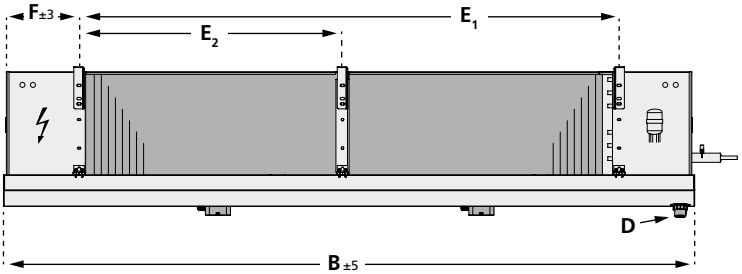

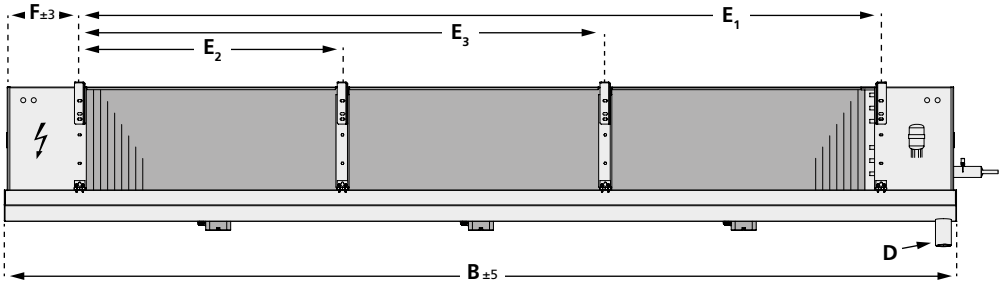

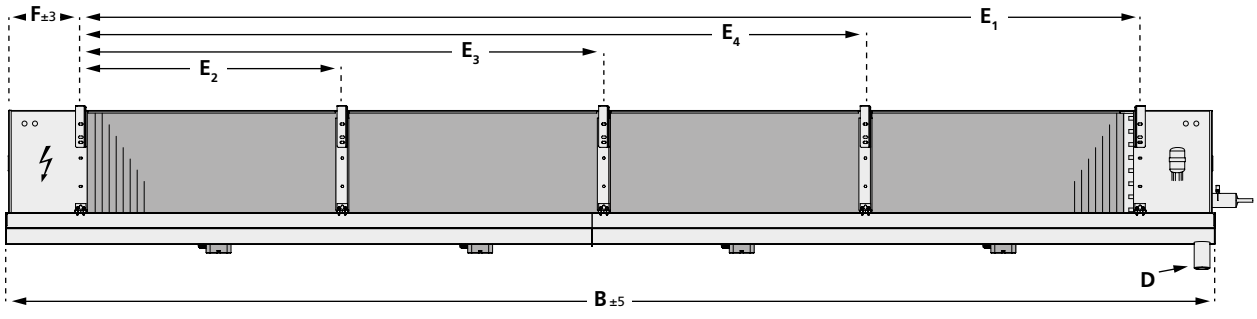

Küba DZ *production*

Variants

Motor-Variants

V 1.10 Fans, work room execution
Fans 400V±10% V-3; Internal, hinged fan

V 1.11 Fans, silent work room execution
Fans 400V±10% V-3; Internal, hinged fan

V 1.33 Fans, silent version
Fans 400V±10% V-3

V 1.52 EC fan with controllable speed

Protection against corrosion

V 3.12 Stainless steel casing
Special protection from salts (no chlorine) and organic acids in the cold room air

V 6.01 Corrosion protection 1
Tubing: Copper (NH_3 units = stainless steel)
Fins: Aluminum, epoxy-resin-coated
End plates: Aluminum protective coating
Casing: Aluminum/zinc coated steel, protective coating on both sides

V 6.02 Corrosion protection 2
Tubing: Stainless steel (V2A)
Fins: Aluminum, epoxy-resin-coated
End plates: Stainless steel
Casing: Aluminum/zinc coated steel, protective coating on both sides
Stainless steel CAL® distributor upon request

V 6.03 Corrosion protection 3
Tubing: Stainless steel (V2A)
Fins: Aluminum
End plates: Aluminum
Casing: Aluminum/zinc coated steel, protective coating on on one side
Stainless steel CAL® distributor upon request

V 6.04 Corrosion protection 4
Tubing: Copper (NH_3 units = stainless steel)
Fins: Aluminum, epoxy-resin-coated
End plates: Aluminum
Casing: Aluminum/zinc coated steel, protective coating on on one side

Construction-Variants

V 3.09 Double-walled, insulated drip tray
Prevents condensed water from forming on the bottom side of the pan, and it reduces the transfer of defrost heat into the cold rooms.

V 3.10 Fans hinged
The fans swivel on stainless steel hinges.

CO_2-Variants

V 7.10 CO_2-Pump
up to 60 bar operating pressure

V 7.45 CO_2-Direct expansion
up to 45 bar operating pressure

V 7.60 CO_2-Direct expansion
up to 60 bar operating pressure

Defrost-Variants

V 4.01 Hot-gas coil in the drip tray (Cu)
Hot-gas connection on both sides; copper

V 4.02 Hot-gas coil in the drip tray (VA)
Hot-gas connection on both sides; stainless steel

V 4.06 Drip tray with electric heating

V 6.05 Hot gas in heat exchanger and drip tray
Hot-gas circuitry for coolers, without non-return valve

V 6.07 Hot gas in heat exchanger and drip tray
Hot-gas connection in coils; hot-gas coil in the drip tray, with non-return valve

Brine defrost with a separate circuit
Upon request

Designs with water/brine flow and with NH_3 pump operation are identified by unit type codes (F/G/N): see page 2.

Electric heater DZHR

For air coolers with forced-draft fans, for assembly on site.
Suitable for air conditioning, or heating, in the winter.
For optimal heat transfer, the heater rods are fitted in
Cu tube sleeves.

- Fully powder-coated (RAL 9018)
- 230 ± 10% V-1~ or 400 ± 10% V-3~ -Y
- Heater rods with CrNi steel sleeve
- Vapour-tight connections
- Connecting cable 1.0 mm² x 1000 mm
- Casing: steel, continuous hot-dip zinc coated
- Fins: aluminium
- Tube sleeves: Cu

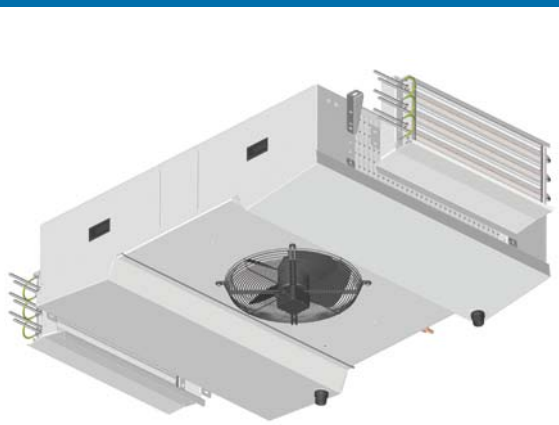

Selection table & dimensions:

For type	Number to order	Current Total	Capacity Total
		A	kW
DZ 40-x1	2 x DZHR 40-1	12.5	2.9
DZ 45-x1	2 x DZHR 45-1	16.0	3.7
DZ 50-x1	2 x DZHR 50-1	33.3	7.7
DZ 56-x1	2 x DZHR 56-1	40.0	9.2
DZ 40-x2	2 x DZHR 40-2	24.0	5.5
DZ 45-x2	2 x DZHR 45-2	31.6	7.3
DZ 50-x2	2 x DZHR 50-2	69.1	15.9
DZ 56-x2	2 x DZHR 56-2	81.5	18.8
DZ 40-x3	2 x DZHR 40-3	35.5	8.2
DZ 45-x3	2 x DZHR 45-3	48.9	11.3
DZ 50-x3	2 x DZHR 50-3	97.8	22.5
DZ 56-x3	2 x DZHR 56-3	118.3	27.2
DZ 40-x4	2 x DZHR 40-4	48.9	11.3
DZ 45-x4	2 x DZHR 45-4	63.1	14.5
DZ 50-x4	2 x DZHR 50-4	138.3	31.8
DZ 56-x4	2 x DZHR 56-4	163.0	37.5

Dimensions:

With the heater DZHR mounted, the width of the air cooler at the suspension points will increase by ca. 230 mm overall (115 mm per side)

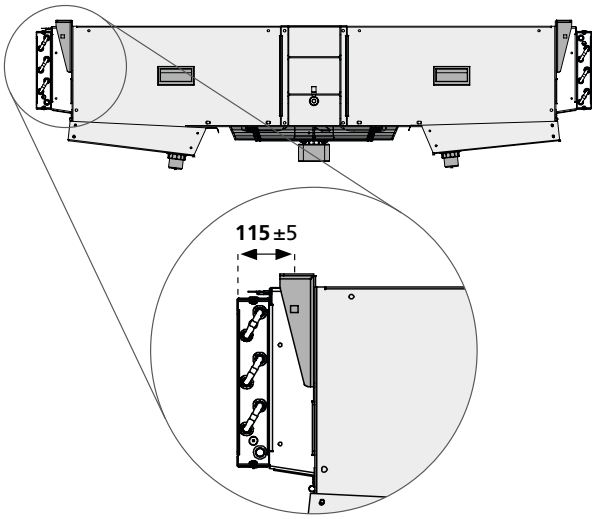

NOTE:

Operate only when the air cooler fans are running, to prevent the cold storage ceiling from overheating. Please observe the corresponding safety guidelines.

www.brand-change.com

GEA Küba GmbH

Kühler Weg 1 · 82065 Baierbrunn · Deutschland
Tel.: ++49(0)89/744 73-0 · Fax: ++49(0)89/744 73-107
kueba@gea.com · www.kueba.de

© Copyright 2015 GEA Küba GmbH · 0094.392BR.DZ.EN · Status as of 08/2015
Subject to technical changes