HCU (with ELM Controls)

Installation and Maintenance Instructions

ENGLISH

1. HEALTH & SAFETY

This concerns the hazar ds, which may be encountered when installing and maintaining the equipment. It is therefore important that these instruct ions are followed.

Before Installation

Ensure that :

a) the voltage, working fl uid and the maximum working pressures stated on the produc t nameplates are suitable for the proposed working environment.
b) the proposed method of mounting is adequate to support the total operational weight of the unit.

During Installation & Maintenance

Ensure that :

a) the units are installed and maintained by qualified personnel only.
b) the electrical supply is isolated and secured from accidental reconnection.
c) the working area is adequately ventilated.
d) the temperature of coils with vinyl coated fins does not exceed 150°C (e.g. during brazing) as toxic fumes would be produced.
e) any adjustment of elec trical components is only be undertaken with the electr ical supply isolated and secured from accidental reconnection.

2. POST DELIVERY INSPECTION

Upon receipt and prior to installation of the unit a Post Delivery Inspection should be carried out, with an y discrepancies being reported to the supplier within 7 days. The unit should be checked for damage and that all loose items have been supplied.

3. INSTALLATION

Handling & Lifting

Lifting holes in the unit base are provided and it is essential that at the lifti ng stage spreader bars be used to prevent damage to the unit. When handling the unit into position, it should be kept as low as possible and should not be tilted more than 30 degrees to the horizontal.

Location

To ensure optimum perform ance, the condensing unit should be situated to give uniform air distribution across the coil. Obstructions to airflow should be minimised.

Coils should ideally be shaded from the sun. Consideration should also be given to servicing requirements - there should be at least 600mm clearance on all access panels.

Floor / Roof Mounting

Fixing holes are provided in the base for securing the condensing unit to a plinth. If the condensing unit is roo f mounted, it is recommended that isolation material be used between the feet of the unit and the roof itself.

Pipework & Brazing

Pipework to and from the unit should be selected to suit the application and not the c onnection size of the unit. Pipework should be supported independently from the condensing unit in a way that prevents the transmission o f vibration to the units. A co mpetent engineer should install the refrigerant pipework to a high standard of refrigeration practice. All pipework used must be clean and to refrigeration quality, all cu ts should be made using a pipe cutter, never a hacksaw, and care must be taken to remove all swarf. Braze using silver bearing brazing rod and ensure that all joints are cleaned before brazing.

During brazing care should be taken to ensure that all components near joints should not be excessivel y overheated, a damp cloth should be applied where necessary. Dry nitrogen should be passed through the pipework during brazing to minimise oxidisation.

Electrical

NOTE : All Electrical connections to the unit should be made in accordance with IEE regulations and with attention to local by-laws.

Electrical components are located in an enclosure situated on the upper front of the unit, behind a lift-of f service panel. Always ensure t hat the electrical supply to the unit is isolated before removing this panel. Access the unit isolator through the service panel lift up flap.

The electrical supply should be routed internally through the unit and be properly secu red before being connected to the unit isolator. Proper phas e matching should be followed to ensure correct compressor rotation, see Three Phase Rotation for further details.

The electrical supply to the unit must be taken from a correctly sized motor rated main circuit breaker or fuse box, corresponding to the current shown on the unit's nameplate.

Units are fitted with a co mprehensive control system, incorporating sequence contro ller, alarm relay, fault detection, and compressor overloads, see Function o f Controls for further details.

All electrical components are tested during the manufacturing process.

Function of Controls: (Please refer to the wiring diagrams supplied with the unit)

NOTE: During initial setup any changes to the controller settings may only be made with the compressor overloads switch ed off. This will prevent inappropriate operation of the compressors.

a) Unit isolator - situated behind a lift-up flap on the front panel of the controls enclosure. WARNING: The mains supply between the junction box and control panel will remain live, even when is olator is turned off.
b) ABA100 Controller - the unit is wired to operate on pressure control, a pressure transducer is fitted to the HT and, when present, the LT suction header and Condense r Liquid outlet.

The ABA100 controller uses the pressure setting in conjunction with a differential setting and compressor on/of f delays to bring compressor stages in or out to match the refrigeration load.

The compressor on delay is factory set to 1 minute; the off delay is factory set to 30 seconds. These may be increased to improve plant stability but should not be set any lower as these settings prevent short cycling of the compressors. The controller will stage compressors in and out as follows:

Comp Stage in after on delay when Suction Pressure = Setpoint + Diff
Comp Stage out after off delay when Suction Pressure = Setpoint - Diff

Comp Stage in with no delay when Suction Pressure = Setpoint + Skip
Comp Stage out with no delay when Suction Pressure = Setpoint – Skip

If the suction pressure remains Higher than the Setpoint + Diff after a compressor stage has been brought in, the next compressor stage will be brought in after the compressor on delay.

This will continue until all compressor stages are running, or until the suction pressure drops lower than the Setpoint + Diff.

If the suction pressure remains Lower than the Setpoint - Diff after a compressor stage has been brought out, the next compressor stage will be brought out after the compressor on delay.

This will continue until all compressor stages are running, or until the suction pressure rises higher than the Setpoint – Diff.

The skip setting should not be adjusted lower than the factory setting as short cycling of the compressors may occur. Do not operate the condensing unit below its suction pressure operating limits - see section 5 (Operating Limits).

The ABA100 controller is factory set to match the configuration of compressors, fans and refrigerant gas. The only setting that requires on site adjustment is the suction control pressure. The controller setting can only be adjusted with the use of an Elm Setup Unit, (not supplied).

The set point should be adjusted as follows :

1) Plug the setup unit into the first suction pressure display's RJ45 socket.
   After initialisation the setup unit will log onto the controller, displaying pack state.
2) Press the 'Page →' button repeatedly until the 'Pack 1 Settings' menu is shown.
3) Press the select button to highlight the pressure setting, the setup unit will display 'PRESS *'.
4) Use the + and – buttons to either raise or lower the set point. The setpoint should be the desired pressure, equivalent to the saturated suction temperature at the compressors in BarG for the refrigerant used. Refer to the chart below for R404A temperature to pressure conversion. The Diff and Skip settings should be left at 0.2 and 3.0 respectively.
5) When the desired pressure is set press 'Execute' twice and the EPROM will be updated, permanently storing the new set point. The setup unit will then redisplay the pack settings.

If the unit has dual HT/LT sections the second pack setting should then be set. Continue to press the 'Page →' button repeatedly until the 'Pack 2 Settings' menu is shown, and then repeat steps 3 to 5 above.

Additional Controller Features:

c) Alarm Relay
The ABA100 alarm relay incorporates a normally closed and normally open contact, which may be wired to switch an external signal. If utilized, the external signal should be no greater than 5 Amp resistive, with a maximum voltage of 40V AC or DC.

The alarm contact is wired to terminals 98, 99 and 100 on the control panel. Terminals 99 – 100 close on alarm, terminals 99 – 98 open on alarm.

Alarms covered :
Alarm chain for each compressor, incorporating compressor discharge temperature protector, low oil level alarm and overload trip.
High pressure fault,
Low pressure fault,

Upon power up of the unit the controller takes time to initialise. During initialisation the Watchdog relay remains de-energised.

d) ABA100 Fault Signals
The ABA100 controller monitors the faults described above and in conjunction with its internal fault codes will show the nature of the fault on the master display.

Fault codes are as follows :
EE = EEPROM fault,
HiPr = High Pressure alarm
LoPr = Low Pressure alarm,
LoSh = Low Pressure shut down
P1..9 = Probe or Transducer fault,
rr = Internal Program fault
run = Compressor run fault,
Al = General Alarm, check Set up unit for fault.
SU = Setup unit connected (not a fault)

e) Master HP/LP switch
The master HP switch is wired into the control system and should only operate under fault conditions. If a high pressure fault occurs, all compressor stages are shut down, the controller will close the fault relay signalling a general alarm. The HP switch will require manual reset, a small delay will be experienced before compressors return to normal operation.

The HP switch is factory set at 24 BarG and should not be adjusted outside of the compressor operating limits - see section 5 (Operating Limits).

The master LP switch is wired in conjunction with the master HP switch and will also only operate under fault conditions. If a low pressure fault occurs, all compressor stages are shut down, the controller will close the fault relay signalling a general alarm. The LP switch will automatically reset.

The master LP switch is factory set at 1.5 BarG and should not be adjusted outside of the compressor operating limits - see section 5 (Operating Limits).

f) Fan speed controller - used to maintain head pressure in reduced ambient conditions. As head pressure falls the fan speed reduces to maintain the pressure. The fan speed continues to reduce until it reaches it's preset minimum. The fan speed controller is factory set for maximum speed at 16 bar, (37°C condensing using R404A). If necessary this can be adjusted as follows :-

1) Remove the front casing of the controller.
2) Adjust the minimum speed setting with the

R404A Pressure (BarG) vs Temperature (°C)

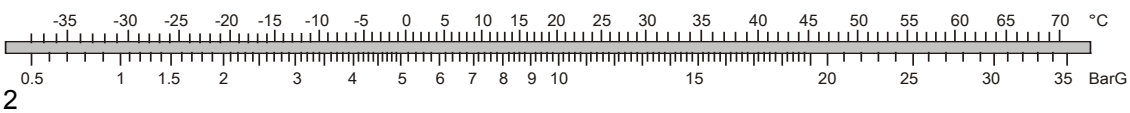

potentiometer mounted on the back PCB. Turn the potentiometer clockwise to raise the minimum speed, and counter-clockwise to lower the minimum speed. If the potentiometer is turned fully counter-clockwise the fans will be stopped when minimum speed is achieved.

3) Adjust the pressure at which the maximum speed is reached by turning the screw on top of the transducer mounted on the right hand side of the controller with capillary. The maximum speed can be adjusted from 14 to 24 bar.

The system is also fitted with a fan speed controller bypass switch, if the head pressure exceeds 20 BarG, the override switch will changeover the fan speed controller relay and run the fans at full speed.

The override switch is factory set and should not be adjusted.

g) Discharge temperature protector, ZF Low temperature compressors only

A temperature-sensing switch is fitted to the discharge line of all low temperature 'ZF' compressors and switches the compressor off if discharge temperature exceeds a preset maximum. This will signal the general alarm for the relevant compressor stage. The discharge temperature protector will automatically reset.

h) Liquid injection, ZF Low temperature compressors only

'L' models use ZF scroll compressors. ZF model compressors require liquid injection to keep discharge temperatures within safe limits. The compressor is equipped with a sensor bulb, which is installed, in the top cap of the compressor. The bulb senses discharge temperature and enables controlled liquid injection as temperature rises above the factory set point. The valve is connected with a flexible hose to the liquid line via a schraeder connection.

i) Optional Manual Backup System -
Single Suction Systems

If fitted, twin LP pressure switches and a relay stepper board is fitted for backup control. In the event of a controller failure the stepper board will continue to stage compressors in and out allowing the system to operate. The fault relay will close signalling a general alarm. The stepper board is factory set for the number of compressors fitted in the unit.

The two backup pressure switches must be set during commissioning based upon the desired suction operating pressure. Set as follows :-

1) The first pressure switch is the 'Un-Load' pressure switch which signals the stepper to turn off a compressor stage, the range must be adjusted to the desired control pressure, and the differential to 0.5 BarG.
2) The second pressure switch is the 'Load' pressure switch which signals the stepper to turn on a compressor stage, the range must be adjusted to the desired control pressure + 1.0 Bar, and the differential to 0.5 BarG. Note : Pressure switches must be set against a calibrated gauge, and not the switch scales.
3) The stepper board has factory set compressor on and off delays, these should not be adjusted unless undesirable operation occurs.

Dual Suction Systems

If fitted, an LP switch is installed for each compressor. In the event of a controller failure the LP switches will continue to stage compressors in and out allowing the system to operate. The fault relay will close signalling a general alarm.

Each low pressure switch must be set during commissioning based upon the desired suction operating pressure. The pressure switches should be set using a calibrated gauge and not the switch scales.

Set as follows :

1) Set the first compressor stage switch range at 0.8 BarG higher than the desired saturated suction pressure (SST), set the differential at 1.0 BarG.
2) Set the second compressor stage switch range at 1.0 BarG higher than the desired SST, set the differential at 1.0 BarG.
3) Set the third compressor stage switch range at 1.2 BarG higher than the desired SST, set the differential at 1.0 BarG.
4) If fitted, set the fourth compressor stage switch range at 1.4 BarG higher than the desired SST, set the differential at 1.0 BarG.

This will maintain control of the unit, switching in compressors on a 0.2 BarG differential. Compressors will switch out 1.0 BarG lower than their range setting.

If the unit incorporates HT and LT compressors with independent suction lines the relevant to the HT switches should be set as above for the relevant number of stages, then the LT switches should be set, again as above for the relevant number of stages and the required SST's.

j) External Communications
Elm ABA100 Genus Network

The ABA100 controller may be linked to an Elm Genus Network, via this link all controller inputs can be remotely monitored and controller settings modified.

If utilized the unit should be setup onto the Elm Genus Network in accordance with Elm's instructions and recommendations.

k) Liquid Receiver

The liquid receiver located beneath the condenser coil serves as a storage vessel for the liquid refrigerant. It may be used to hold charge during times of low capacity running, and in conjunction with the condenser coil to store the system charge when the unit is non operational.

It also incorporates several features which are integrated into the unit :

1) Liquid level indicator : indicates the receiver liquid level as a percentage of its pump down capacity.
2) Liquid level sight glass : allows for visual inspection of the receiver liquid level, when it appears full the receiver is at 80% capacity.
3) Relief Valve : fitted to the top of the receiver, is pre-set to relieve at 26.0 BarG. If the unit is not located externally in open air the relief valve should be piped away to open air. Regular maintenance is required see **6. Maintenance *Every 3-6 Months.***
4) Optional Low level liquid sensor: if fitted, an optical sensor detects when the liquid level is exceptionally low. It is wired back to the ABA100 controller, and will alarm out via the General Fault Alarm, the sensor will auto reset.

4. EVACUATION AND CHARGING

Before operating the unit for the first time, check that all guards, motors, mountings and electrical covers are secure, and that all necessary terminal block links are added/removed and that fans rotate freely. The unit has been leak tested, dehydrated and filled with a holding charge of "dry air" during manufacture. The entire system should be evacuated prior to charging as follows:

The front lower and upper doors should be opened/removed to provide access to the compressor suction service valves and the receiver service valves. The suction filter elements, and liquid filter drier core are fitted

into their respective shells. In addition to these, spares are supplied loose within the unit.

Ensure that all system shut off valves are open, including receiver service valves, liquid filter bypass, discharge and suction line ball valves, and all oil management shut off valves.

Solenoid valves on the oil level floats and liquid injection circuits should be opened with manual solenoid valve operating magnets.

Connect vacuum pump to the 1/4" flare connections on the main suction line header and receiver service valves. Ensure each service valve is mid seated, the valve spindles should be screwed in a few turns from the back seated position to open the ports.

Evacuate the system to below 225 microns (0.3 mbar). The pump should be isolated and the system pressure monitored. A rapid continuous rise would indicate a leak in the system.

During the evacuation process the compressor crankcase heaters should be switched on.

DO NOT START OR INSULATION TEST THE COMPRESSORS UNDER VACUUM.

The unit should be charged with the specified refrigerant (R404A/R407C/R134a) until the sight glass is just clear at the normal operating condition. Charge the unit whilst under vacuum only with liquid refrigerant via the receiver inlet service valve. Additional charge should be added at the evaporator distributor or immediately after the expansion valve. Liquid charging direct to the suction line is not recommended.

If after charging the unit is left with the power supply turned off, the compressor crankcase heaters should be switched on for a minimum of 3 hours before the unit is started. This will ensure that the compressor sumps are free from liquid refrigerant.

DO NOT ALLOW COMPRESSORS TO CYCLE UNDER LOW PRESSURE WHILST CHARGING.

Three Phase Rotation

Important: Scroll compressors, like several other types of compressor, will only compress in one rotational direction. Three-phase compressors will rotate in either direction depending upon phasing of the power to T1, T2 and T3. Since there is a possibility of connecting power in such a way as to cause rotation in the reverse direction, it is important to check this.

Verification of the proper rotation direction is made by observing that suction pressure drops and discharge pressure rises when the compressor is energised. Reverse rotation results in a sound level above that of the correct rotation direction, as well as substantially reduced current draw. Rotation can be changed by swapping over any two of the supply phases.

Oil Recovery and Oil Charging

The unit is fitted with a High Pressure oil management system which must be charged during initial system operation.

The oil separator incorporates an oil reservoir, the charge of which is approximately 3.3 litres.

Each compressor is pre-charged with Polyolester oil, additional oil must be added into the oil return header when the system is at rest.

Connect oil pump to the spare Schrader connection on the oil return header. If the unit is being installed into a new system add oil to maintain a level in the upper sight glass of the reservoir. If the unit is being installed into an existing system add oil to maintain a level in the lower sight glass of the reservoir.

After two days of system operation the oil level should be checked, and if required add or remove oil to maintain a level in the upper sight glass of the reservoir.

During normal operation each oil management float should show a level between ½ and ¾ full sight glass. Only suitable Polyolester oil, such as Mobil EAL Arctic 22 CC (or equivalent) should be used.

Initial Starting / Running

When the unit has been installed, the relevant oil and refrigerant charges have been added, and the correct controller settings entered it may be set in to normal operation as follows :

1) Ensure the suction line, discharge line, receiver inlet and outlet ball valves are open.
2) Ensure the liquid filter drier bypass is closed and the refrigerant directed to pass through the filter drier.
3) Ensure all solenoid-operating coils removed during evacuation have been replaced.
4) Turn off all compressor overloads.
5) Turn on the mains supply and control panel isolator, and single phase MCB's.
6) Allow the controller to initialise, (the controller status can be monitored using a set up unit).
7) Turn on the overload to the first compressor stage, at the same time energise the evaporator liquid line solenoids. After the compressor on delay the first stage should start. Ensure correct compressor rotation, as previously described.
8) Repeat step 7 one stage at a time until all compressors are running. If all compressors will not run at the desired suction setting ensure all evaporators are running and that the system is adequately charged. Ambient temperature conditions may also affect the number of stages required.
9) Check that the condenser fans operate and rotate in the correct direction. The airflow direction will be across the motor and out through the fan guard.
10) Allow the unit to operate as normal for 48 hours and then carry out the **48 hours operation after Initial Start-up** Maintenance, as described below.

5. OPERATING LIMITS

HCU Compression Ratio Limits

HT Compressors - The minimum HT saturated suction temperature permitted is -20°C, equivalent to a minimum pressure setting of 2.00 BarG (R404A).

LT Compressors - The minimum LT saturated suction temperature permitted is -40°C, equivalent to a minimum pressure setting of 0.35 BarG (R404A)

Multiple Evaporator Applications

Where one unit is connected to multiple evaporators, operated independently from one another, it is vital that the minimum saturated suction temperatures; (shown above) are not exceeded when the unit is operating on one compressor stage.

Compressor Anti Cycle

The sequence controller incorporates compressor on and off delays. To prevent excessive starting and cycling of any compressor stage a **minimum** compressor on delay of 1 minute **must** be set. Failure to observe this limit will void the compressor warranty.

6. MAINTENANCE

WARNING! THE UNIT MUST BE ELECTRICALLY ISOLATED BEFORE MAINTENANCE WORK IS UNDERTAKEN

The following routine maintenance is required:

48 hours operation after Initial Start-up

Check torque setting of compressor Rotalock valves to the values stipulated in the subsection “Every 3-6 months”. The oil separator filter element should be changed for the spare filter supplied. The suction line filter elements should be removed, and the filter cages stored safely within the unit for future use. Permanent use of suction line filters is not recommended due to increased pressure drop and risk of break up after long periods of operation.

The separator reservoir oil level should be checked and oil added or removed to maintain a level in the upper sight glass.

Every 3-6 months

The condenser should be cleaned to ensure correct operation of the condensing unit. When the condenser coil is obstructed by dirt or rubbish, the unit will experience high condensing temperatures which will result in higher running costs, loss of compressor efficiency and ultimately overheating of the compressors and/or condenser fans.

The pressure drop across all filters should be measured, if above 0.5 Bar the filter elements should be changed. The sight glass moisture indicator should also be checked, and appropriate action taken if moisture is shown to be present. If required the liquid line filter element should be changed as follows :

1) Front seat the receiver outlet valve and allow the system to pump down.
2) Changeover the liquid bypass valve, and shut the filter outlet valve to divert the refrigerant around the filter drier. The receiver outlet valve may be re-opened to allow continued system running.
3) Using a set of service gauges drain any remaining charge in the filter from the schrader after the filter to the main suction line. Disconnect gauges after this operation.
4) Remove the bolts from the filter shell front plate, taking care to avoid any release of refrigerant from the shell. (as per note 3).
5) Remove the core & cage assembly and unscrew the plastic ends.
6) Open the new core and re-assemble into the cage.
7) Insert the new core & cage, replace the holding spring in front of the cage, and bolt up the filter front plate.
8) Evacuate the filter shell to remove any air, when completed open the filter outlet ball valve and changeover the bypass valve to restore the normal refrigerant flow.
9) Leak test the filter drier to ensure there are no leaks after maintenance, using a recognized method.

NOTE: The bypass arrangement should not be used for long periods of time as contaminants and moisture will be allowed to pass through to the rest of the system.

The pressure relief valve should be inspected for any pressure release. If a release has occurred or there is a requirement by the customer maintenance schedule the relief valve should be changed.

The pressure relief valve/s must be changed every 5 years.

If a Dual PRV and Bursting disc arrangement is fitted check the pressure indicator gauges between the bursting disc’s and PRV’s. If pressure is evident the 3 way relief valve should be changed over to the second relief outlet, and both the ruptured burst disc and PRV should be changed.

Ensure a proper thread sealant is used on all taper thread joints, liquid PTFE paste is recommended (Do not use PTFE Tape). Any replaced components should be fully leak tested after fitting.

Every 12 months

Check security of fixings, especially the fan and motor mounting. Check refrigerant pipeline for damage and leaks. Check motor (fans should rotate freely).

Check torque settings of compressor rotalock valves,

ZF09...18, ZB 15...45 - Discharge 60-70 Nm, Suction 90-100 Nm.

ZF24...40, ZS 56...92 - Discharge 90-100 Nm, Suction 100-120 Nm.

In the event of Compressor Burn out

If suction line burn out filters are used they must not be left in the system indefinitely, as the pressure drop across the filter will impair the system performance.

When Necessary

Clean the fins, guard and general casework. Care must be taken when cleaning the fins to prevent damage. It is recommended that a soft brush and mild detergent solution be used.

High-pressure spray washing of the unit must not be undertaken, as damage to fin coatings and components will occur. Low-pressure spray washing using specialist coil cleaning solutions is recommended.

WARNING! SAFETY GOGGLES MUST BE WORN DURING THIS OPERATION.

7. INVALIDATION OF GUARANTEE

Searle accepts no liability according to Searle's terms and conditions of sale, or for loss or damage arising as a result of:

(i) Failure to install, set up or put to work any part of equipment in the manner specified in the I&M instructions, or
(ii) Failure to maintain the equipment in the manner specified in the I&M instructions, or
(iii) Replacement parts, additional parts or accessories manufactured by persons other than Searle having been incorporated into, or attached to the equipment, or
(iv) The equipment having been adapted for use, operated or used in such a way as does not conform to Searle's recommendations.

Adjustment of settings outside Operating Limits in section 5 will invalidate warranty.

8. DIMENSIONS Note: All diagrams shown as 2 fan units, 3 fan units have the same overall dimensions.

Standard Vertical Flow units HCU 'V'

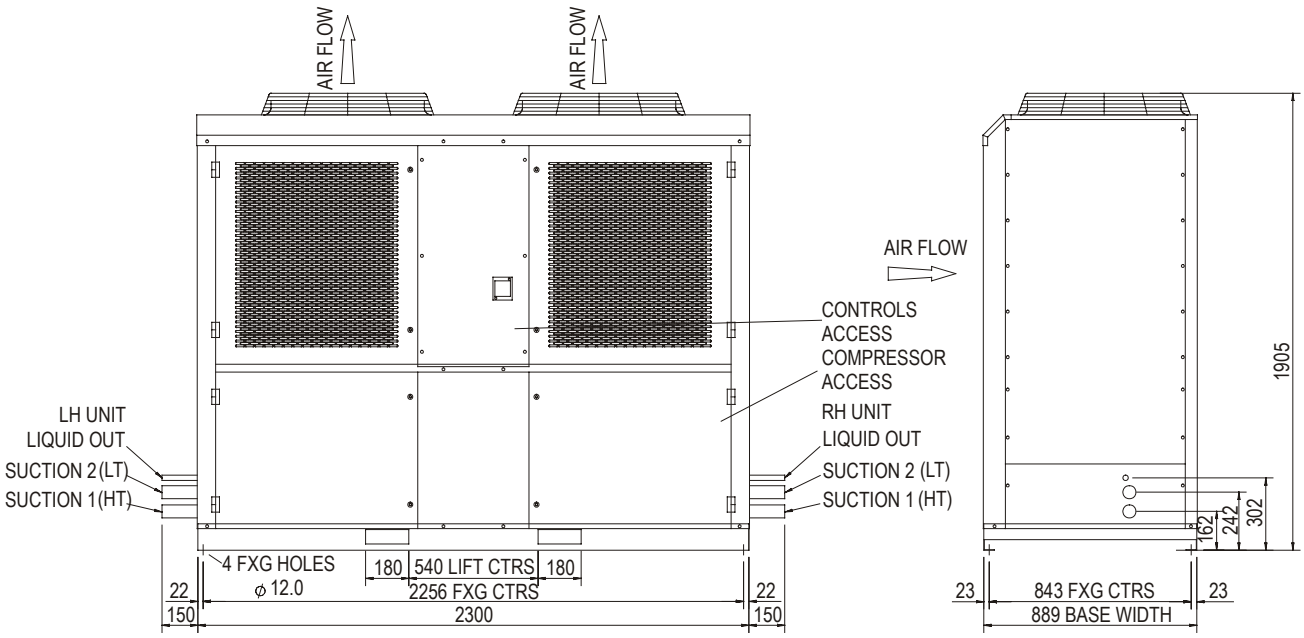

Horizontal Flow units HCU 'H'

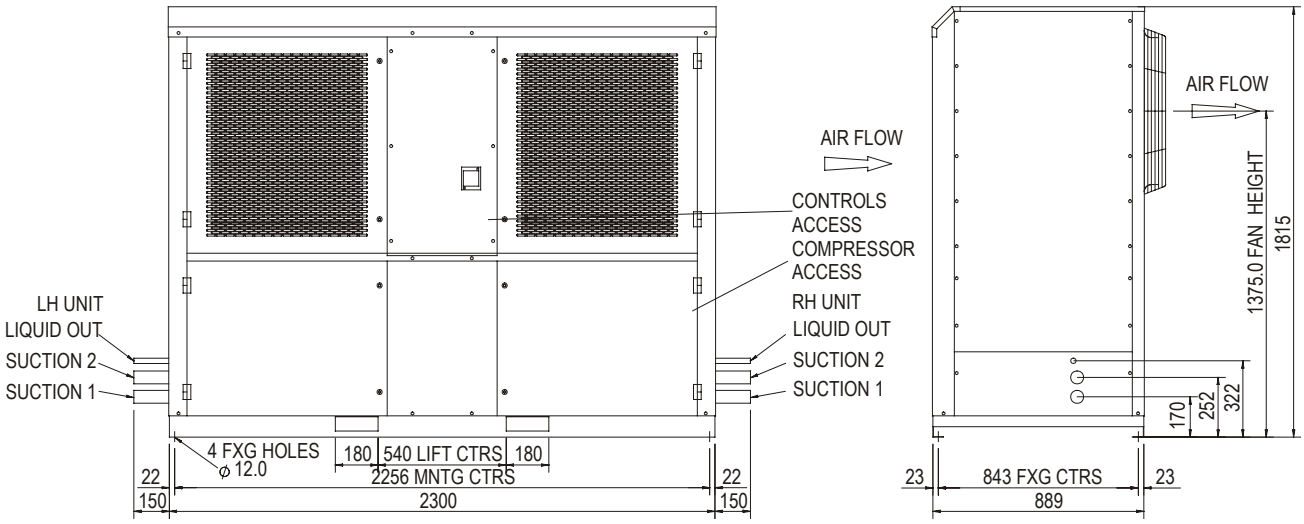

Reverse Flow units HCU 'R'

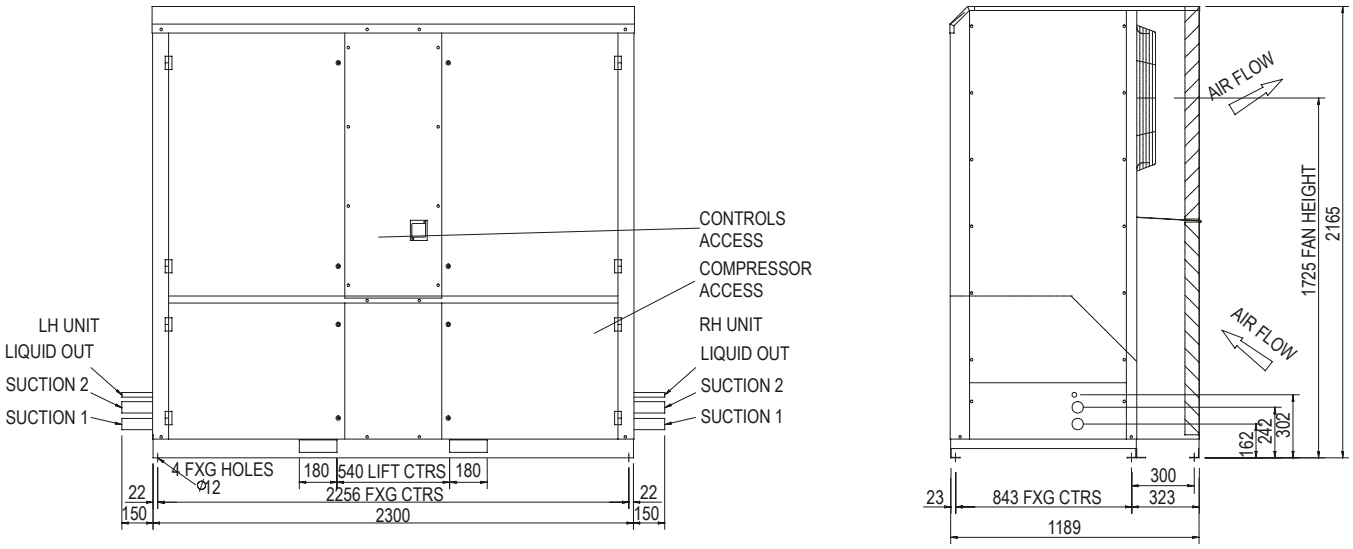

9. SPECIFICATIONS

Due to the large number of possible unit conf igurations the specificati ons below relate to the individual components, the overa ll unit figures should be calculated from t he summation of the individual component fi gures, i.e. for Current Draw, add each individual compressor Amps to each individual fan Amps.

For weight add the appropriate base unit weight V / H or R to the compressor and fan weights.

Compressor		FLC	LRA	Power Input	Weight	Winding Resistance
Ref	Model	(A)	(A)	(kW)*	(kg)	(Ohms)
0	ZB15	4.9	26	1.82	26	7.1
1	ZB19	6.5	32	2.10	29	5.94
2	ZB21	7.2	40	2.26	30	4.83
3	ZB26	8.9	46	2.51	31	4.03
4	ZB30	10.3	49	3.35	40	3.58
5	ZB38	12.8	66	4.20	41	2.65
6	ZB45	13.1	74	4.81	44	2.27
7	ZB56	15.4	99	6.20	100	1.41
8	ZB75	21.71	27	8.05	100	1.02
9	ZB92	25.1	167	10.30	110	0.83
C	ZF09	6.0	40	1.79	30	4.83
D	ZF11	7.0	46	2.16	31	4.03
E	ZF13	8.0	52	2.33	41	3.64
F	ZF15	10.0	64	2.83	42	2.75
G	ZF18	12.0	74	3.43	44	2.27
H	ZF24	16.1	99	4.52	100	1.141
J	ZF33	22.31	27	6.20	100	1.02
K	ZF40	25.1	167	7.40	110	0.83
L	ZF48	30.6	198	9.00	119	0.72

Condenser Fans		FLC	LRA	Power Input	Speed	Weight
Ref	Fan Speed (A)	(A)	(kW)	(RPM)	(kg)	
6	6 Pole 1ph	3	7	0.65	880	13.2
8	8 Pole 1ph	1.7	2.4	0.335	650	13.2
12	12 Pole 1ph	1 3	2	0.145	415	13.2

Casework / Ctrls / Pipework		Weight	Height	Width	Depth
Ref	Airflow Style	(kg)	(mm)	(mm)	(mm)
H	Horizontal Flow	498	1815	2300	889
V	Vertical Flow	498	1905	2300	889
R	Reverse Flow	632	2165	2300	1189

Note : Unit pipework connections add 150mm to the Width above

* Compressor Power based on nominal running conditions using R404A refrigerant.

ZF Compressors : -35°C SST, 40°C Condensing, ZB Compressors : -10°C SST, 45°C Condensing.

GEA Refrigeration

GEA Searle Ltd

20 Davis Way, Newgate Lane, Fareham, PO14 1AR
Tel. +44 (0) 1329 823344, Fax +44 (0) 1329 821242
sales@searle.co.uk, www.searle.co.uk