Mounting guide

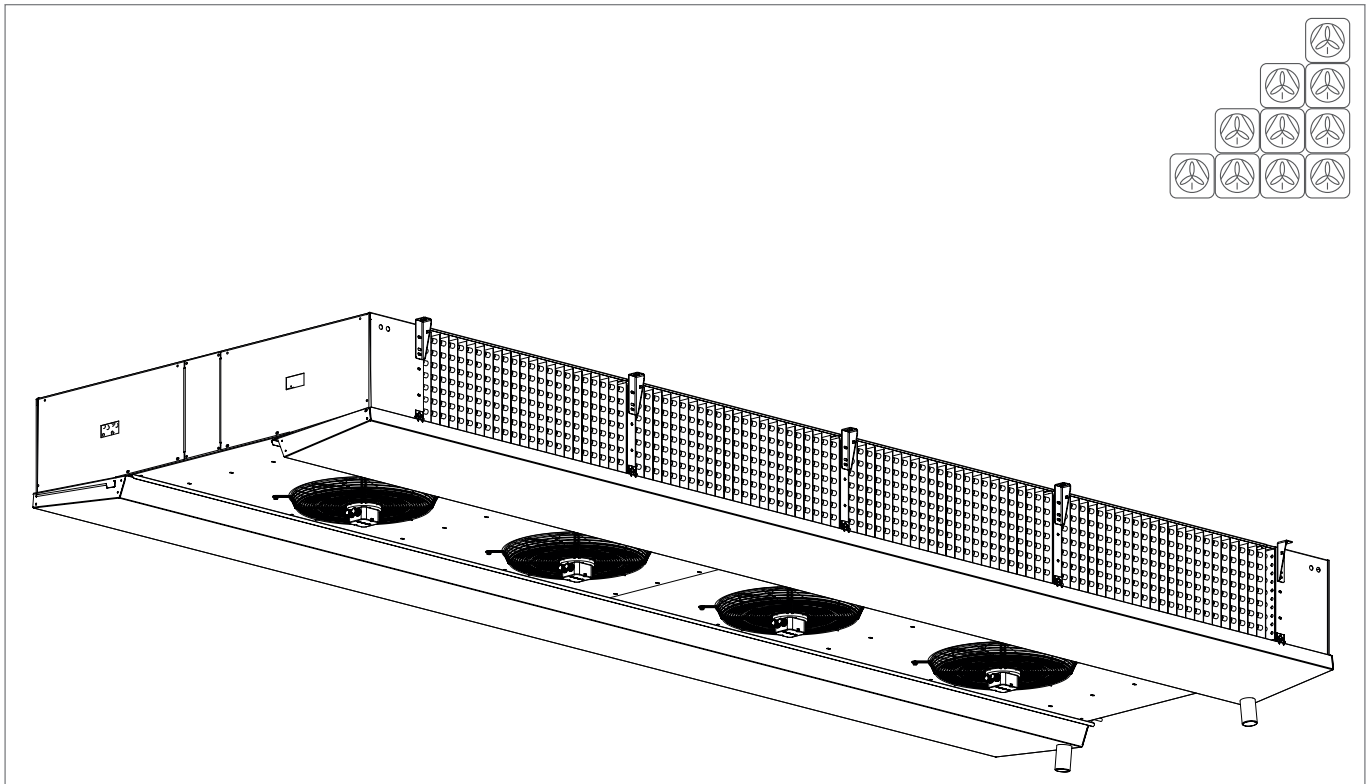

Küba DZ *production*

Mounting guide
Page 2-6

- Dimensions
- Weights
- Assembly

Electrical wiring
Page 7-21

- Motor wiring diagram
- Electrical defrost wiring diagram
- Cabling

Dimensions

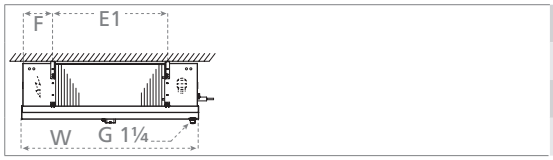

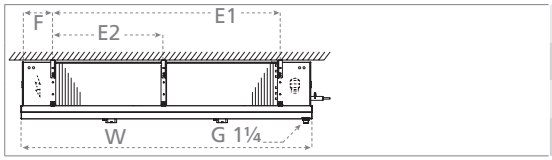

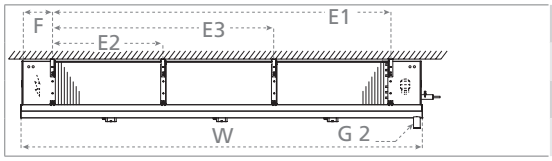

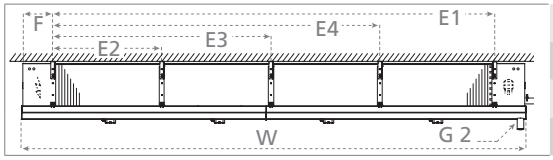

Type	H_V ±5	W ±5	D ±5	L ±5	F ±3
DZA, DZB, DZK	mm	mm	mm	mm	mm
40-F41 / F61	433	1024	1513	1536	187
45-F41 / F61	439	1224	1513	1536	187
50-F61 / F81	564	1624	1902	1926	287
56-F61 / F81	541	1824	1902	1926	287
40-F41 / F62	433	1624	1513	1536	187
45-F41 / F62	439	2024	1513	1536	187
50-F61 / F82	564	2624	1902	1926	287
56-F61 / F82	541	3024	1902	1926	287
40-F41 / F63	433	2224	1513	1536	187
45-F41 / F63	439	2824	1513	1536	187
50-F61 / F83	564	3624	1902	1926	287
56-F61 / F83	541	4224	1902	1926	287
40-F41 / F64	433	2824	1513	1536	187
45-F41 / F64	439	3624	1513	1536	187
50-F61 / F84	564	4624	1902	1926	287
56-F61 / F84	541	5424	1902	1926	287

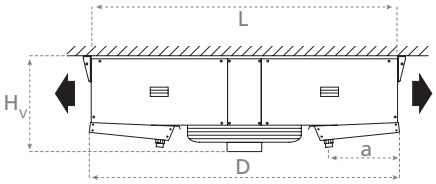

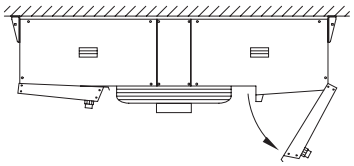

Type	A ±5	E1 ±5	E2 ±5	E3 ±5	E4 ±5
DZA, DZB, DZK	mm	mm	mm	mm	mm
40-F41 / F61	331	650	–	–	–
45-F41 / F61	331	850	–	–	–
50-F61 / F81	431	1050	–	–	–
56-F61 / F81	431	1250	–	–	–
40-F41 / F62	331	1250	600	–	–
45-F41 / F62	331	1650	800	–	–
50-F61 / F82	431	2050	1000	–	–
56-F61 / F82	431	2450	1200	–	–
40-F41 / F63	324	1850	600	1200	–
45-F41 / F63	324	2450	800	1600	–
50-F61 / F83	424	3050	1000	2000	–
56-F61 / F83	424	3650	1200	2400	–
40-F41 / F64	324	2450	600	1200	1800
45-F41 / F64	324	3250	800	1600	2400
50-F61 / F84	424	4050	1000	2000	3000
56-F61 / F84	424	4850	1200	2400	3600

Weights

Type		DZA	DZB	DZK	DZA	DZB	DZK	DZA	DZB	DZK	DZA	DZB	DZK
		kg	kg	kg	kg	kg	kg	kg	kg	kg	kg	kg	kg
DZ-F/DZ-G	40-F4x	87	83	81	133	123	116	201	187	183	268	249	243
DZ-F/DZ-G	40-F6x	98	91	88	153	138	134	233	211	204	310	282	272
DZ-F/DZ-G	45-F4x	101	95	93	162	150	146	255	237	231	325	300	292
DZ-F/DZ-G	45-F6x	116	107	103	191	172	165	297	269	259	383	345	332
DZ-F/DZ-G	50-F6x	190	174	169	317	285	274	440	394	377	579	515	493
DZ-F/DZ-G	50-F8x	218	196	187	366	321	303	518	453	426	677	592	556
DZ-F/DZ-G	56-F6x	215	196	189	373	335	322	523	466	446	685	608	566
DZ-F/DZ-G	56-F8x	244	218	207	434	381	360	614	534	502	799	692	650
DZ-N	40-F4x	92	87	85	140	130	122	212	196	192	281	261	255
DZ-N	40-F6x	103	95	93	160	145	140	245	222	215	326	296	286
DZ-N	45-F4x	106	100	98	170	157	153	268	248	242	341	315	307
DZ-N	45-F6x	122	112	108	200	181	174	311	282	272	402	363	349
DZ-N	50-F6x	200	183	177	333	300	288	462	413	396	608	541	517
DZ-N	50-F8x	229	205	196	384	337	319	544	476	448	710	621	584
DZ-N	56-F6x	226	205	198	392	352	338	550	489	468	719	638	595
DZ-N	56-F8x	256	229	217	456	400	378	644	561	528	839	727	683

Assembly

1

1.1

1.2

1.3

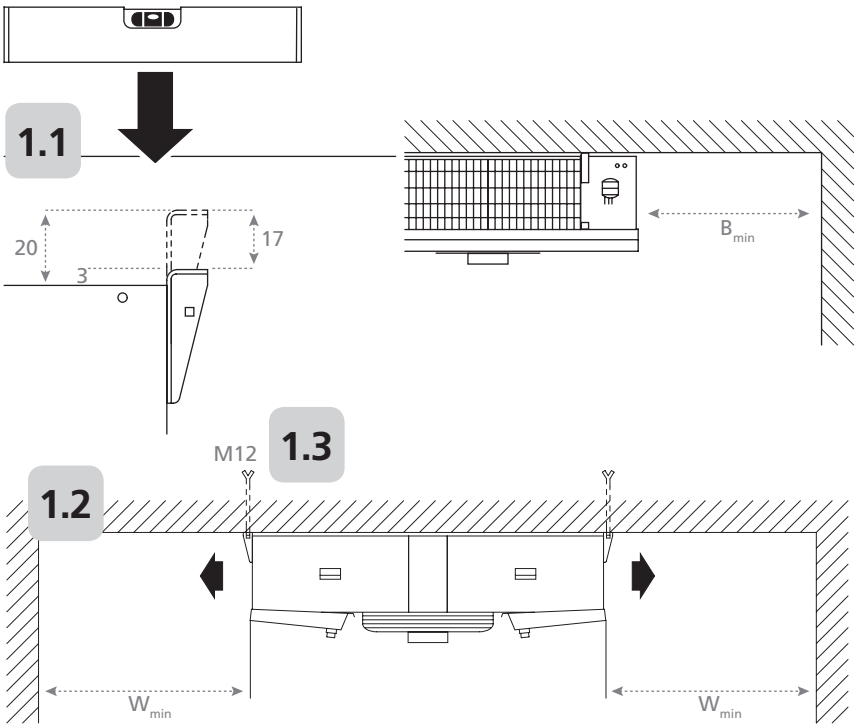

DZAE DZBE DZKE	~B_{min}	W_{min}
	mm	mm
40	850	1200
45	850	1200
50	1100	1500
56	1100	1500

2

2.1

2.2

2.3

2.4

2.5

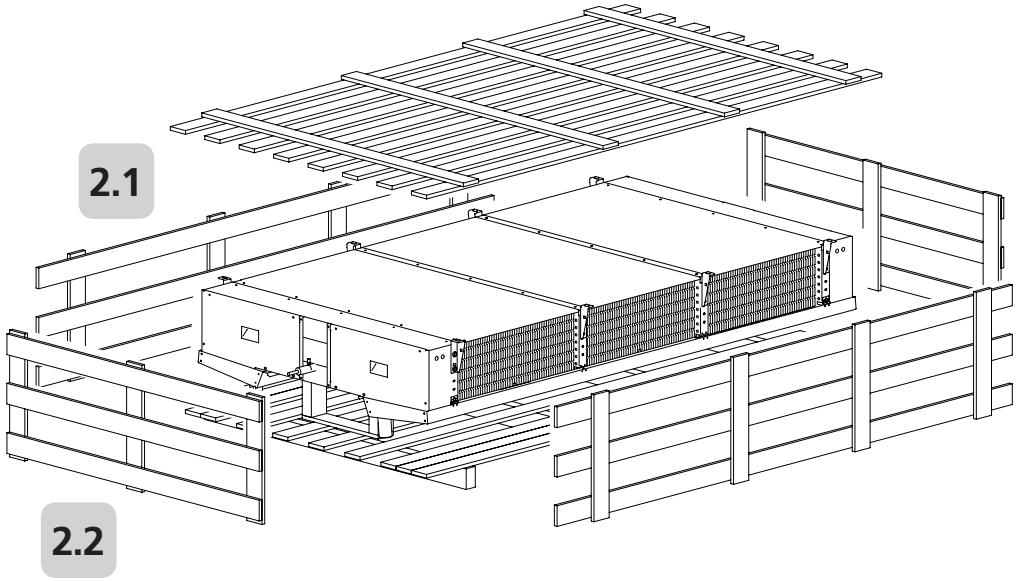

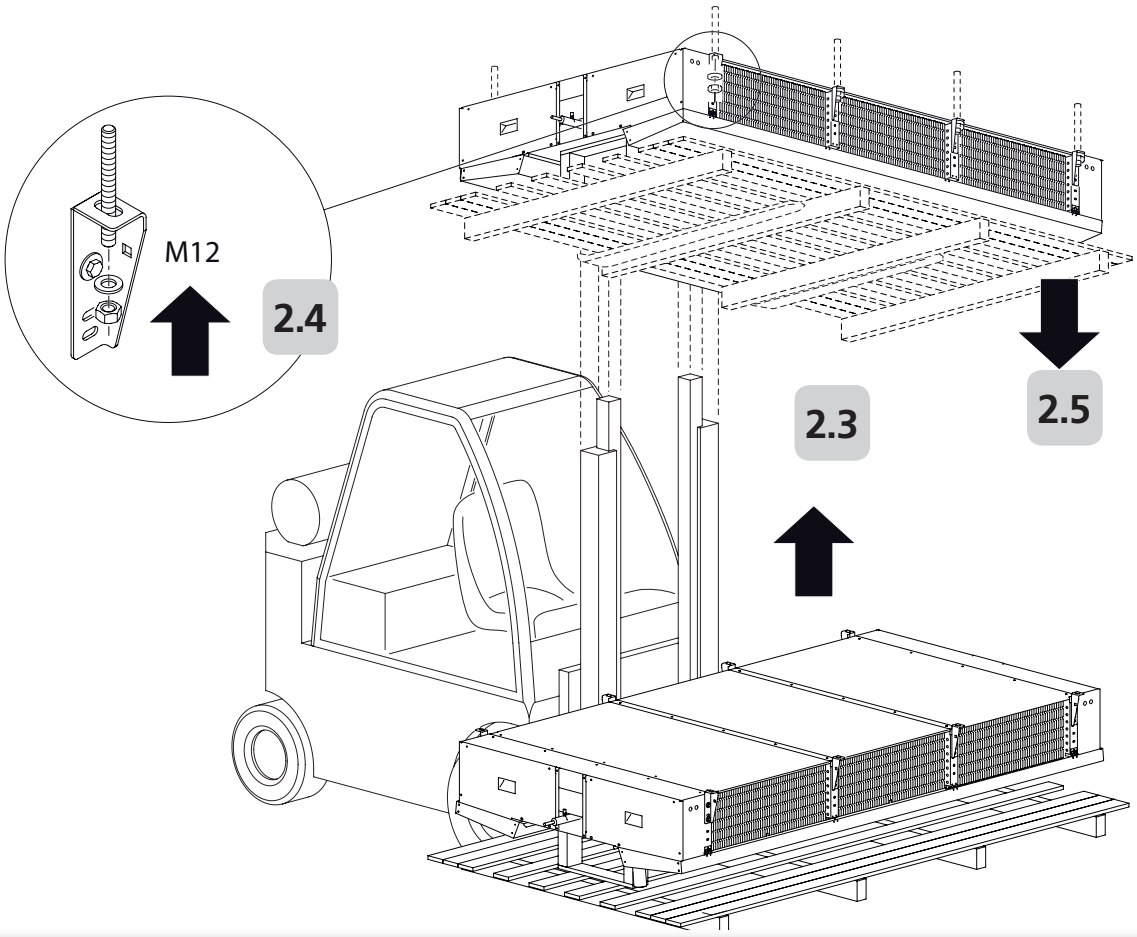

2

2.1

2.2

2.3

2.4

2.5

2.6

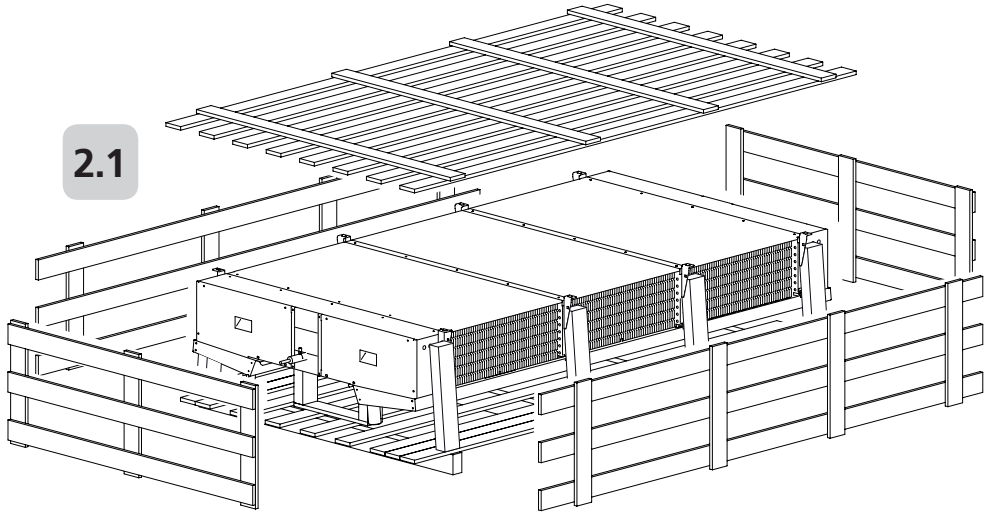

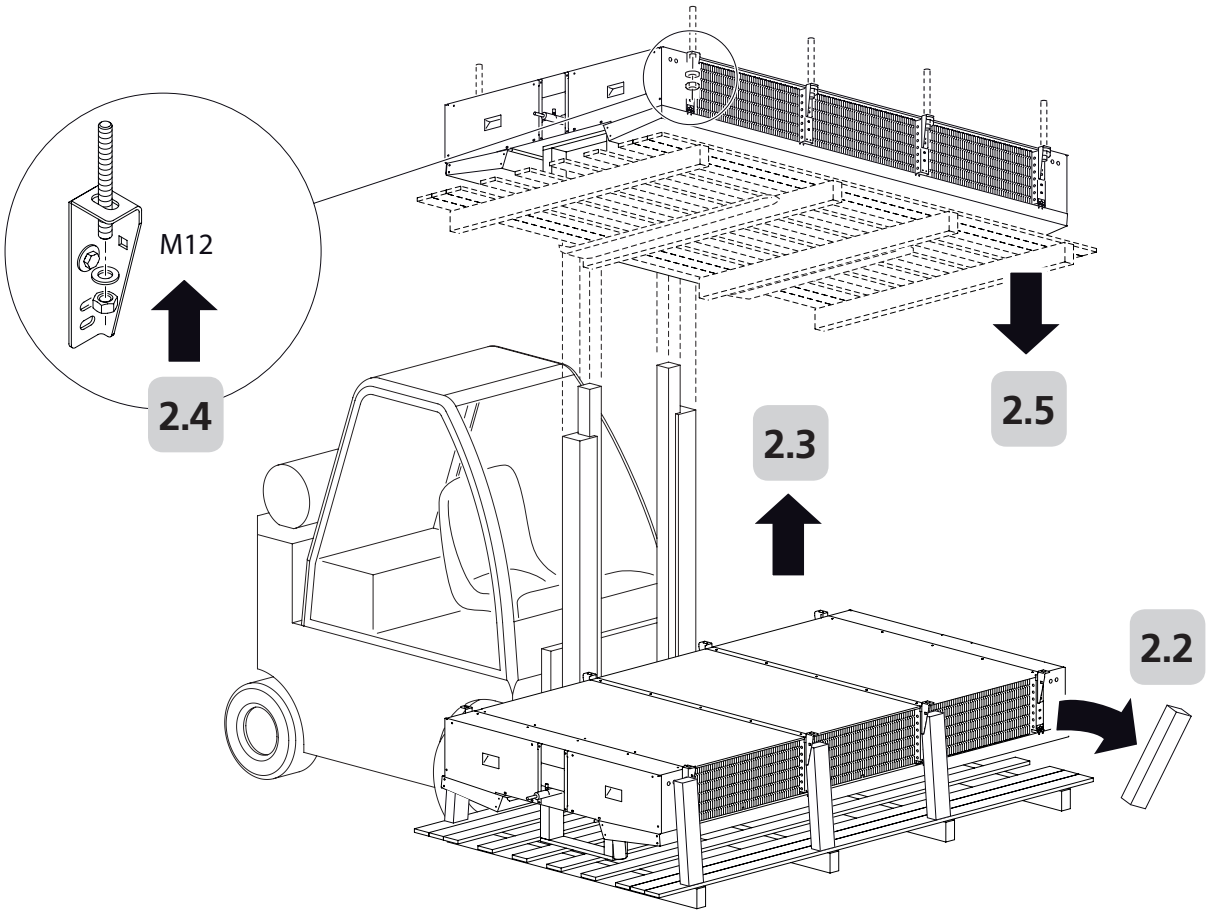

Assembly

3

3.1

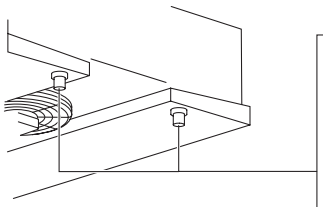

DZ &

= 2 x G 1¼

DZ &

= 2 x G 2

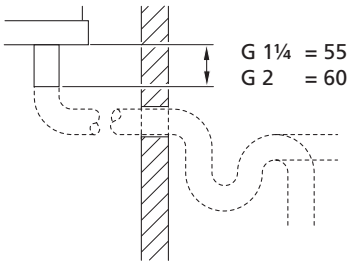

4

4.1

4.2

4.3

4.4

4.5

4.6

4.7

4.8

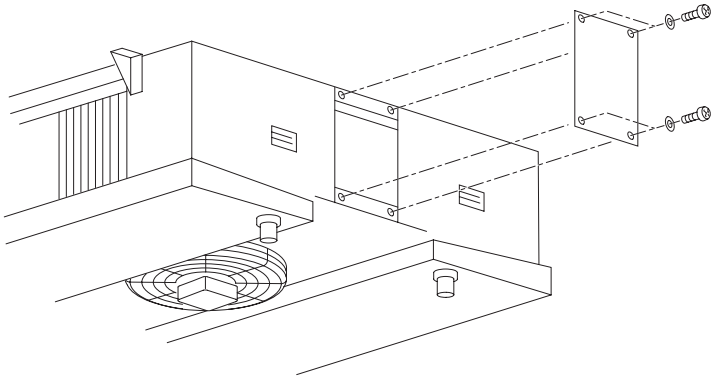

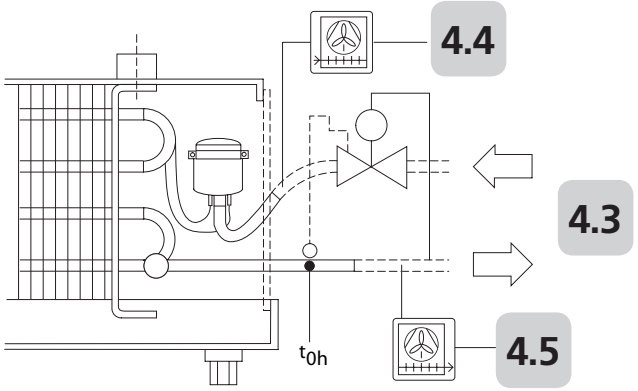

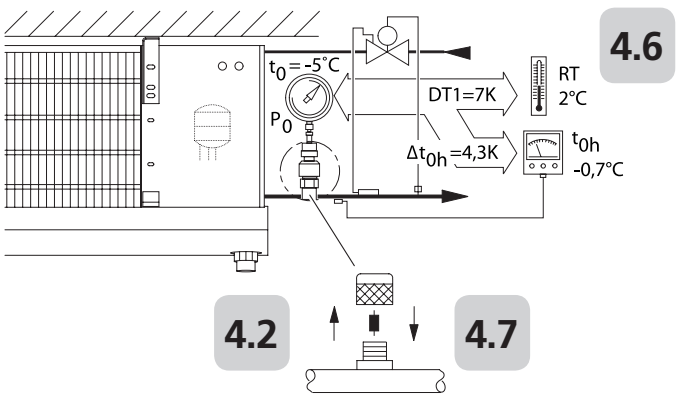

$\Delta t_{0h} \cong 0.5 \ldots 0.7 \times DT1$

DT1 10K ≅ Δt_{0h} 6.1 K
DT1 9K ≅ Δt_{0h} 5.5 K
DT1 8K ≅ Δt_{0h} 4.9 K
DT1 7K ≅ Δt_{0h} 4.3 K
DT1 6K ≅ Δt_{0h} 3.7 K
DT1 5K ≅ Δt_{0h} 3.1 K
DT1 4K ≅ Δt_{0h} 2.5 K

DZA(E) DZB(E) DZK(E)	mm	mm
40-F41	10	28
40-F61	10	28
45-F41	10	28
45-F61	10	28
50-F61	10	35
50-F81	15	35
56-F61	15	35
56-F81	15	35
40-F42	10	28
40-F62	10	35
45-F42	10	35
45-F62	15	35
50-F62	22	35
50-F82	22	42
56-F62	22	42
56-F82	22	42
40-F43	10	35
40-F63	15	35
45-F43	15	35
45-F63	22	42
50-F63	22	42
50-F83	22	42
56-F63	22	54
56-F83	2x22	2x42
40-F44	15	35
40-F64	22	35
45-F44	15	42
45-F64	22	42
50-F64	28	54
50-F84	2x22	2x42
56-F64	28	54
56-F84	2x22	2x42

Electrical wiring

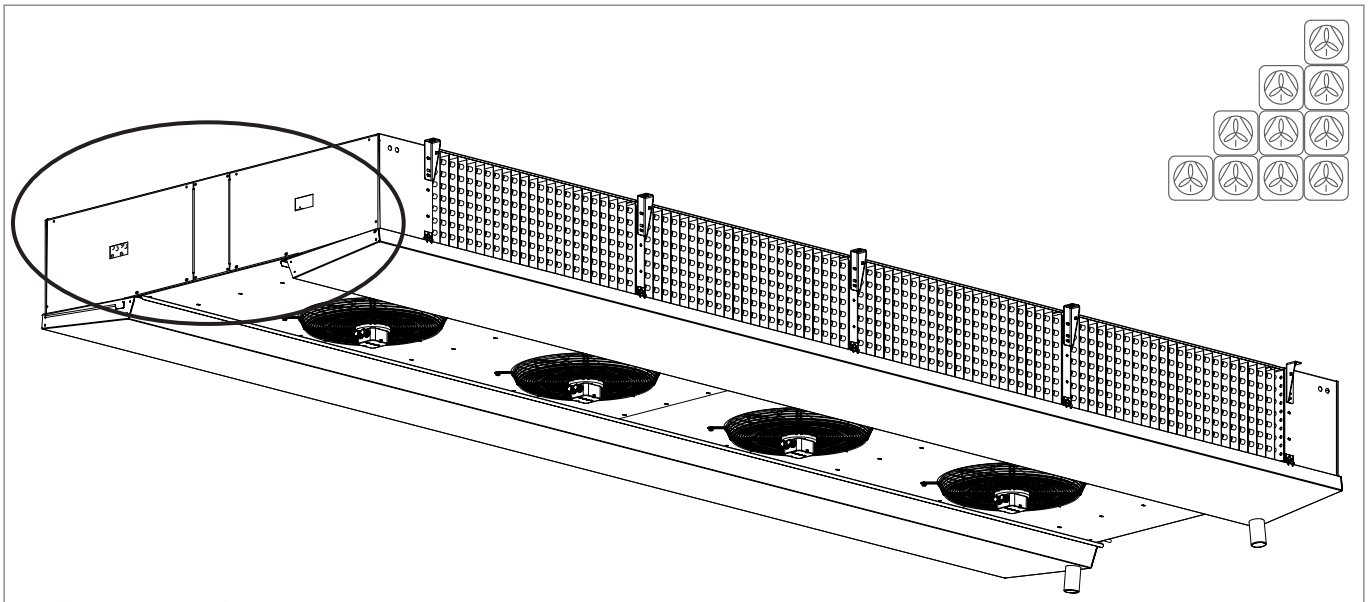

Küba DZ *production*

Motor

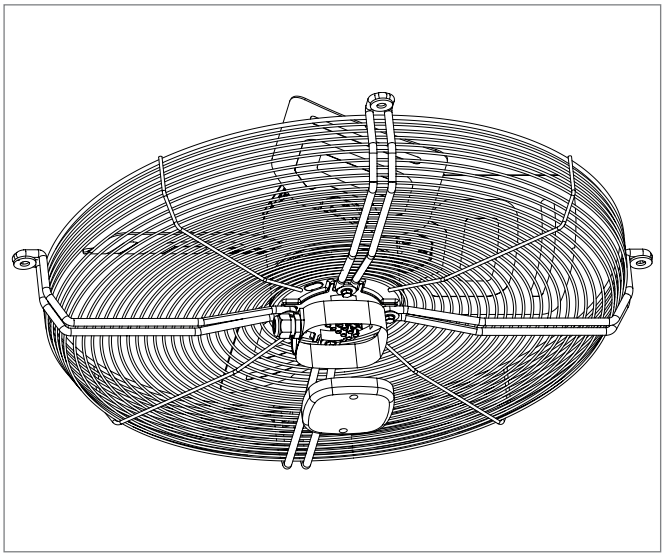

Electrical defrost

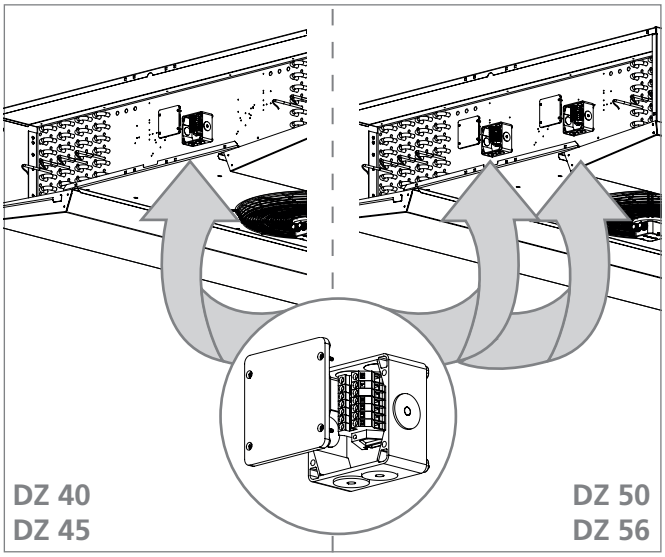

DZ *production*

Motor wiring diagram

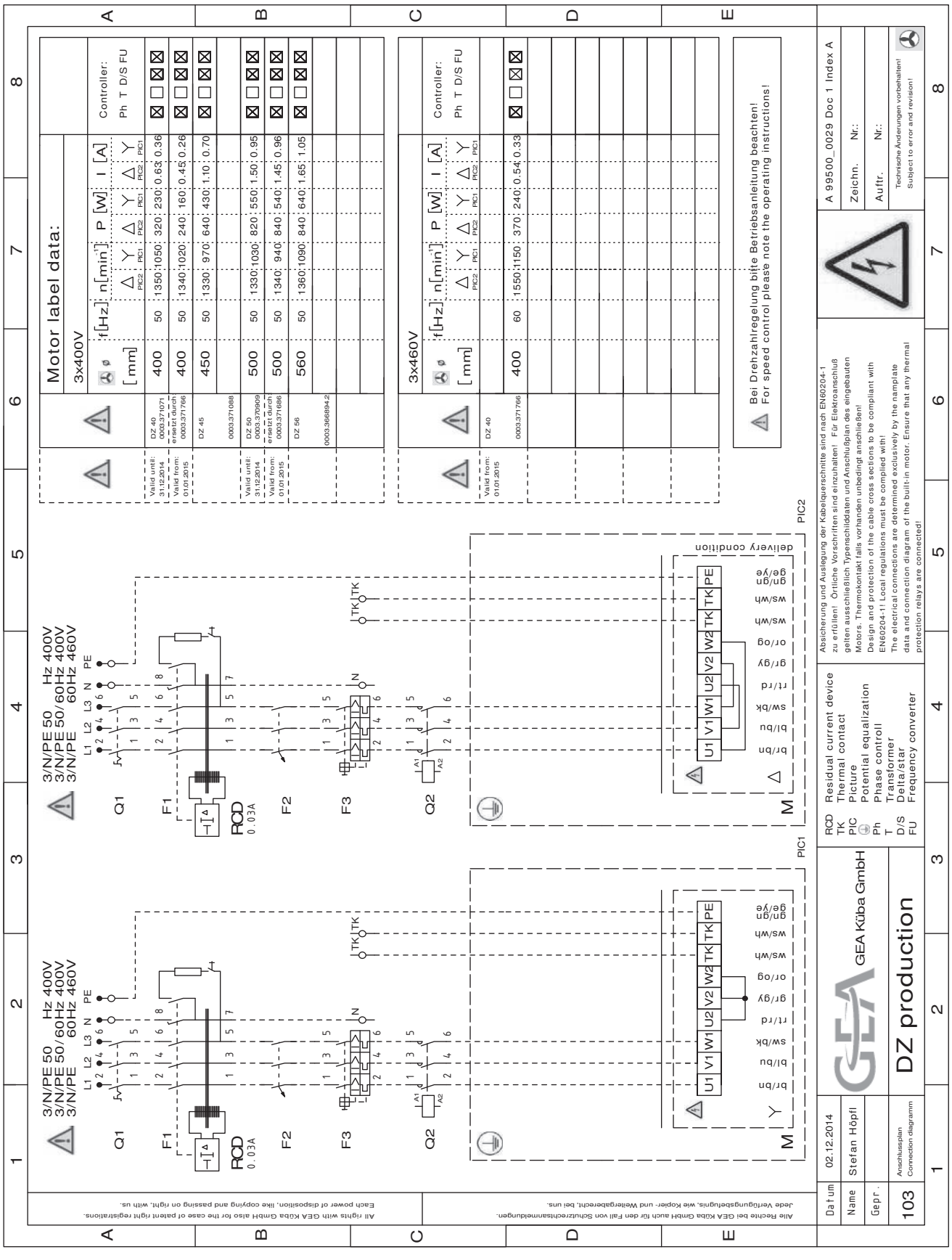

Electrical defrost wiring diagram

PIC 1

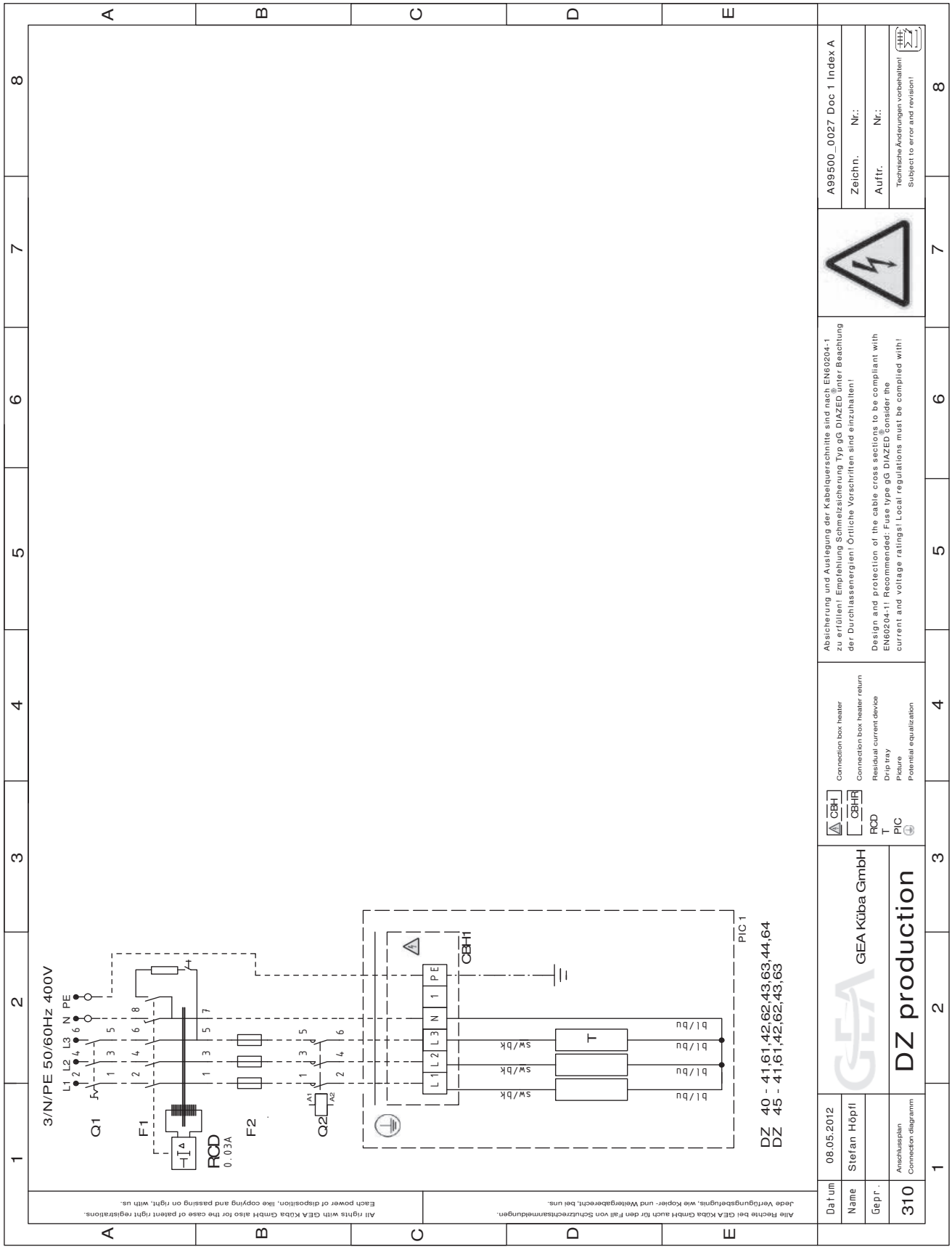

Electrical defrost wiring diagram

PIC 2

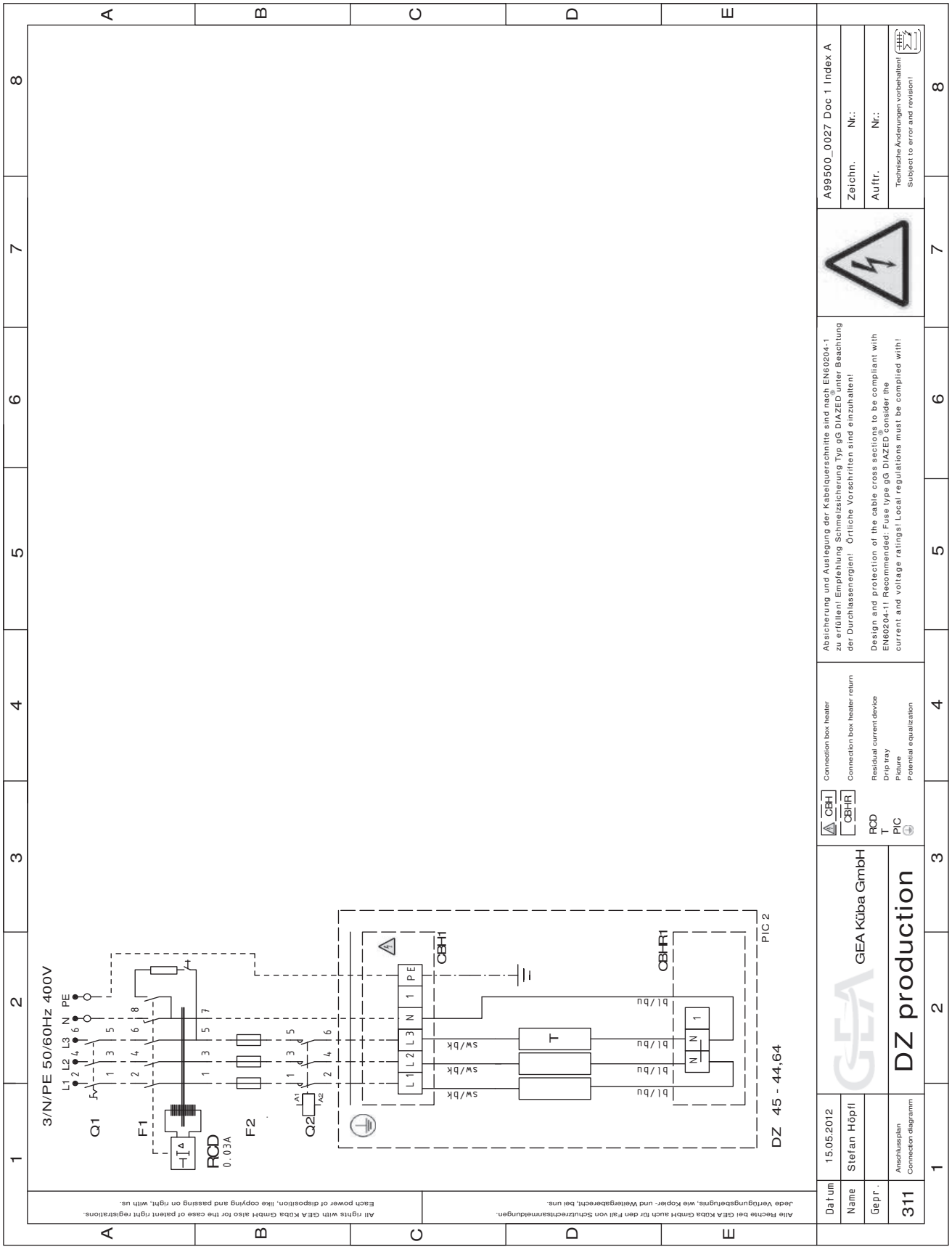

Electrical defrost wiring diagram

PIC 3

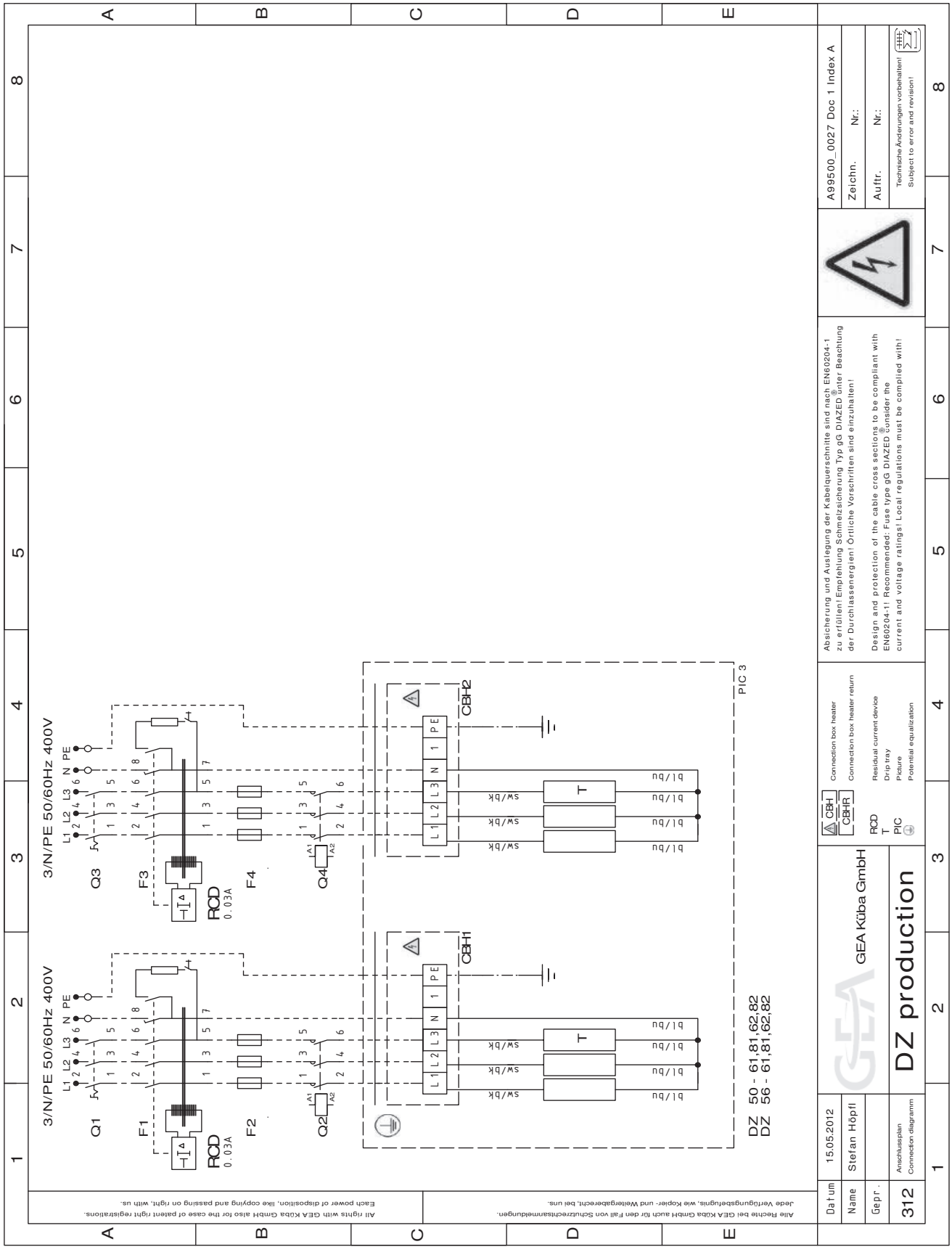

Electrical defrost wiring diagram

PIC 4

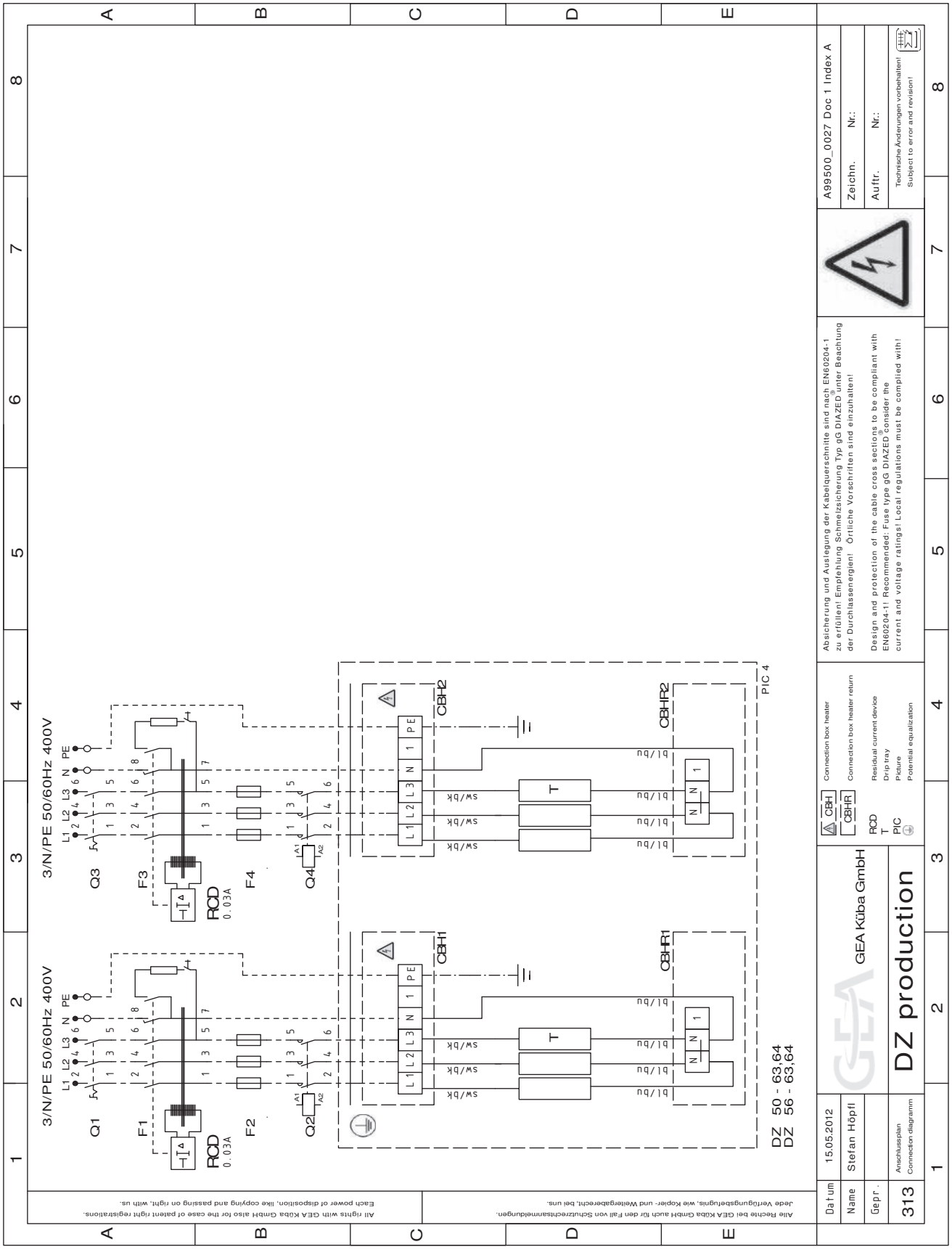

Electrical defrost wiring diagram

PIC 5

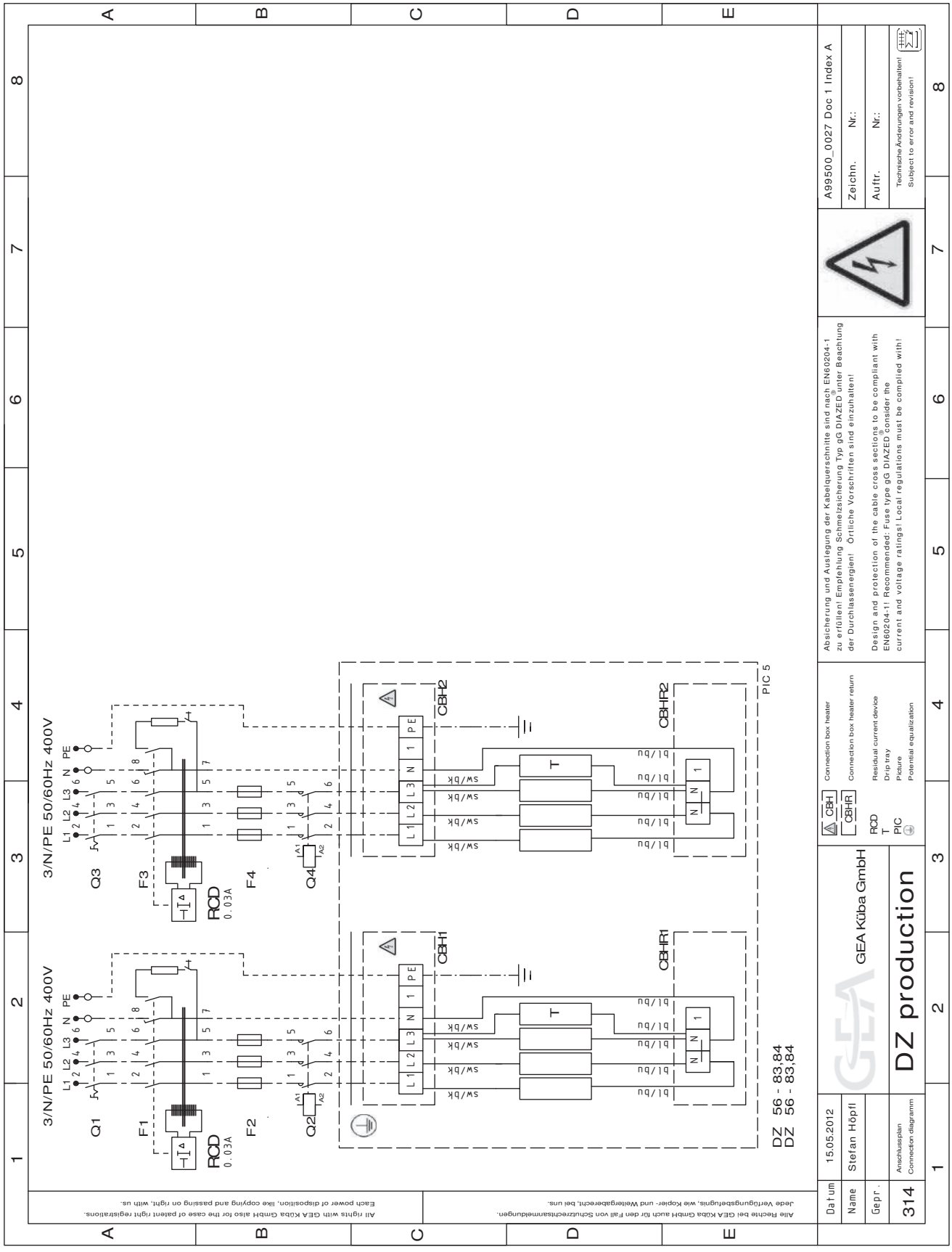

Cabling

DZ *production*

Standard/Series **Wiring diagram number: A99500_0027** (Doc 2; Index A)															
Type		Coil heating element				Drip tray heating element (D)								L1	
DZAE DZBE DZKE DZLE	Finned length	Number of	Length	Capacity P	Form	Number of	Length	Capacity P	Form	Total capacity of all heating circuits	Total number of all heating circuits	Heating circuit no.	**PIC on the wiring diagram**	Number of heating elements, coil	Number of heating elements, drip tray D	Number of heating elements, drip tray D (R)
Type	L [mm]	[pcs]	L [mm]	P [W]		TW [pcs]	L [mm]	P [W]		P [kW]	[pcs]	[Nb]		[pcs]	[pcs]	[pcs]
DZAE DZBE DZKE DZLE	Finned length															
40-41	600	4	1700	615	U100	2	1900	690	Q210	3.8	1	CBH1	1	2		
40-61	600	4	1700	615	U150	2	1900	690	Q210	3.8	1	CBH1	1	2		
40-42	1200	4	2900	1070	U100	2	3100	1145	Q210	6.6	1	CBH1	1	2		
40-62	1200	4	2900	1070	U150	2	3100	1145	Q210	6.6	1	CBH1	1	2		
40-43	1800	4	4250	1590	U100	2	4250	1590	Q210	9.5	1	CBH1	1	2		
40-63	1800	4	4250	1590	U150	2	4250	1590	Q210	9.5	1	CBH1	1	2		
40-44	2400	4	5200	1950	U100	2	5500	2000	Q210	11.8	1	CBH1	1	2		
40-64	2400	4	5200	1950	U100	2	5500	2000	Q210	11.8	1	CBH1	1	2		

	CBH connection box Heater Heating circuit												CBHR connection box Heater return Heating circuit return			
	L2			L3												
	Number of heating elements, coil	Number of heating elements, drip tray D	Number of heating elements, drip tray D (R)	Number of heating elements, coil	Number of heating elements, drip tray D	Number of heating elements, drip tray D (R)	Total capacity of heating circuit P	Current L1	Current L2	Current L3	Recom-mended cable cross-section for supply line (building-side)	SKS	Junction box conn. box with earth-ing cable	Heating circuit no.	Junction box connection box	Minimum cable cross-section for return	Cable length for parts list
	[pcs]	[pcs]	[pcs]	[pcs]	[pcs]	[pcs]	P [kW]	I [A]	I [A]	I [A]	min [mm²]	[size]	CBH	[Nb]	CBHR	min [mm²]	[m]
												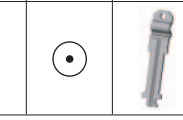					
2				2 T		3.8	5.3	5.3	6.0	2.50	4	WK 100				
2				2 T		3.8	5.3	5.3	6.0	2.50	4	WK 100				
2				2 T		6.6	9.3	9.3	10.0	2.50	4	WK 100				
2				2 T		6.6	9.3	9.3	10.0	2.50	4	WK 100				
2				2 T		9.5	13.8	13.8	13.8	2.50	4	WK 100				
2				2 T		9.5	13.8	13.8	13.8	2.50	4	WK 100				
2				2 T		11.8	17.0	17.0	17.4	2.50	4	WK 100				
2				2 T		11.8	17.0	17.0	17.4	2.50	3	WK 100				

Cabling

DZ *production*

Standard/Series **Wiring diagram number: A99500_0027** (Doc 2; Index A)																
Type		Coil heating element				Drip tray heating element (D)									L1	
DZAE DZBE DZKE DZLE	Finned length	Number	Length	Capacity P	Form	Number	Length	Capacity P	Form	Total capacity of all heating circuits	Total number of all heating circuits	Heating circuit no.	**PIC on the wiring diagram**	Number of heating elements, coil	Number of heating elements, drip tray D	Number of heating elements, drip tray D (R)
Type	L [mm]	[pcs]	L [mm]	P [W]		TW [pcs]	L [mm]	P [W]		P [kW]	[pcs]	[Nb]		[pcs]	[pcs]	[pcs]
DZAE DZBE DZKE DZLE	Finned length															
45-41	800	4	2100	765	U100	2	2250	860	Q210	4.8	1	CBH1	1	2		
45-61	800	4	2100	765	U150	2	2250	860	Q210	4.8	1	CBH1	1	2		
45-42	1600	4	3650	1360	U100	2	3850	1435	Q210	8.3	1	CBH1	1	2		
45-62	1600	4	3650	1360	U150	2	3850	1435	Q210	8.3	1	CBH1	1	2		
45-43	2400	4	5200	1950	U100	2	5500	2000	Q210	11.8	1	CBH1	1	2		
45-63	2400	4	5200	1950	U150	2	5500	2000	Q210	11.8	1	CBH1	1	2		
45-44	3200	8	3500	1300	Z95/95	4	3500	1300	L95	15.6	1	CBH1	2	4		
45-64	3200	8	3500	1300	Z95/95	4	3500	1300	L95	15.6	1	CBH1	2	4		

	CBH connection box Heater Heating circuit												CBHR connection box Heater return Heating circuit return			
L2			L3													
Number of heating elements, coil	Number of heating elements, drip tray D	Number of heating elements, drip tray D (R)	Number of heating elements, coil	Number of heating elements, drip tray D	Number of heating elements, drip tray D (R)	Total capacity of heating circuit P	Current L1	Current L2	Current L3	Recom-mended cable cross-section for supply line (building-side)	SKS	Junction box Conn. Box with earth-ing cable	Heating circuit no.	Junction box connection box	Minimum cable cross-section for return	Cable length for parts list
[pcs]	[pcs]	[pcs]	[pcs]	[pcs]	[pcs]	P [kW]	I [A]	I [A]	I [A]	min [mm²]	[Size]	CBH	[Nb]	CBHR	min [mm²]	[m]
2				2 T		4.8	6.7	6.7	7.5	2.50	4	WK 100				
2				2 T		4.8	6.7	6.7	7.5	2.50	4	WK 100				
2				2 T		8.3	11.8	11.8	12.5	2.50	4	WK 100				
2				2 T		8.3	11.8	11.8	12.5	2.50	4	WK 100				
2				2 T		11.8	17.0	17.0	17.4	2.50	1	WK 100				
2				2 T		11.8	17.0	17.0	17.4	2.50	1	WK 100				
4				4 D		15.6	22.6	22.6	22.6	2.50	4	WK 100	CBHR1	WK 100	2.5	4.35
4				4 D		15.6	22.6	22.6	22.6	2.50	4	WK 100	CBHR1	WK 100	2.5	4.35

Cabling

DZ *production*

Standard/Series **Wiring diagram number: A99500_0027** (Doc 2; Index A)																	
Type		Coil heating element				Drip tray heating element (D)									L1		
DZAE DZBE DZKE DZLE	Finned length	Number	Length	Capacity P	Form	Number	Length	Capacity P	Form	Total capacity of all heating circuits	Total number of all heating circuits	Heating circuit no.	**PIC on the wiring diagram**	Number of heating elements, coil	Number of heating elements, drip tray D	Number of heating elements, drip tray D (R)
Type	L [mm]	[pcs]	L [mm]	P [W]		TW [pcs]	L [mm]	P [W]		P [kW]	[pcs]	[Nb]		[pcs]	[pcs]	[pcs]
DZAE DZBE DZKE DZLE	Finned length															
50-61	1000	6	2600	955	U150	2	3100	1145	Q250	8.0	2	CBH1	3	2		
												CBH2	3	1		
50-81	1000	8	2600	955	U200	2	3100	1145	Q250	9.9	2	CBH1	3	2		
												CBH2	3	2		
50-62	2000	6	4600	1720	U150	2	5000	1875	Q250	14.1	2	CBH1	3	2		
												CBH2	3	1		
50-82	2000	8	4600	1720	U200	2	5000	1875	Q250	17.5	2	CBH1	3	2		
												CBH2	3	2		
50-63	3000	12	3250	1210	L100	4	3500	1300	L150	19.7	2	CBH1	4	3		
												CBH2	4	3		
50-83	3000	16	3250	1210	L100	4	3500	1300	L150	24.6	2	CBH1	5	4		
												CBH2	5	3		
50-64	4000	12	4500	1685	Z95/95	4	4600	1720	L250	27.1	2	CBH1	4	3		
												CBH2	4	3		
50-84	4000	16	4500	1685	Z95/95	4	4600	1720	L250	33.8	2	CBH1	5	4		
												CBH2	5	3		

	CBH connection box Heater Heating circuit												CBHR connection box Heater return Heating circuit return			
L2			L3													
Number of heating elements, coil	Number of heating elements, drip tray D	Number of heating elements, drip tray D (R)	Number of heating elements, coil	Number of heating elements, drip tray D	Number of heating elements, drip tray D (R)	Total Capacity of heating circuit P	Current L1	Current L2	Current L3	Recom-mended cable cross-section for supply line (building-side)	SKS	Junction box Conn. Box with earth-ing cable	heating circuit no.	Junction box connection box	Minimum cable cross-section for return	Cable length for parts list
[pcs]	[pcs]	[pcs]	[pcs]	[pcs]	[pcs]	P [kW]	I [A]	I [A]	I [A]	min [mm²]	[Size]	CBH	[Nb]	CBHR	min [mm²]	[m]
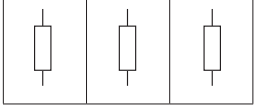																
1				1 T		4.0	8.3	4.2	5.0	2.50	4	WK 100				
2				1 T		4.0	4.2	8.3	5.0	2.50	4	WK 100				
2				1 T		5.0	8.3	8.3	5.0	2.50	4	WK 100				
2				1 T		5.0	8.3	8.3	5.0	2.50	4	WK 100				
1				1 T		7.0	15.0	7.5	8.2	2.50	4	WK 100				
2				1 T		7.0	7.5	15.0	8.2	2.50	4	WK 100				
2				1 T		8.8	15.0	15.0	8.2	2.50	4	WK 100				
2				1 T		8.8	15.0	15.0	8.2	2.50	4	WK 100				
3				2 T		9.9	15.8	15.8	11.3	2.50	4	WK 100	CBHR1	WK 100	2.5	4.15
3				2 T		9.9	15.8	15.8	11.3	2.50	4	WK 100	CBHR2	WK 100	2.5	4.15
3			1	2 T		12.3	21.0	15.8	16.6	2.50	4	WK 100	CBHR1	WK 100	2.5	4.15
4			1	2 T		12.3	15.8	21.0	16.6	2.50	4	WK 100	CBHR2	WK 100	2.5	4.15
3				2 T		13.6	22.0	22.0	15.0	2.50	4	WK 100	CBHR1	WK 100	2.5	5.15
3				2 T		13.6	22.0	22.0	15.0	2.50	4	WK 100	CBHR2	WK 100	2.5	5.15
3			1	2 T		16.9	29.3	22.0	22.3	4.00	4	WK 100	CBHR1	WK 100	4.0	5.15
4			1	2 T		16.9	22.0	29.3	22.3	4.00	4	WK 100	CBHR2	WK 100	4.0	5.15

Cabling

DZ *production*

Standard/Series **Wiring diagram number: A99500_0027** (Doc 2; Index A)																	
Type		Coil heating element				Drip tray heating element (D)							**PIC** **on the wiring diagram**	**L1**		
DZAE DZBE DZKE DZLE	Finned length	Number	Length	Capacity P	Form	Number	Length	Capacity P	Form	Total Capacity of all heating circuits	Total number of all heating circuits	Heating circuit no.		Number of heating elements, coil	Number of heating elements, drip tray D	Number of heating elements, drip tray D (R)
Type	L [mm]	[pcs]	L [mm]	P [W]		TW [pcs]	L [mm]	P [W]		P [kW]	[pcs]	[Nb]		[pcs]	[pcs]	[pcs]
DZAE DZBE DZKE DZLE	Finned length															
56-61	1200	6	3100	1145	U150	2	3500	1300	Q250	9.5	2	CBH1	3	2		
												CBH2	3	1		
56-81	1200	8	3100	1145	U200	2	3500	1300	Q250	11.8	2	CBH1	3	2		
												CBH2	3	2		
56-62	2400	6	5500	2000	U150	2	5820	2165	Q250	16.3	2	CBH1	3	2		
												CBH2	3	1		
56-82	2400	8	5500	2000	U200	2	5820	2165	Q250	20,3	2	CBH1	3	2		
												CBH2	3	2		
56-63	3600	12	3850	1435	L100	4	4250	1590	L250	23.6	2	CBH1	4	3		
												CBH2	4	3		
56-83	3600	16	3850	1435	L100	4	4250	1590	L250	29.3	2	CBH1	5	4		
												CBH2	5	3		
56-64	4800	12	5200	1950	Z95/95	4	5500	2000	L300	31.4	2	CBH1	4	3		
												CBH2	4	3		
56-84	4800	16	5200	1950	Z95/95	4	5500	2000	L300	39.2	2	CBH1	5	4		
												CBH2	5	3		

	CBH connection box Heater Heating circuit												CBHR connection box Heater return Heating circuit return			
	L2			L3												
	Number of heating elements, coil	Number of heating elements, drip tray D	Number of heating elements, drip tray D (R)	Number of heating elements, coil	Number of heating elements, drip tray D	Number of heating elements, drip tray D (R)	Total capacity of heating circuit P	Current L1	Current L2	Current L3	Recom-mended cable cross-section for supply line (building-side)	SKS	Junction box Conn. Box with earth-ing cable	Heating circuit no.	Junction box connection box	Minimum cable cross-section for return	Cable length for parts list
	[pcs]	[pcs]	[pcs]	[pcs]	[pcs]	[pcs]	P [kW]	I [A]	I [A]	I [A]	min [mm²]	[Size]	CBH	[Nb]	CBHR	min [mm²]	[m]
																	
1				1 T		4.7	10.0	5.0	5.7	2.50	4	WK 100				
2				1 T		4.7	5.0	10.0	5.7	2.50	4	WK 100				
2				1 T		5.9	10.0	10.0	5.7	2.50	4	WK 100				
2				1 T		5.9	10.0	10.0	5.7	2.50	4	WK 100				
1				1 T		8.2	17.4	8.7	9.4	2.50	4	WK 100				
2				1 T		8.2	8.7	17.4	9.4	2.50	4	WK 100				
2				1 T		10.2	17.4	17.4	9.4	2.50	4	WK 100				
2				1 T		10.2	17.4	174	9.4	2.50	4	WK 100				
3				2 T		11.8	18.7	18.7	13.8	2.50	4	WK 100	CBHR1	WK 100	2.5	4.75
3				2 T		11.8	18.7	18.7	13.8	2.50	4	WK 100	CBHR2	WK 100	2.5	4.75
3			1	2 T		14.7	25.0	18.7	20.1	2.50	4	WK 100	CBHR1	WK 100	2.5	4.75
4			1	2 T		14.7	18.7	25.0	20.1	2.50	4	WK 100	CBHR2	WK 100	2.5	4.75
3				2 T		15.7	25.4	25.4	17.4	4.00	4	WK 100	CBHR1	WK 100	4.0	5.95
3				2 T		15.7	25.4	25.4	17.4	4.00	4	WK 100	CBHR2	WK 100	4.0	5.95
3			1	2 T		19.6	33.9	25.4	25.9	4.00	4	WK 100	CBHR1	WK 100	4.0	5.95
4			1	2 T		19.6	25.4	33.9	25.9	4.00	4	WK 100	CBHR2	WK 100	4.0	5.95

Küba GmbH

Kühler Weg 1 · 82065 Baierbrunn · Germany
Tel.: +49 89/744 73-0 · Fax: +49 89/744 73-107
kueba@gea.com · www.kueba.com

© Copyright 2014 Küba GmbH · 0001.392262.1 · Status 12/2014
Technical modifications reserved