A2 DO NOT SCALE THIRD ANGLE PROJECTION IF IN DOUBT ASK

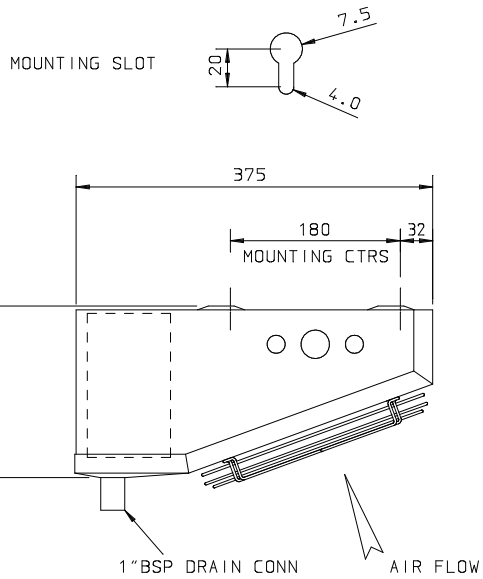

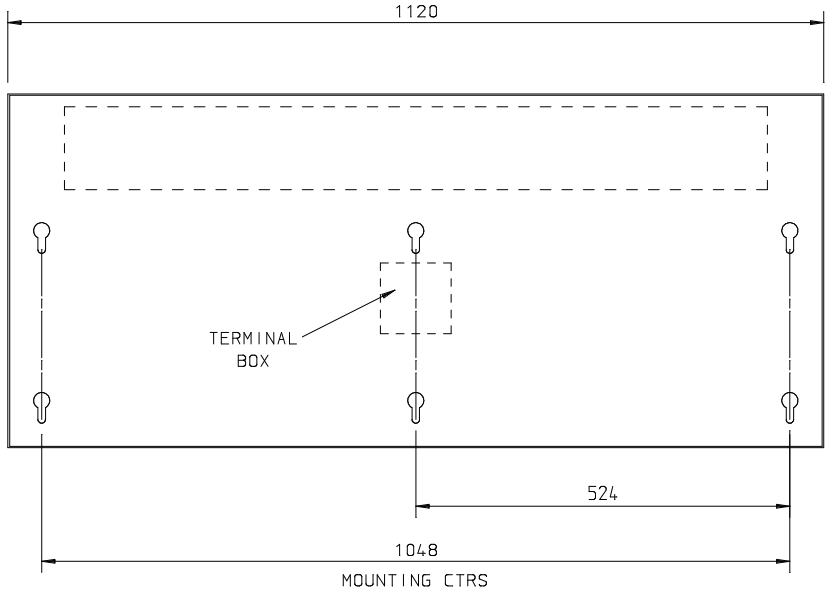

CONNECTIONS
THIS END

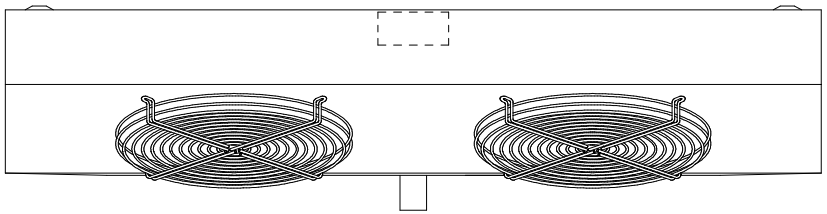

MODEL	CONNECTIONS				WEIGHT
	INLET		OUTLET		
TG5	3/8"	10MM	1/2"	12MM	16.4KG

ISS	MODIFICATION	SCN	DATE

TOLERANCES ASSEMBLY UNLESS OTHERWISE STATED
SIMPLE ASSY'S (2 to 3 Parts) ±1.0mm
COMPLEX ASSY'S (Multiple Parts) ±3.0mm

MATERIAL

FINISH WHITE GLOSS

GEA Searle

DATE 12/11/12 SCALE 1:4

PART SALES OUTLINE TEC5-7

PART No.

ISS 01

DRAWN MK CHECKED MK

FOR N/A

JOB No. N/A

DRG. FILE REF TEC5-7.01