Searle

GEA Searle - RF-SJ Refrigeration Flatbed

General infomation - The Searle RF-SJ - Refrigeration Flatbed is part of the RF range. Developed to replace the popular ME condenser this product has been optimised for the capacity range between the MSA and the larger RF condenser. The RF-SJ reflects features from both product ranges, such as profiled side plates and versatile leg arrangements and is available as a Dry cooler and Gas cooler. The highly efficient EL-Fin has been configured for the condensers and dry coolers within the range to achieve optimised thermal performance within a given footprint. Selection can be performed by using our selection software which can be downloaded from our website **www.searle.co.uk**

Capacities - 9 - 165kW

Fin material	Description
CU/AL	Copper tube/Aluminium fin
CU/AV	Copper tube/Epoxy coated Aluminium fin
CU/BG	Copper tube/Aluminium fin Blygold coated
CU/MB	Copper tube/Aluminium Magnesium fin Blygold coated
CU/AM	Copper tube/Aluminium Magnesium fin standard
CU/CU	Copper tube/Copper fin
CU/ET	Copper tube/Copper fin Electro tinned

Coil - The RF-SJ range utilises the EL-Fin configuration for most applications. Standard EL (12FPI) incorporates $^{3}/_{8}$"(9.5mm) tube diameter on an equilateral spacing achieveing a good balance of reduced refrigerant charge whilst maintaining appropriate thermal load to achieve good system stability. The coil is fully supported, through its length and depth, by tube sheets and internal fan baffles secured to the continuous one piece side plates. The coil tubes are also supported on Aluminium or Copper insert plates secured to the tube sheets and fan baffles.

Casework - The casework is designed to maximise strength whilst reducing the number of components. Each side plate is cold formed from a single piece of pre-galvanised sheet steel and powder coated RAL7032 (Pebble Grey) on the outside. The legs can be removed to enable easy stocking and delivery.

Options	Description
AC Fan Control	Direct mount, phase cut AC control option (Triac)
EC Fan Control	Low cost and easy to use 0-10V EC control
Isolators	Fan Isolators
Alternative Fin Materials	Epoxy coated aluminium, copper, Blygold, electro-tinned
Sub-Cooling	Built in sub-cooling upon request
Model option	LF-SJ or OF-SJ all available in these sizes

Fans - Searle offer either AC or EC fans supplied by EBM Papst available in a 630mm diameter with a choice of 4, 6, 8 pole with 1 or 3 phase options available.



Controls - Basic options on these ranges are:

- AC Conrtol - Direct mount, phase cut AC control option (Triac)
- EC Control - Competitive and easy to use 0-10V EC control

All the above options are available with fan mounted isolators

Features

- Eurovent approved performance tested to EN 327 and EN13487
- Manufactured to Quality Standard ISO9001:2008
- Profiled side channel for increased strength
- Galvanised steel case and legs
- Standard fin spacing 2.1mm
- Powder coated RAL 7032 grey
- Standard Copper (CU) tube, Aluminium-Magnesium (ALMG) fins
- Copper inlet and outlet headers
- Pressure tested and sealed
- AC and EC fans offered as standard
- 'Pallet' sized units to optimise customers storage space
- Units stacked to reduce transport costs
- Minimal unit size options to enable easy stocking and delivery

Certification - RF-SJ models are "Eurovent Certify All"certified. Searle is a quality assured company to ISO 9001: encompassing Performance Testing, Manufacturing Systems and Inspection Procedures. Searle's products are also CE marked.

Selection software - Selection and pricing can be performed on the Searle Selection software which can be downloaded from our website **www.searle.co.uk**

EUROVENT CERTIFIED PERFORMANCE www.eurovent-certification.com

BSI REGISTERED UKAS QUALITY MANAGEMENT 003

CE

Dimension drawings

	Module Length

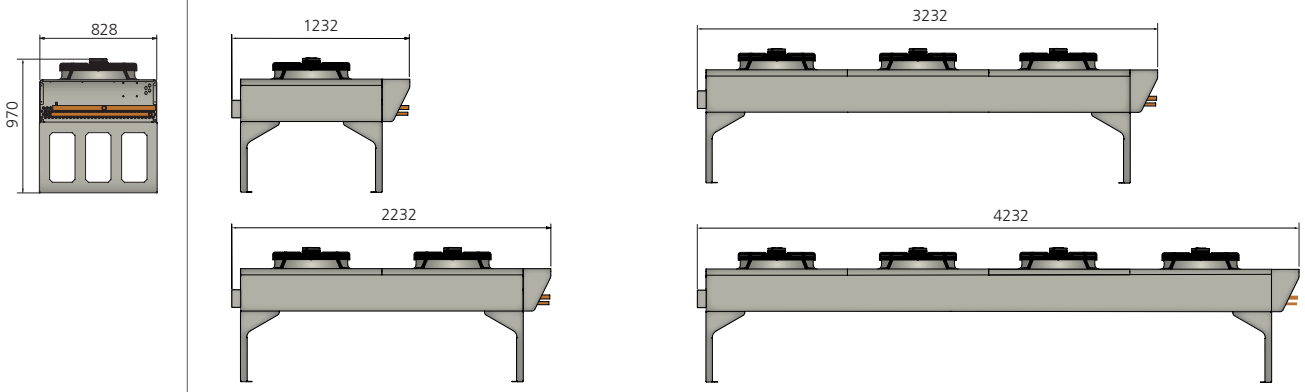

Nomenclature

R	F	-	S	J	1	01	L	2	H	-	063	N	04	D

Product series:	**R** = Refrigerant
Unit form:	**F** = Flatbed
Module width:	**S** = Nominal
Module length:	**J** = 1000mm
Fan rows:	1
Fans per row:	1 - 4
Fin type:	**EL** = $^{3}/_{8}$" (9.5mm) tube, **G** = Gas cooler
Coil rows:	2, 3, 4, 5, 6
Orientation:	**H** = Horizontal, **V** = Vertical
Fan Diameter:	**063** = 630mm
Fan type:	**N** = AC Normal, **H** = AC high power, **M** = EC high power, **L** = EC low power
Speed options:	**1Ph: 6** pole, **EC** High and Low power
	3Ph: **4,6,8** pole, **EC** High power
Motor wiring:	Delta, Star

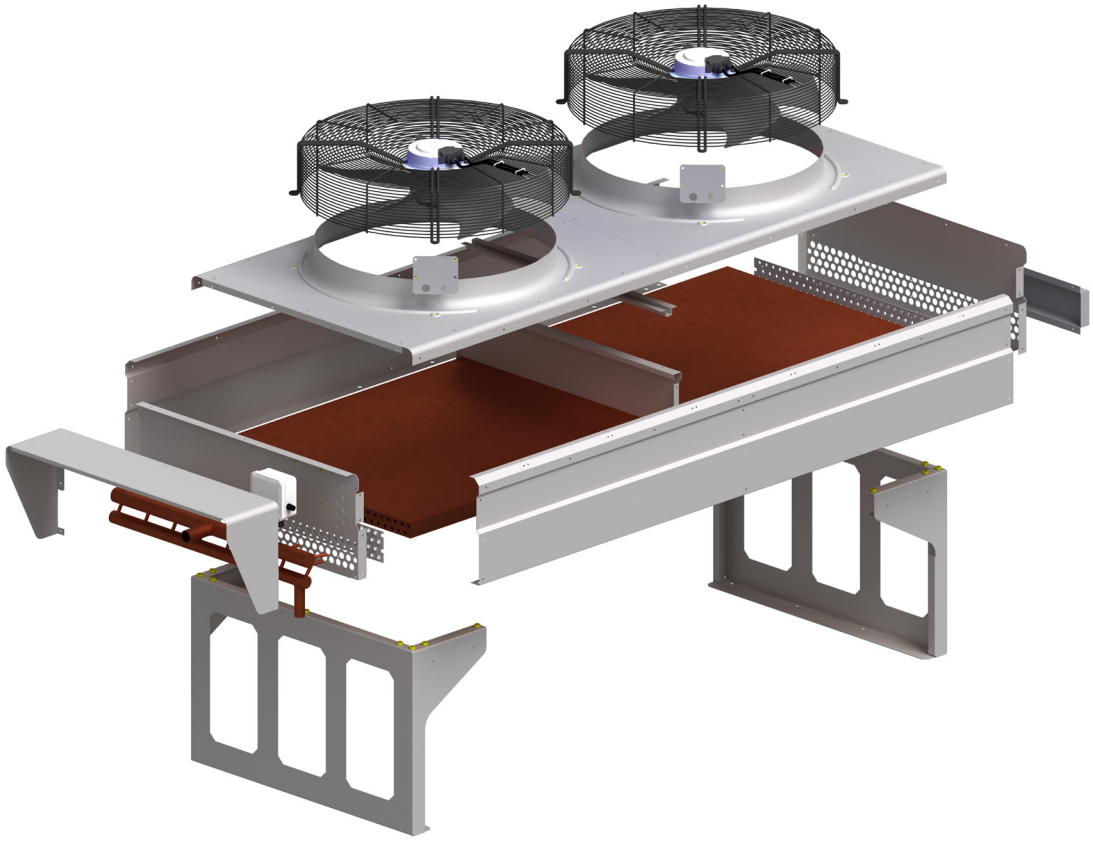

GEA Heat Exchangers

Searle

20 Davis Way, Newgate Lane, Fareham, Hampshire, United Kingdom
Phone: +44 (0) 1329 823344, Web: www.searle.co.uk

© Searle reserve the right to change in whole or part the specification detail.