

Goedhart ZFB / ZFZ

Industrial air coolers for cooling & freezing applications
FeZn

NH_3

engineering for a better world

GEA Heat Exchangers



Goedhart ZFB/ZFZ

The range Goedhart ZFB/ZFZ single discharge ceiling mounted industrial air coolers consists of 406 types with capacities between 2,8 and 72,7 kW. The Goedhart ZFB/ZFZ air coolers are suitable for cooling and freezing applications and with a wide variety of accessories and options available. The coil block is standard build from steel end plates, tubes and fins and will be hot dipped galvanzed totally. The fans are arranged for blow-through air configuration for the Goedhart ZFB and draw-through for the Goedhart ZFZ (please state which is required when ordering).. The modular design incorporates 5 different sizes of fan, with model options of up to 4 fans per cooler

Type-description

ZFB 63457

- B=Blow-through / Z=Draw-through
- Number of rows deep
- Number of fans
- Fin spacing
- Fan diameter in cm

Coil block

- Tube pitch : 60x60 mm straight
- Fin spacings : 6, 8, 10 and 12 mm
- Material : 22mm o.d steel tubes
- : heavy-gauge steel fins
  The coil will be hot dipped galvanized
- Optimized cooling circuits
- Standard refrigerant connections are positioned on the left hand side of the unit when looking with the direction of the airflow.
- All coolers are pressure tested to 30 bar (lower by cooling mediums) and are supplied with a light over pressure charge of dry nitrogen.
- Standard the air coolers are suitable for NH_3- pumpcirculation (ratio 2/4) and coolants.

Casing

- Construction for ceiling mounting
- The flush mounting protects against and prevents accumulation of dust and dirt.
- Casing material of galvanized sheet steel
- Standard the casing is not spray painted
- Bend/header protection by end covers, easy removed for maintenance
- Defrost by hot gas spiral or electric defrost elements will be fixed to the bottom side of the coil.
- Stainless steel fasteners.

General range features

Capacity

The listed nominal cooling capacities are are based on NH_3 pump system, DT1, a RH of 85% with a frost layer of 0.2mm and 4 pole 3 phase fans connected in Δ.

Capacity optimisation
Since Goedhart tries to limit stock products, we are capable of optimising the circuitry of our evaporators. In order to do this, the following information is needed :

- Design capacity
- Air volume
- Refrigerant
- Air on temperature
- Evaporating temperature
- Liquid temperature before expansion valve.

Sound data

The mean sound pressure (LpA @ 3m ± 2 dB (A)) each air cooler is a calculated indication value according to the EN13487 standard parallel pipe. Goedhart uses the fan manufacturer's sound power level (LwA) at the inlet side of the fan. Changes to or by the fan or the product, affect the sound, in these cases, consult the manufacturer for the new indication value. In critical sound requirements, we advise you to consult an expert.

Defrostsystem:

For room temperatures where ice build-up can be expected and where the coilblock can not be defrosted by the room air, electric or hotgas defrost is necessary.
With low temperatures we also advise fan periphery heating.

Electrical defrost:
The Goedhart ZFB and ZFZ can be provided with electric defrost. A distinction can be made here between heavy defrost loads for low temperatures and light defrost load for higher temperatures (room temperature approximately 0 °C).
The stainless steel heater elements are fitted in the coilblock in tubes, which forms a high conductive medium between the heaters and the fins. The driptray heaters are fitted to the underside of the aluminium inner tray with aluminium profiles.The heater elements which are rated for 220/240 V are connected for supply 380/415 V with neutral. The coilblock elements are removable from the end opposite to the refrigerant connections, whilst the tray heater elements can be removed once the outer tray has been taken off.

Hotgas defrost:
The coilblock can be made suitable for hotgas. At an extra price the driptray can be provided with a hotgas/cooling medium spiral. The stainless steel tubes of the hotgas spiral are enclosed in special aluminium profiles that are rigidly secured to the underside of the aluminium inner tray, thus providing a good bond for maximum heat transfer.Just as with electric defrost a distinction is made with hotgas defrost between light defrost load (room temperature about 0°C) and heavy defrost load.

Accessories:

Standard accessories for the Goedhart ZFB/ZFZ air coolers are:
- Electric, hotgas and/or water defrost system.
- Fan periphery heating.
- Insulation within the driptray.
- Insulated hygienic polyester driptray.
- Goedhart ZFZ supplied with bellmouth connection per fan for a longer air throw
- Goedhart ZFB supplied with air diffusor for a longer air throw
- Goedhart ZFB supplied with air diffusor with air operated damper to increase defrost efficiency (airvolume reduced to approx. 90% and capacity reduced to approx. 95%)
- Hinged drip tray.

The accessories are included in the price list.

Optional extras:

Various optional extras for the ZFB/ZFZ are available, price and delivery upon request:
- Insulation discs
- Feet for floor mounting
- Fan hood
- 60 Hz motors
- EC-fans
- Single phase motors
- Glycol/water/etc. cooling mediums
- NH3 dx, R22 dx/pumpsystem.
- Other casing materials
- Other fin spacings

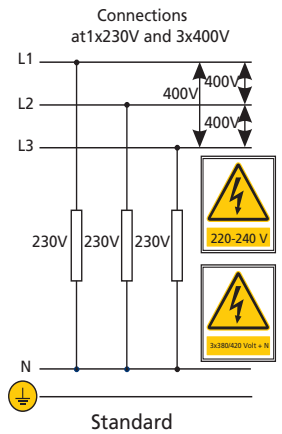

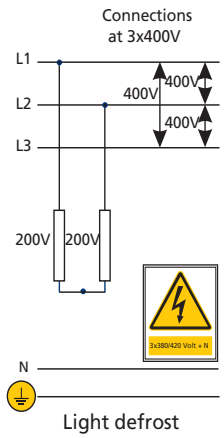

Mounting and Maintenance

Goedhart ZFB/ZFZ is delivered on a wooden frame. When on the frame, Goedhart ZFB/ZFZ can be handled by forklift truck, which makes positioning and installation simple. Refer to our maintenance and installation manual..





Fans

Because of the flexible construction of the Goedhart ZFB/ZFZ air cooler, in principle it is possible to deliver with different fans. GEA Goedhart selected a standard fan range of Ziehl Abegg (we reserve the right to alter the manufacturer) which fit perfectly on the Goedhart ZFB/ZFZ air coolers. The fans can be supplied in both blow-through and draw-through executions. Against an extra price and with extra delivery times stainless steel guards and EC-fans are available.

Execution

The fans meet the ErP directive. The fans have very good aerodynamic features because of the special impeller geometry. This special impeller geometry gives the fan a low noise level and an high efficiency.

1x230V fans are suitable for a room temperature till -25°C. 3x400V fans are suitable for a room temperature till -40°C. When lower room temperatures are desired, special fans are need.

Tension	: 3x400V-50Hz-3 phase
	: 1x230V-50Hz-1 phase (60Hz execution on request)
Protection class	: IP44 / IP54
Color	: RAL9005 (black)
Speed controlling	: - 3 Phase motors are suitable for 2-speed regulation by Δ-Y reconnection.
	- 3 Phase motors are suitable for frequency controller with all-pole sinus filter.
	- 1 Phase motors are suitable for phase control and transformator.

The motors are standard executed with a thermo contact (TB) and must be connected to prevent motor damages. The maximum allowable working data in the table and on the name plate of the fans are to operate in an air temperature of +20 °C (air density of ρ = 1,2 kg/m³). For air temperatures lower then +20 °C, the current amperage can be calculated by using the diagram multiplication factor, suitable thermal overloads can then be selected. In our GPC-program also the values in the working point are indicated.

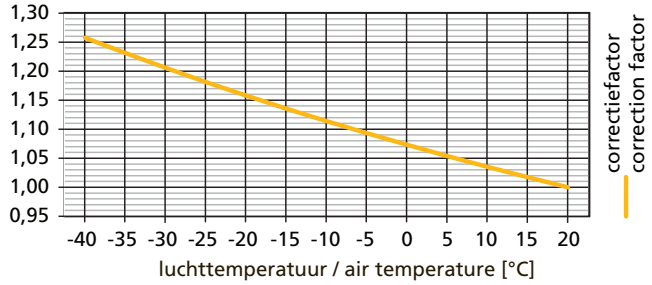

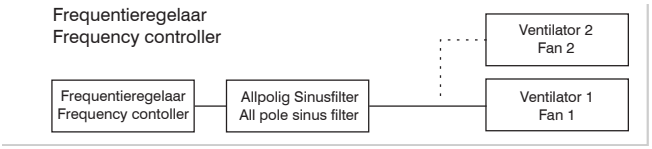

Three phase - 50 Hz

Fan type	Tension	Δ Speed	Δ Nominal power	Δ FLC	Δ Sound power indication each fan LwA (+/-2dB(A))	Y Seed	Y Nominal power	Y FLC	Y Sound power indication each fan LwA (+/-2dB(A))	Wiring diagram blow-through/ draw-trhough
	V	min⁻¹	Watt	A	dB(A)	min⁻¹	Watt	A	dB(A)	
4 pole (n=1500 min⁻¹ nom.)										
FN040	3x400/690	1370	230	0.44	76	1110	170	0.27	70,5	108B/108A
FN045	3x400/690	1250	350	0.64	78	950	220	0.35	70	108B/108A
FN050	3x400/690	1330	830	1.45	81	940	550	0.97	75	108B/108A
FN056	3x400/690	1280	1050	2.20	85	920	580	1.10	76	108B/108A
FN063	3x400/690	1360	1500	2.70	88	1100	1100	1.80	83	108B/108A
6 pole (n=1000 min⁻¹ nom.)										
FN045	3x400/690	860	170	0.39	67	640	100	0.19	61	108B/108A
FN050	3x400/690	870	290	0.74	72	590	150	0.36	64	108B/108A
FN056	3x400/690	870	340	0.70	73	630	210	0.38	65	108B/108A
FN063	3x400/690	900	630	1.25	74	720	440	0.73	69	108B/108A

Single phase - 50 Hz

Fan type	Speed	Nominal power	FLC	Sound power indication each fan LwA (+/-2dB(A))	Wiring diagram blow-through/ draw-trhough
	min⁻¹	Watt	A	dB(A)	
4 pole (n=1500 min⁻¹ nom.)					
FN040	1350	240	1.10	76	104B/104A
FN045	1290	390	1.75	80	104B/104A
FN050	1230	750	3.35	81,5	104B/104A
6 pole (n=1000 min⁻¹ nom.)					
FN040	950	130	0.58	68	104B/104A
FN045	860	180	0.82	68,5	104B/104A
FN050	910	300	1.30	71,5	104B/104A

Wiring diagram fans for blow-through air coolers

Ziehl Abegg 1x230V-50Hz (104XB)

U1 =bruin
U2 =blauw
Z1 =zwart
Z2 =oranje
TB =wit

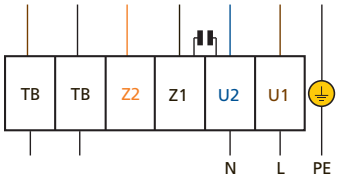

Ziehl Abegg 3x400V (Δ)-50Hz (108XB)

U1 =bruin
V1 =blauw
W1=zwart
U2 =rood
V2 =grijs
W2=oranje
TB =wit

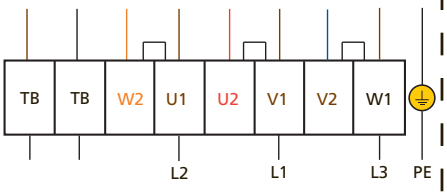

Ziehl Abegg 3x400V (Y)-50Hz (108XB)

U1 =bruin
V1 =blauw
W1=zwart
U2 =rood
V2 =grijs
W2=oranje
TB =wit

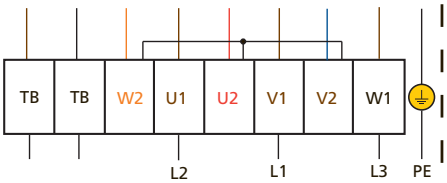

Wiring diagram fans for draw-through air coolers

Ziehl Abegg 1x230V-50Hz (104XA)

U1 =bruin
U2 =blauw
Z1 =zwart
Z2 =oranje
TB =wit

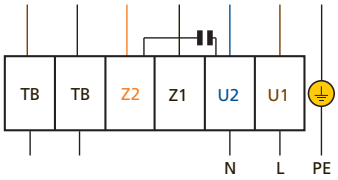

Ziehl Abegg 3x400V (Δ)-50Hz (108XA)

U1 =bruin
V1 =blauw
W1=zwart
U2 =rood
V2 =grijs
W2=oranje
TB =wit

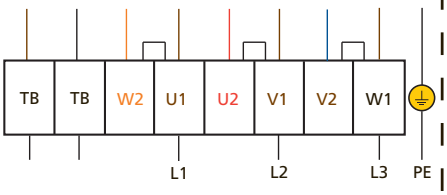

Ziehl Abegg 3x400V (Y)-50Hz (108XA)

U1 =bruin
V1 =blauw
W1=zwart
U2 =rood
V2 =grijs
W2=oranje
TB =wit

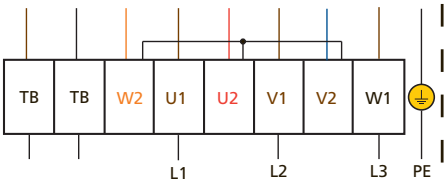

Fan heating

To prevent the freezing of the impeller of the fan during the defrost cyclus of the air cooler, a fan heater can be used.

Fan diameter	Diameter element	Power (230V)
mm	D in mm	kW
400	435	0,50
450	485	0,63
500	535	0,63
560	595	0,76
630	665	0,89

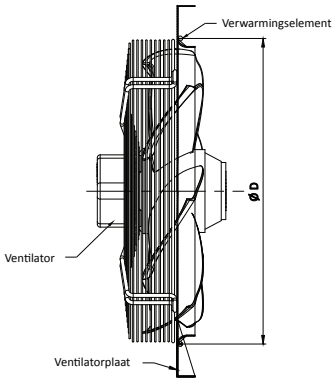

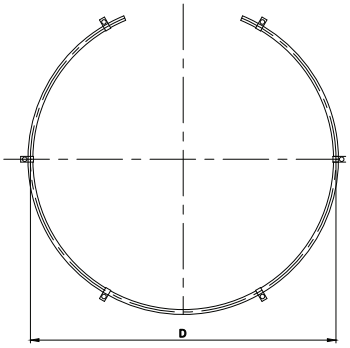

Correction factors

Capacities at DT1:

Hereby the capacities are based on NH_3 pump system and DT1. DT1 is the difference between air-on temperature and the evaporation temperature of the cooler. The evaporation temperature is the saturated temperature corresponding to the pressure at the suction outlet of the cooler.The nominal capacities are based on evaporation temperatures of -8°C and DT1=8K and -25°C and DT1=7K and light frosting.
Capacities for other mediums and systems are avalable upon request.

Correction factors for various air-on temperatures and temperature differences (DT1) are as indicated in the table below. The requested capacity must be multiplied by a correction factor from the table, so that a cooler with the resulting nominal capacity can be chosen from the selection tables.

Q nominal = factor x Q requested

NH_3 light frost = 0.2 mm RH = 85%

DT1	Verdampingstemperatuur (°C)													
K	0	-2,5	-5	-7,5	-10	-12,5	-15	-20	-22,5	-25	-27,5	-30	-32,5	-35
5	1.63	1.69	1.75	1.80	1.85	1.90	1.95	1.48	1.51	1.54	1.57	1.60	1.63	1.65
6	1.29	1.34	1.39	1.43	1.47	1.50	1.54	1.17	1.20	1.22	1.24	1.26	1.29	1.31
7	1.06	1.11	1.14	1.17	1.21	1.24	1.26	0.97	0.99	1.00	1.02	1.04	1.06	1.07
8	0.90	0.94	0.97	1.00	1.02	1.04	1.06	0.82	0.83	0.85	0.86	0.88	0.89	0.91
9	0.78	0.80	0.84	0.86	0.88	0.90	0.92	0.70	0.72	0.73	0.75	0.76	0.77	0.78
10	0.68	0.70	0.74	0.76	0.78	0.79	0.80	0.62	0.63	0.64	0.65	0.66	0.67	0.69

= gerekend zonder berijping

NH_3 normal frost = 0.5 mm RH= 85%

DT1	Verdampingstemperatuur (°C)													
K	0	-2,5	-5	-7,5	-10	-12,5	-15	-20	-22,5	-25	-27,5	-30	-32,5	-35
5		1.86	1.92	1.98	2.03	2.08	2.13	1.68	1.71	1.73	1.74	1.76	1.79	1.80
6		1.48	1.52	1.57	1.61	1.65	1.68	1.33	1.34	1.35	1.37	1.38	1.39	1.40
7		1.22	1.26	1.29	1.33	1.36	1.39	1.08	1.09	1.10	1.11	1.12	1.13	1.14
8		1.04	1.07	1.09	1.12	1.14	1.16	0.91	0.92	0.93	0.95	0.96	0.97	0.98
9			0.92	0.95	0.97	0.99	1.00	0.79	0.80	0.81	0.81	0.82	0.83	0.84
10			0.81	0.83	0.85	0.86	0.88	0.69	0.70	0.71	0.71	0.72	0.74	0.74
11			0.72	0.74	0.76									

Attention!

ATTENTION !!!

When making your selection, pay attention to the ratio between the airvolume and capacity. A low volume to capacity ratio results in a wide temperature drop across the coil which cause to dry out (especially on coils with a high number of rows deep).

Moisture carry over from the coil block:

When you select **ZGB** with a Ø500 mm fan in an application with a high relative humidity and/or defrost with room air, Goedhart advises the use of a fan with a low pitch angle or the draw-through execution ZGZ. Thus, you will avoid the risk of moisture carry over from the coil block. The fan with a low pitch angle give a reducing of the capacity of approx. 10% and a reduction of the air volume of approx. 23%.

Goedhart ZFB/ZFZ 6mm

	Type ZFB ZFZ	3x400V-50H-4pole (1500 min-1 nom.) NH3 DT1 = 8K (SC2) air on= 0°C	3x400V-50H-4pole (1500 min-1 nom.) NH3 DT1 = 7K (SC3) air on= -18° C	Air volume	LpA @ 3 m (+/- 2 dB(A))	Surface	Internal volume	Weight	Dimensions L	B	H	C	E	E1	E2	E3	Connections Refrigerant In	Out	Hotgas	Drain	Water-defrost In	Drain
		kW	kW	m³/h	dB(A)	m²	dm³	kg	mm	mm	mm	mm	mm	mm	mm	mm	mm	mm	mm	NW"	NW"	NW"
1x	**4.1.40.6**	4,7	3,3	3293	54,3	23	8	124	1056	655	600	540	656				21,3	21,3	22	1¼	1¼	2
	6.1.40.6	6,0	4,3	3060	54,3	35	12	164	1056	775	600	660	656				21,3	21,3	22	1¼	1¼	2
	8.1.40.6	6,9	4,9	2859	54,3	47	17	205	1056	895	600	780	656				21,3	21,3	22	1¼	1¼	2
	4.1.45.6	7,3	5,2	5162	56,2	36	12	167	1206	680	720	540	806				21,3	21,3	22	1¼	1¼	2
	6.1.45.6	9,5	6,9	4838	56,2	55	18	226	1206	800	720	660	806				21,3	21,3	22	1¼	1¼	2
	8.1.45.6	11,0	7,9	4554	56,2	73	24	283	1206	920	720	780	806				21,3	26,9	22	1¼	1¼	2
	4.1.50.6	9,8	7,1	7298	59,1	47	15	219	1256	775	840	640	856				21,3	26,9	22	1¼	1¼	2
	6.1.50.6	12,9	9,2	6940	59,1	70	23	289	1256	895	840	760	856				21,3	26,9	22	1¼	1¼	2
	8.1.50.6	15,1	10,8	6623	59,1	93	30	362	1256	1015	840	880	856				21,3	26,9	22	1¼	1¼	2
	4.1.56.6	13,5	9,9	10196	62,8	64	19	280	1556	890	840	740	1156				21,3	26,9	22	1¼	1¼	2
	6.156.6	18,0	12,9	9754	62,8	96	29	372	1556	1010	840	860	1156				21,3	33,7	22	1¼	1¼	2
	8.1.56.6	21,2	15,3	9374	62,8	128	39	465	1556	1130	840	980	1156				21,3	33,7	22	1¼	1¼	3
	4.1.63.6	18,3	13,2	12748	65,7	93	28	389	1656	885	1080	740	1256				21,3	33,7	22	1¼	1¼	2
	6.1.63.6	24,3	17,4	12396	65,7	140	41	506	1656	1005	1080	860	1256				21,3	33,7	22	1¼	1¼	2
	8.1.63.6	28,5	20,3	12046	65,7	186	55	647	1656	1125	1080	980	1256				21,3	42,4	22	1¼	1¼	3
2x	**4.2.40.6**	9,3	6,7	6575	57,0	47	14	198	1656	655	600	540	1256				21,3	21,3	22	1¼	1¼	2
	6.2.40.6	12,0	8,7	6106	57,0	70	21	267	1656	775	600	660	1256				21,3	26,9	22	1¼	1¼	2
	8.2.40.6	13,8	9,8	5704	57,0	93	28	338	1656	895	600	780	1256				21,3	26,9	22	1¼	1¼	3
	4.2.45.6	14,6	10,3	10313	58,9	73	21	287	1956	680	720	540	1556				21,3	26,9	22	1¼	1¼	2
	6.2.45.6	18,9	13,7	9662	58,9	109	31	391	1956	800	720	660	1556				21,3	33,7	22	1¼	1¼	2
	8.2.45.6	21,9	15,7	9092	58,9	145	42	497	1956	920	720	780	1556				21,3	33,7	22	1¼	1¼	3
	4.2.50.6	19,5	14,2	14584	61,7	93	26	374	2056	775	840	640	1656				21,3	33,7	22	1¼	1¼	2
	6.2.50.6	25,8	18,5	13864	61,7	139	40	506	2056	895	840	760	1656				21,3	33,7	22	1¼	1¼	3
	8.2.50.6	30,2	21,9	13228	61,7	186	53	636	2056	1015	840	880	1656				21,3	42,4	22	1¼	1¼	3
	4.2.56.6	27,0	19,7	20381	65,4	128	35	494	2656	890	840	740	2256				21,3	42,4	22	1¼	1¼	3
	6.2.56.6	35,8	26,0	19492	65,4	192	52	666	2656	1010	840	860	2256				21,3	42,4	34	1¼	1¼	3
	8.2.56.6	42,3	30,6	18733	65,4	255	70	838	2656	1130	840	980	2256				26,9	42,4	34	1¼	1¼	3
	4.2.63.6	36,6	26,4	25489	68,3	186	50	693	2856	885	1080	740	2456				21,3	42,4	34	1¼	2x1¼	3
	6.2.63.6	48,5	34,8	24779	68,3	279	75	937	2856	1005	1080	860	2456				26,9	42,4	34	1¼	2x1¼	3
	8.2.63.6	57,0	40,5	24079	68,3	372	100	1178	2856	1125	1080	980	2456				26,9	48,3	34	1¼	2x1¼	3
3x	**4.3.45.6**	21,8	16,0	15464	60,4	109	30	395	2706	680	720	540	2306				21,3	33,7	22	1¼	1¼	2
	6.3.45.6	28,4	20,5	14486	60,4	163	45	544	2706	800	720	660	2306				21,3	42,4	22	1¼	1¼	2x2
	8.3.45.6	32,7	23,5	13629	60,4	218	60	693	2706	920	720	780	2306				21,3	42,4	34	1¼	1¼	2x2
	4.3.50.6	29,2	21,2	21870	63,1	139	38	518	2856	775	840	640	2456				21,3	42,4	22	2x1¼	1¼	2x2
	6.3.50.6	38,6	28,0	20790	63,1	209	57	706	2856	895	840	760	2456				21,3	42,4	34	2x1¼	1¼	2x2
	8.3.50.6	45,3	32,5	19834	63,1	279	76	892	2856	1015	840	880	2456				26,9	42,4	34	2x1¼	1¼	3
	4.3.56.6	40,5	29,6	30567	66,8	191	53	708	3756	890	840	740	3356	1128	1128	1100	21,3	42,4	34	2x1¼	2x1¼	2x2
	6.3.56.6	53,7	38,6	29233	66,8	287	80	958	3756	1010	840	860	3356	1128	1128	1100	26,9	48,3	34	2x1¼	2x1¼	2x3
	8.3.56.6	63,4	45,8	28092	66,8	383	106	1210	3756	1130	840	980	3356	1128	1128	1100	26,9	48,3	42	2x1¼	2x1¼	2x3
	4.3.63.6	54,9	39,4	38230	69,6	278	76	1000	4056	885	1080	740	3656	1228	1228	1200	26,9	48,3	34	2x1¼	2x1¼	2x3
	6.3.63.6	72,7	52,4	37165	69,6	418	114	1355	4056	1005	1080	860	3656	1228	1228	1200	33,7	60,3	42	2x1¼	2x1¼	2x3
4x	**4.4.45.6**	29,1	20,7	20615	61,3	145	39	514	3456	680	720	540	3056				21,3	42,4	22	1¼	2x1¼	2x2
	6.4.45.6	37,8	27,4	19309	61,3	218	58	709	3456	800	720	660	3056				21,3	42,4	34	1¼	2x1¼	2x2
	8.4.45.6	43,7	31,4	18166	61,3	290	77	908	3456	920	720	780	3056				26,9	42,4	34	1¼	2x1¼	3
	4.4.50.6	39,0	28,6	29156	64,0	186	49	690	3656	775	840	640	3256	1628	1628		21,3	42,4	34	2x1¼	2x1¼	2x2
	6.4.50.6	51,5	36,9	27714	64,0	278	74	940	3656	895	840	760	3256	1628	1628		26,9	42,4	34	2x1¼	2x1¼	2x3
	8.4.50.6	60,4	43,7	26439	64,0	371	98	1186	3656	1015	840	880	3256	1628	1628		26,9	48,3	34	2x1¼	2x1¼	2x3

* = Sound pressure indication (LpA) at 3 m distance each air cooler (+/- 2 dB(A)) , free field conditions, according EN13487

For moisture carry over see remark pag 5

Capacities and air volumes with 60 Hz fans on request or in our GPC selection program available.

Goedhart ZFB/ZFZ 8mm

	Type ZFB ZFZ	3x400V-50H-4pole (1500 min⁻¹ nom.) NH3 DT1 = 8K (SC2) air on= 0°C	DT1 = 7K (SC3) air on= -18°C	Air volume	LpA @ 3 m (+/- 2 dB(A))	Surface	Internal volume	Weight	Dimensions L	B	H	C	E	E1	E2	E3	Connections Refrigerant In	Out	Hotgas	Drain	Water-defrost In	Drain
		kW	kW	m³/h	dB(A)	m²	dm³	kg	mm	mm	mm	mm	mm	mm	mm	mm	mm	mm	mm	NW"	NW"	NW"
1x	**4.1.40.8**	3,9	2,8	3352	54,3	18	8	115	1056	655	600	540	656				21,3	21,3	22	1¼	1¼	1¼
	6.1.40.8	5,2	3,7	3140	54,3	27	12	151	1056	775	600	660	656				21,3	21,3	22	1¼	1¼	1¼
	8.1.40.8	6,2	4,4	2951	54,3	36	17	189	1056	895	600	780	656				21,3	21,3	22	1¼	1¼	1¼
	4.1.45.8	6,1	4,4	5243	56,2	28	12	154	1206	680	720	540	806				21,3	21,3	22	1¼	1¼	2
	6.1.45.8	8,2	5,9	4952	56,2	42	18	205	1206	800	720	660	806				21,3	21,3	22	1¼	1¼	2
	8.1.45.8	9,7	7,0	4685	56,2	56	24	257	1206	920	720	780	806				21,3	26,9	22	1¼	1¼	2
	4.1.50.8	8,2	5,9	7390	59,1	36	15	201	1256	775	840	640	856				21,3	21,3	22	1¼	1¼	2
	6.1.50.8	11,1	8,1	7064	59,1	54	23	265	1256	895	840	760	856				21,3	26,9	22	1¼	1¼	2
	8.1.50.8	13,3	9,5	6770	59,1	71	30	324	1256	1015	840	880	856				21,3	26,9	22	1¼	1¼	2
	4.1.56.8	11,3	8,4	10315	62,8	49	19	257	1556	890	840	740	1156				21,3	26,9	22	1¼	1¼	2
	6.156.8	15,4	10,9	9905	62,8	74	29	338	1556	1010	840	860	1156				21,3	26,9	22	1¼	1¼	2
	8.1.56.8	18,5	13,5	9549	62,8	98	39	417	1556	1130	840	980	1156				21,3	33,7	22	1¼	1¼	2
	4.1.83.8	15,3	10,9	12831	65,7	71	28	355	1656	885	1080	740	1256				21,3	26,9	22	1¼	1¼	2
	6.1.63.8	20,8	15,2	12522	65,7	107	41	467	1656	1005	1080	860	1256				21,3	33,7	22	1¼	1¼	2
	8.1.63.8	25,0	17,8	12213	65,7	142	55	579	1656	1125	1080	980	1256				21,3	33,7	22	1¼	1¼	3
2x	**4.2.40.8**	7,8	5,6	6696	57,0	36	14	181	1656	655	600	540	1256				21,3	21,3	22	1¼	1¼	2
	6.2.40.8	10,4	7,6	6268	57,0	53	21	242	1656	775	600	660	1256				21,3	26,9	22	1¼	1¼	2
	8.2.40.8	12,3	8,7	5890	57,0	71	28	303	1656	895	600	780	1256				21,3	26,9	22	1¼	1¼	2
	4.2.45.8	12,2	8,9	10478	58,9	56	21	260	1956	680	720	540	1556				21,3	26,9	22	1¼	1¼	2
	6.245.8	16,4	11,8	9888	58,9	83	31	351	1956	800	720	660	1556				21,3	33,7	22	1¼	1¼	2
	8.2.45.8	19,4	14,0	9355	58,9	111	41	443	1956	920	720	780	1556				21,3	33,7	22	1¼	1¼	2
	4.2.50.8	16,4	11,7	14769	61,7	71	26	341	2056	775	840	640	1656				21,3	33,7	22	1¼	1¼	2
	6.2.50.8	22,1	16,1	14114	61,7	107	40	456	2056	895	840	760	1656				21,3	33,7	22	1¼	1¼	2
	8.2.50.8	26,5	19,2	13525	61,7	142	53	569	2056	1015	840	880	1656				21,3	42,4	22	1¼	1¼	3
	4.2.56.8	22,6	16,7	20620	65,4	98	35	448	2656	890	840	740	2256				21,3	33,7	22	1¼	1¼	2
	6.2.56.8	30,7	22,4	19796	65,4	147	52	596	2656	1010	840	860	2256				21,3	42,4	22	1¼	1¼	3
	8.2.56.8	37,0	26,9	19085	65,4	195	70	742	2656	1130	840	980	2256				21,3	42,4	34	1¼	1¼	3
	4.2.63.8	30,6	21,8	25658	68,3	142	50	626	2856	885	1080	740	2456				21,3	42,4	22	1¼	2x1¼	3
	6.2.63.8	41,6	30,3	25036	68,3	213	75	835	2856	1005	1080	860	2456				26,9	42,4	34	1¼	2x1¼	3
	8.2.63.8	50,0	35,6	24414	68,3	284	100	1042	2856	1125	1080	980	2456				26,9	42,4	34	1¼	2x1¼	3
3x	**4.3.45.8**	18,3	13,4	15713	60,4	83	30	357	2706	680	720	540	2306				21,3	33,7	22	1¼	1¼	2
	6.3.45.8	24,5	17,6	14826	60,4	125	45	484	2706	800	720	660	2306				21,3	33,7	22	1¼	1¼	2x2
	8.3.45.8	29,0	20,7	14025	60,4	167	60	613	2706	920	720	780	2306				21,3	42,4	22	1¼	1¼	2x2
	4.3.50.8	24,5	17,9	22148	63,1	107	38	469	2856	775	840	640	2456				21,3	33,7	22	1¼	2x1¼	2x2
	6.3.50.8	33,1	24,1	21165	63,1	160	57	630	2856	895	840	760	2456				21,3	42,4	22	1¼	2x1¼	2x2
	8.3.50.8	39,8	28,9	20279	63,1	213	76	790	2856	1015	840	880	2456				21,3	42,4	34	1¼	2x1¼	2x2
	4.356.8	33,9	25,0	30925	66,8	146	51	639	3756	890	840	740	3356	1128	1128	1100	21,3	42,4	22	2x1¼	2x1¼	2x2
	6.356.8	46,0	33,4	29689	66,8	220	76	854	3756	1010	840	860	3356	1128	1128	1100	26,9	42,4	34	2x1¼	2x1¼	2x2
	8.3.56.8	55,5	40,3	28620	66,8	293	101	1069	3756	1130	840	980	3356	1128	1128	1100	26,9	48,3	34	2x1¼	2x1¼	3
	4.3.63.8	46,0	33,8	38484	69,6	213	76	899	4056	885	1080	740	3656	1228	1228	1200	26,9	42,4	34	2x1¼	2x1¼	2x2
	6.3.63.8	62,4	45,4	37548	69,6	320	114	1202	4056	1005	1080	860	3656	1228	1228	1200	26,9	48,3	34	2x1¼	2x1¼	3
4x	**4.4.45.8**	24,4	17,8	20947	61,3	111	39	462	3456	680	720	540	3056				21,3	33,7	22	1¼	2x1¼	2x2
	6.4.45.8	32,7	23,7	19763	61,3	166	58	630	3456	800	720	660	3056				21,3	42,4	22	1¼	2x1¼	2x2
	8.4.45.8	38,7	28,0	18695	61,3	222	77	801	3456	920	720	780	3056				21,3	42,4	34	1¼	2x1¼	2x2
	4.4.50.8	32,7	24,1	29527	64,0	142	49	622	3656	775	840	640	3256	1628	1628		21,3	42,4	22	2x1¼	2x1¼	2x2
	6.4.50.8	44,2	32,1	28214	64,0	213	74	838	3656	895	840	760	3256	1628	1628		26,9	42,4	34	2x1¼	2x1¼	2x2
	8.4.50.8	53,0	38,4	27033	64,0	284	98	1050	3656	1015	840	880	3256	1628	1628		26,9	48,3	34	2x1¼	2x1¼	3

* = Sound pressure indication (LpA) at 3 m distance each air cooler (+/- 2 dB(A)) , free field conditions, according EN13487

For moisture carry over see remark pag 5

Capacities and air volumes with 60 Hz fans on request or in our GPC selection program available.

Goedhart ZFB/ZFZ 10mm

	Type ZFB ZFZ	3x400V-50H-4pole (1500 min⁻¹ nom.) NH3 DT1 = 8K (SC2) air on= 0°C	DT1 = 7K (SC3) air on= -18°C	Air volume	LpA @ 3 m (+/- 2 dB(A))	Surface	Internal volume	Weight	Dimensions L	B	H	C	E	E1	E2	E3	Connections Refrigerant In	Out	Hotgas	Drain	Water-defrost In	Drain
		kW	kW	m³/h	dB(A)	m²	dm³	kg	mm	mm	mm	mm	mm	mm	mm	mm	mm	mm	mm	NW"	NW"	NW"
1x	6.1.40.10	4,6	3,3	3191	54,3	22	12	144	1056	775	600	660	656				21,3	21,3	22	1¼	1¼	1¼
	8.1.40.10	5,6	4,0	3011	54,3	29	17	178	1056	895	600	780	656				21,3	21,3	22	1¼	1¼	1¼
	1.1.40.10	6,2	4,5	2853	54,3	37	21	212	1056	1015	600	900	656				21,3	21,3	22	1¼	1¼	1¼
	6.1.45.10	7,3	5,2	5021	56,2	34	18	193	1206	800	720	660	806				21,3	21,3	22	1¼	1¼	2
	8.1.45.10	8,7	6,4	4770	56,2	46	24	240	1206	920	720	780	806				21,3	21,3	22	1¼	1¼	2
	1.1.45.10	9,9	7,1	4544	56,2	57	30	288	1206	1040	720	900	806				21,3	26,9	22	1¼	1¼	2
	6.1.50.10	9,8	7,1	7141	59,1	44	23	249	1256	895	840	760	856				21,3	26,9	22	1¼	1¼	2
	8.1.50.10	11,9	8,5	6863	59,1	58	30	307	1256	1015	840	880	856				21,3	26,9	22	1¼	1¼	2
	1.1.5010	13,6	9,7	6612	59,1	73	38	365	1256	1135	840	1000	856				21,3	26,9	22	1¼	1¼	2
	6.1.56.10	13,6	9,7	10000	62,8	60	29	317	1556	1010	840	860	1156				21,3	26,9	22	1¼	1¼	2
	8.1.56.10	16,6	12,0	9661	62,8	80	39	389	1556	1130	840	980	1156				21,3	33,7	22	1¼	1¼	2
	1.1.56.10	19,0	13,6	9360	62,8	100	48	464	1556	1250	840	1100	1156				21,3	33,7	22	1¼	1¼	2
	6.1.63.10	18,4	13,4	12599	65,7	87	41	437	1656	1005	1080	860	1256				21,3	33,7	22	1¼	1¼	2
	8.1.63.10	22,5	16,0	12315	65,7	116	55	537	1656	1125	1080	980	1256				21,3	33,7	22	1¼	1¼	2
	1.1.63.10	25,8	18,4	12033	65,7	145	69	639	1656	1245	1080	1100	1256				21,3	42,4	22	1¼	1¼	3
2x	6.2.40.10	9,2	6,7	6370	57,0	44	21	227	1656	775	600	660	1256				21,3	21,3	22	1¼	1¼	2
	8.2.40.10	11,1	7,9	6008	57,0	58	28	282	1656	895	600	780	1256				21,3	26,9	22	1¼	1¼	2
	1.2.40.10	12,4	8,9	5690	57,0	73	35	337	1656	1015	600	900	1256				21,3	26,9	22	1¼	1¼	2
	6.2.45.10	14,5	10,3	10029	58,9	68	31	327	1956	800	720	660	1556				21,3	26,9	22	1¼	1¼	2
	8.2.45.10	17,4	12,7	9523	58,9	91	42	412	1956	920	720	780	1556				21,3	33,7	22	1¼	1¼	2
	1.2.45.10	19,7	14,1	9071	58,9	113	52	493	1956	1040	720	900	1556				21,3	33,7	22	1¼	1¼	2
	6.2.50.10	19,5	14,3	14269	61,7	87	40	425	2056	895	840	760	1656				21,3	33,7	22	1¼	1¼	2
	8.2.50.10	23,8	17,2	13711	61,7	116	53	528	2056	1015	840	880	1656				21,3	33,7	22	1¼	1¼	2
	1.2.50.10	27,2	19,4	13206	61,7	145	66	630	2056	1135	840	1000	1656				21,3	42,4	22	1¼	1¼	3
	6.2.56.10	27,1	19,8	19988	65,4	120	52	555	2656	1010	840	860	2256				21,3	42,4	22	1¼	1¼	2
	8.2.56.10	33,1	24,0	19308	65,4	159	70	687	2656	1130	840	980	2256				21,3	42,4	22	1¼	1¼	3
	1.2.56.10	38,0	27,3	18706	65,4	199	87	820	2656	1250	840	1100	2256				21,3	42,4	34	1¼	1¼	3
	6.2.63.10	36,7	26,8	25189	68,3	174	75	774	2856	1005	1080	860	2456				21,3	42,4	34	1¼	2x1¼	3
	8.2.63.10	44,8	32,0	24617	68,3	232	100	960	2856	1125	1080	980	2456				26,9	42,4	34	1¼	2x1¼	3
	1.2.63.10	51,5	36,8	24052	68,3	290	126	1147	2856	1245	1080	1100	2456				26,9	48,3	34	1¼	2x1¼	3
3x	6.3.45.10	21,7	15,5	15038	60,4	102	45	449	2706	800	720	660	2306				21,3	33,7	22	1¼	1¼	2x2
	8.3.45.10	26,1	18,7	14277	60,4	136	60	565	2706	920	720	780	2306				21,3	33,7	22	1¼	1¼	2x2
	1.3.45.10	29,5	21,3	13599	60,4	170	74	682	2706	1040	720	900	2306				21,3	42,4	22	1¼	1¼	2x2
	6.3.50.10	29,3	21,4	21396	63,1	130	57	583	2856	895	840	760	2456				21,3	42,4	22	1¼	2x1¼	2x2
	8.3.50.10	35,7	25,9	20559	63,1	174	76	729	2856	1015	840	880	2456				21,3	42,4	34	1¼	2x1¼	2x2
	1.3.50.10	40,7	29,5	19799	63,1	217	94	871	2856	1135	840	1000	2456				26,9	42,4	34	1¼	2x1¼	2x2
	6.3.56.10	40,6	29,6	29975	66,8	179	76	790	3756	1010	840	860	3356	1128	1128	1100	21,3	42,4	34	2x1¼	2x1¼	2x2
	8.3.56.10	49,6	36,0	28954	66,8	239	101	983	3756	1130	840	980	3356	1128	1128	1100	26,9	42,4	34	2x1¼	2x1¼	3
	1.3.56.10	56,9	40,7	28052	66,8	299	126	1177	3756	1250	840	1100	3356	1128	1128	1100	26,9	48,3	34	2x1¼	2x1¼	3
	6.3.63.10	55,1	40,2	37779	69,6	261	114	1111	4056	1005	1080	860	3656	1228	1228	1200	26,9	48,3	34	2x1¼	2x1¼	3
	8.3.63.10	67,2	48,9	36918	69,6	348	152	1381	4056	1125	1080	980	3656	1228	1228	1200	33,7	48,3	34	2x1¼	2x1¼	2x3
4x	6.4.45.10	29,0	21,1	20045	61,3	136	58	582	3456	800	720	660	3056				21,3	42,4	22	1¼	2x1¼	2x2
	8.4.45.10	34,8	25,3	19031	61,3	181	77	736	3456	920	720	780	3056				21,3	42,4	34	1¼	2x1¼	2x2
	1.4.45.10	39,4	28,5	18127	61,3	226	97	886	3456	1040	720	900	3056				21,3	42,4	34	1¼	2x1¼	2x2
	6.4.50.10	39,0	28,5	28525	64,0	174	74	776	3656	895	840	760	3256	1628	1628		21,3	42,4	34	2x1¼	2x1¼	2x2
	8.4.50.10	47,5	34,3	27406	64,0	232	98	968	3656	1015	840	880	3256	1628	1628		26,9	42,4	34	2x1¼	2x1¼	3
	1.4.50.10	54,3	38,8	26394	64,0	290	123	1159	3656	1135	840	1000	3256	1628	1628		26,9	48,3	34	2x1¼	2x1¼	3

* = Sound pressure indication (LpA) at 3 m distance each air cooler (+/- 2 dB(A)) , free field conditions, according EN13487

For moisture carry over see remark pag 5

Capacities and air volumes with 60 Hz fans on request or in our GPC selection program available.

Goedhart ZFB/ZFZ 12mm

	Type ZFB ZFZ	3x400V-50H-4pole (1500 min⁻¹ nom.) NH3 DT1 = 8K (SC2) air on= 0°C	DT1 = 7K (SC3) air on= -18°C	Air volume	LpA @ 3 m (+/- 2 dB(A))	Surface	Internal volume	Weight	Dimensions L	B	H	C	E	E1	E2	E3	Connections Refrigerant In	Out	Hotgas	Drain	Water-defrost In	Drain
		kW	kW	m³/h	dB(A)	m²	dm³	kg	mm	mm	mm	mm	mm	mm	mm	mm	mm	mm	mm	NW"	NW"	NW"
1x	**8.1.40.12**	5,1	3,6	3052	54,3	25	17	171	1056	895	600	780	656				21,3	21,3	22	1¼	1¼	1¼
	1.1.40.12	5,8	4,1	2897	54,3	31	21	204	1056	1015	600	900	656				21,3	21,3	22	1¼	1¼	1¼
	8.1.45.12	8,0	5,8	4827	56,2	39	24	230	1206	920	720	780	806				21,3	21,3	22	1¼	1¼	2
	1.1.45.12	9,1	6,5	4609	56,2	48	30	274	1206	1040	720	900	806				21,3	21,3	22	1¼	1¼	2
	8.1.50.12	10,9	7,8	6926	59,1	49	30	293	1256	1015	840	880	856				21,3	26,9	22	1¼	1¼	2
	1.1.50.12	12,5	9,0	6684	59,1	62	38	347	1256	1135	840	1000	856				21,3	26,9	22	1¼	1¼	2
	8.1.56.12	15,1	10,9	9737	62,8	68	39	370	1556	1130	840	980	1156				21,3	26,9	22	1¼	1¼	2
	1.156.12	17,5	12,5	9446	62,8	85	48	440	1556	1250	840	1100	1156				21,3	33,7	22	1¼	1¼	2
	8.1.63.12	20,5	14,6	12382	65,7	99	55	509	1656	1125	1080	980	1256				21,3	33,7	22	1¼	1¼	2
	1.1.63.12	23,7	16,9	12115	65,7	123	69	605	1656	1245	1080	1100	1256				21,3	33,7	22	1¼	1¼	2
2x	**8.2.40.12**	10,2	7,3	6090	57,0	49	28	269	1656	895	600	780	1256				21,3	26,9	22	1¼	1¼	2
	1.2.40.12	11,5	8,3	5781	57,0	62	35	319	1656	1015	600	900	1256				21,3	26,9	22	1¼	1¼	2
	8.2.45.12	16,0	11,6	9638	58,9	77	42	390	1956	920	720	780	1556				21,3	26,9	22	1¼	1¼	2
	1.2.45.12	18,2	13,0	9200	58,9	96	52	466	1956	1040	720	900	1556				21,3	33,7	22	1¼	1¼	2
	8.2.50.12	21,7	15,6	13839	61,7	99	53	500	2056	1015	840	880	1656				21,3	33,7	22	1¼	1¼	2
	1.2.50.12	25,0	17,9	13351	61,7	123	66	595	2056	1135	840	1000	1656				21,3	33,7	22	1¼	1¼	2
	8.2.56.12	30,2	21,7	19461	65,4	135	70	649	2656	1130	840	980	2256				21,3	42,4	22	1¼	1¼	2
	1.2.56.12	34,9	25,0	18878	65,4	169	87	773	2656	1250	840	1100	2256				21,3	42,4	34	1¼	2x1¼	2
	8.2.63.12	40,9	29,2	24753	68,3	197	100	905	2856	1125	1080	980	2456				26,9	42,4	34	1¼	2x1¼	3
	1.2.63.12	47,4	33,8	24219	68,6	246	126	1078	2856	1245	1080	1100	2456				26,9	42,4	34	1¼	1¼	3
3x	**8.3.45.12**	23,9	17,1	14451	60,4	115	60	532	2706	920	720	780	2306				21,3	33,7	22	1¼	1¼	2x2
	1.3.45.12	27,3	19,6	13792	60,4	144	74	641	2706	1040	720	900	2306				21,3	42,4	22	1¼	2x1¼	2x2
	8.3.50.12	32,5	23,6	20751	63,1	148	76	687	2856	1015	840	880	2456				21,3	42,4	22	1¼	2x1¼	2x2
	1.3.50.12	37,5	27,1	20017	63,1	185	94	819	2856	1135	840	1000	2456				21,3	42,4	34	1¼	2x1¼	2x2
	8.3.56.12	45,2	32,6	29186	66,8	203	101	926	3756	1130	840	980	3356	1128	1128	1100	26,9	42,4	34	2x1¼	2x1¼	2x2
	1.3.56.12	52,3	37,4	28309	66,8	254	126	1105	3756	1250	840	1100	3356	1128	1128	1100	26,9	42,4	34	2x1¼	2x1¼	2x2
	8.3.63.12	61,3	44,4	37124	69,6	295	146	1299	4056	1125	1080	980	3656	1228	1228	1200	26,9	48,3	34	2x1¼	2x1¼	2x2
	1.3.63.12	71,0	51,1	36321	69,6	369	182	1550	4056	1245	1080	1100	3656	1228	1228	1200	33,7	60,3	42	2x1¼	2x1¼	2x2
4x	**8.4.45.12**	31,9	23,1	19262	61,3	154	77	694	3456	920	720	780	3056				21,3	42,4	22	1¼	2x1¼	2x3
	1.4.45.12	36,4	26,3	18384	61,3	192	97	833	3456	1040	720	900	3056				21,3	42,4	34	1¼	2x1¼	2x3
	8.4.50.12	43,3	31,1	27663	64,0	197	98	912	3656	1015	840	880	3256	1628	1628		26,9	42,4	34	2x1¼	2x1¼	2x3
	1.4.50.12	50,0	35,7	26685	64,0	246	123	1090	3656	1135	840	1000	3256	1628	1628		26,9	42,4	34	2x1¼	2x1¼	2x3

* = Sound pressure indication (LpA) at 3 m distance each air cooler (+/- 2 dB(A)) , free field conditions, according EN13487

For moisture carry over see remark pag 5

Capacities and air volumes with 60 Hz fans on request or in our GPC selection program available.

Goedhart ZFB/ZFZ Drawing

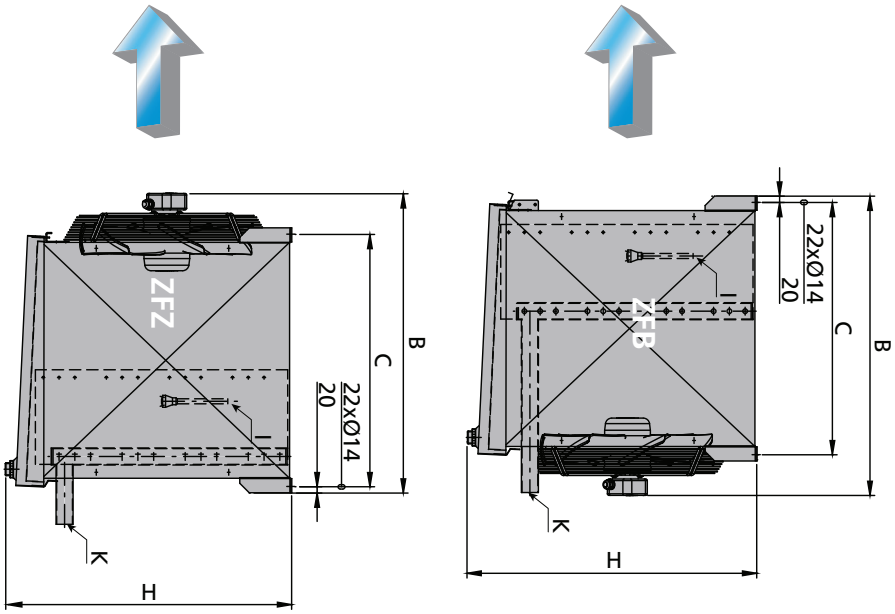

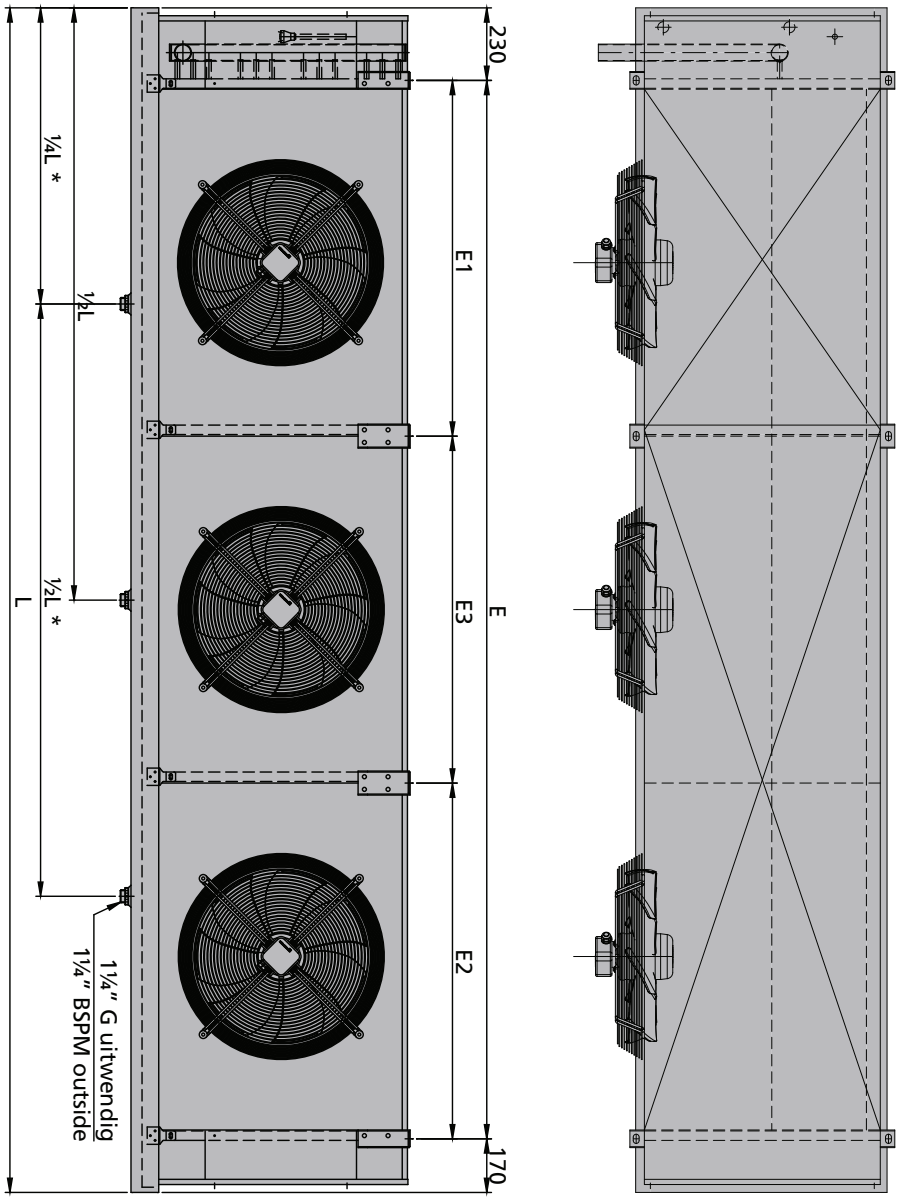

* = type .3.56.
type .3.63.
type .4.50.

GEA Goedhart air coolers for every application

For Contractors and Original Equipment Manufacturers (OEM) related to the industrial refrigeration industry, GEA Goedhart B.V. offers an unlimited range of air coolers and air cooled condensers in several configurations.

Depending on the application, the optimum configuration will be selected in close cooperation with our customers.



GEA Goedhart product family

KB.h



LLK	DU	TN
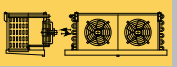		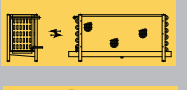
VC	DVS	PLK
VNS	DRS	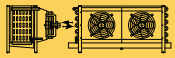
VR.	DZS	ZG
ZF.		AU
BC50		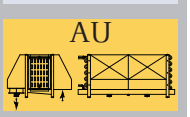

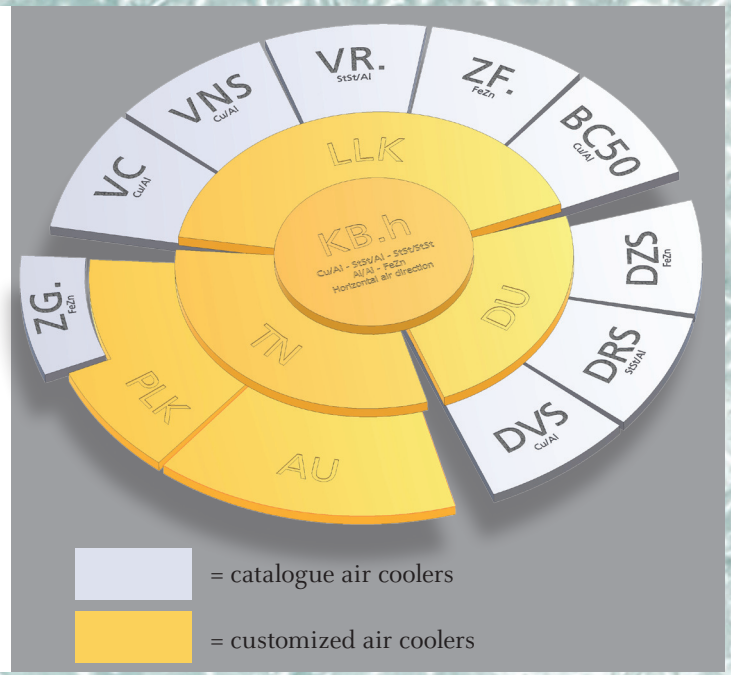

Pressure Equipment Directive (P.E.D)

All aircoolers produced by GEA Goedhart comply with the Pressure Equipment Directive 97/23/EC. PED certificates can be downloaded from www.goedhart.nl.

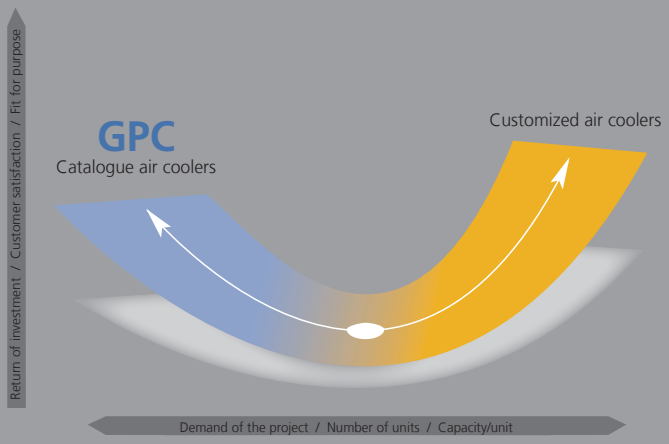

Best of both worlds

One question which always is in the mind of an industrial refrigeration engineer is the following: Do I ask for standard or shall I go for tailor made?

There are good reasons for both choices. In some cases, the solution needed is beyond the boundaries of the standard program. In other occasions, tailor made can even offer a more economical solution. In again other situations standard would be the logical choice to go for.

In any of the cases GEA Goedhart can offer you the right solution. With the standard selection software GPC finding the right heat exchanger is just a few mouse clicks away. On other cases the GEA Goedhart engineers are happy to help you out!



How to select the correct ZFB/ZFZ?

Please use the GEA Goedhart – GPC program!

User-friendly selection software for contractors, consultants, and every other feasible user. Accurate selection and an extensive list of accessories, including drawings. Under the GPC shell hides a sophisticated capacity calculation program that optimises circuits to the design conditions as you work.

www.goedhart.nl

Notes

Excellence Passion Integrity Responsibility GEA-versity

GEA Group is a global mechanical engineering company with multi-billion euro sales and operations in more than 50 countries. Founded in 1881 the company is one of the largest providers of innovative equipment and process technology. GEA Group is listed in the STOXX Europe 600 Index.

GEA Heat Exchangers

GEA Goedhart B.V.

Nijverheidsweg 6, 4695 RC Sint Maartensdijk
The Netherlands
Phone +31 (0)166 665 665, Fax+31 (0)166 663 698
www.gea.com / www.goedhart.nl,
info.goedhart.nl@gea.com

GEA Heat Exchangers

GEA Heat Exchangers s.a. / GEA Goedhart systems

Kostomlátecká 180, 288 26 Nymburk
Czech Republic
Phone +420 325 519 951, Fax+420 325 519 952
www.gea.com / www.goedhart.cz,
goedhart.cz@gea.com

© GEA Group AG. All rights reserved
Version: 07.01.2.009.dok - 2014-11. Subject to modification.