A MODULE

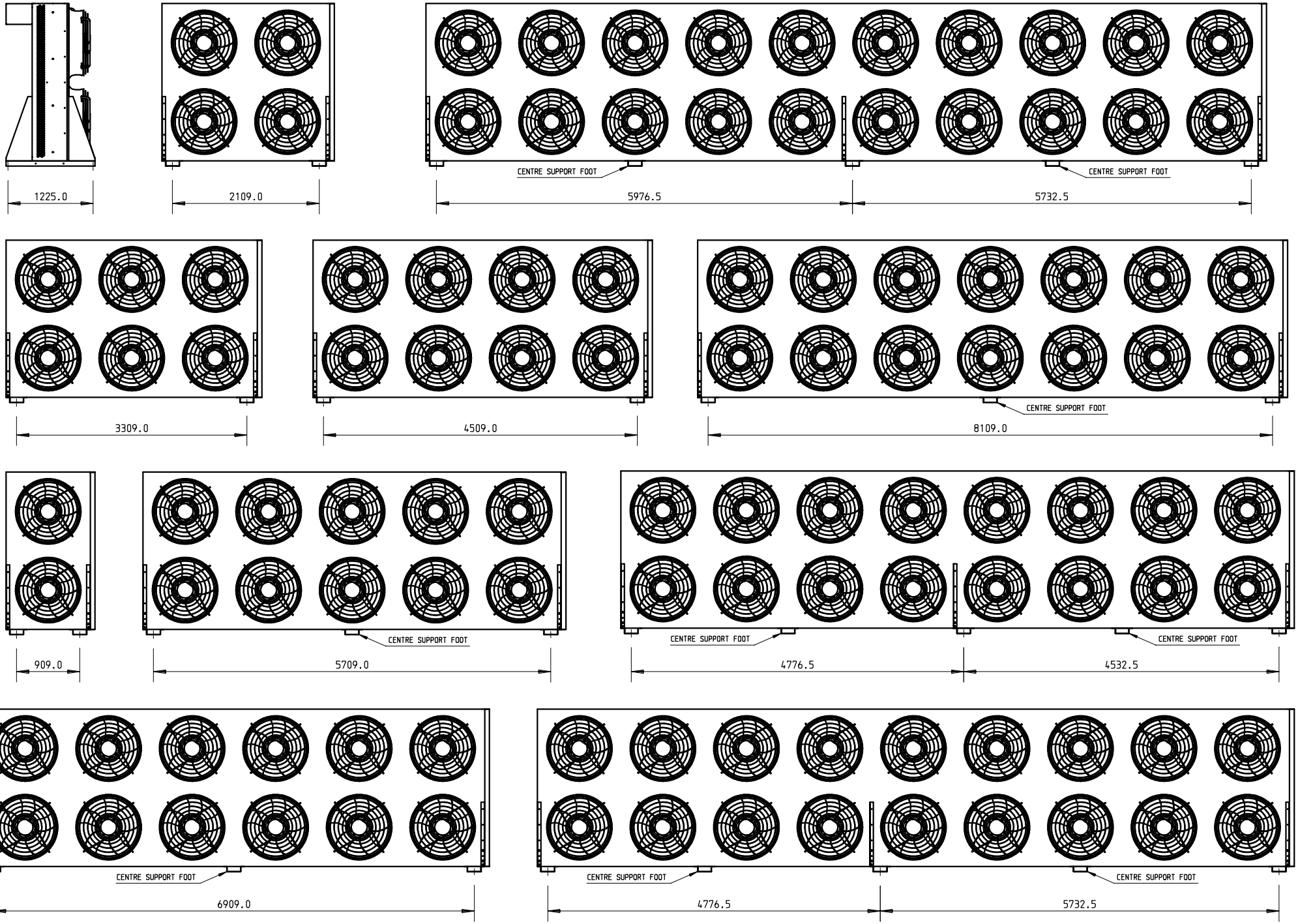
1225.0
2109.0
CENTRE SUPPORT FOOT
CENTRE SUPPORT FOOT
5976.5
5732.5
3309.0
4509.0
CENTRE SUPPORT FOOT
8109.0
909.0
CENTRE SUPPORT FOOT
5709.0
CENTRE SUPPORT FOOT
CENTRE SUPPORT FOOT
4776.5
4532.5
CENTRE SUPPORT FOOT
6909.0
CENTRE SUPPORT FOOT
CENTRE SUPPORT FOOT
4776.5
5732.5

B MODULE

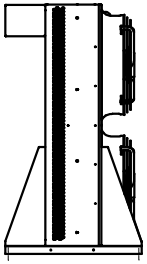

1225.0

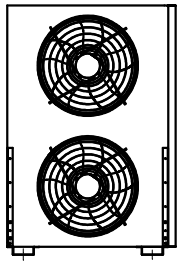

1209.0

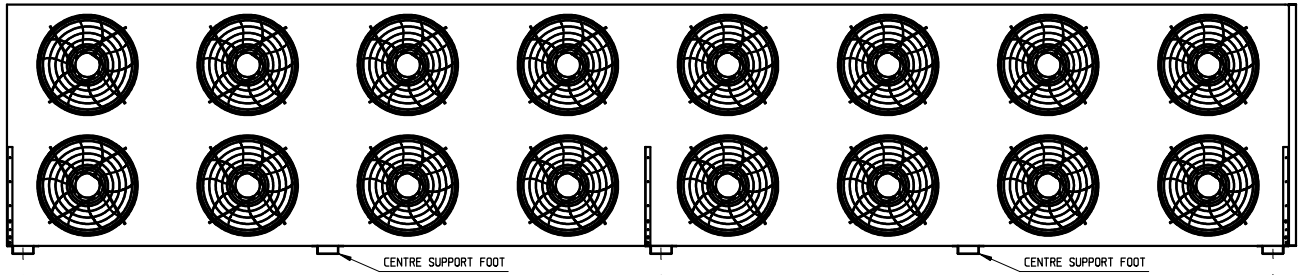

5976.5 5732.5

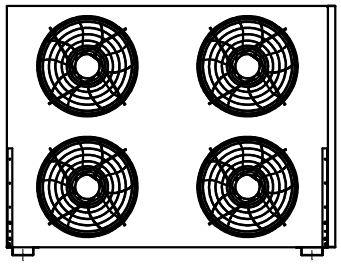

2709.0

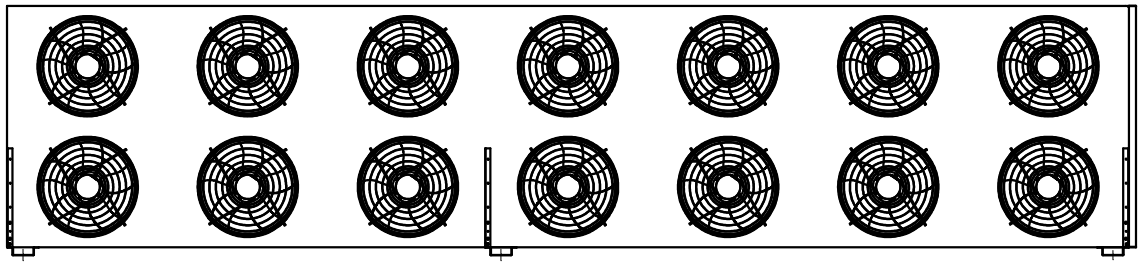

4476.5 5732.5

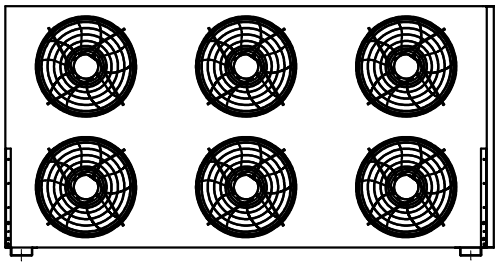

4209.0

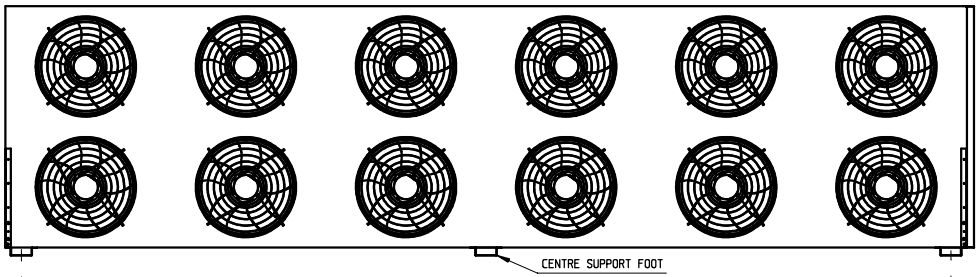

8709.0

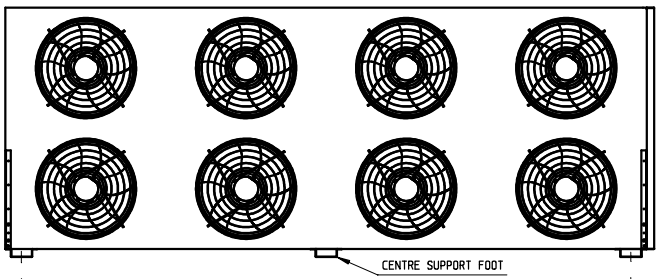

5709.0

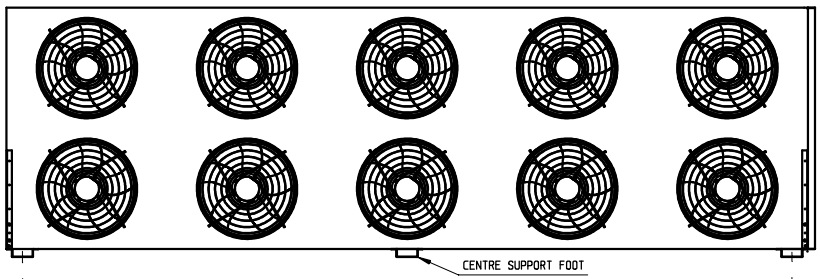

7209.0

C MODULE

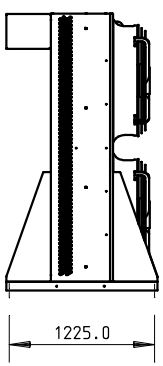

1225.0

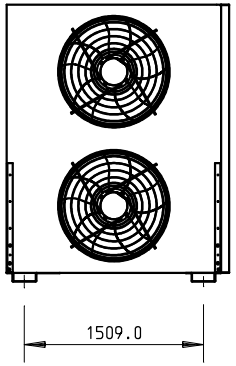

1509.0

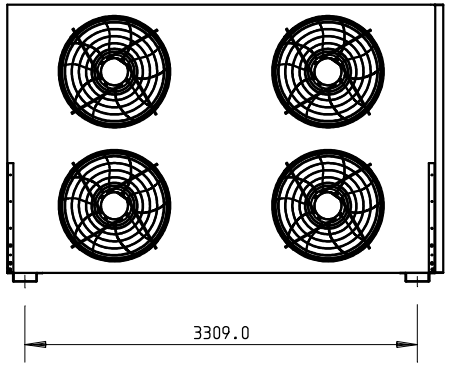

3309.0

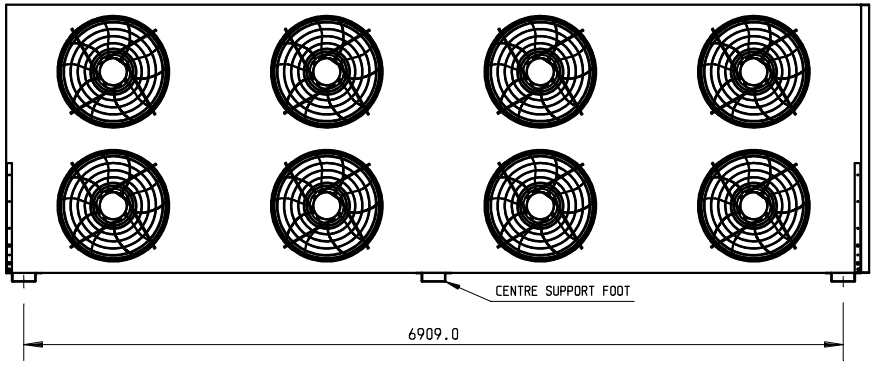

6909.0

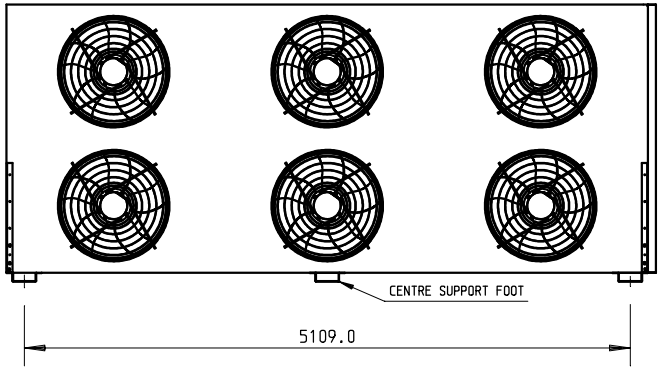

5109.0

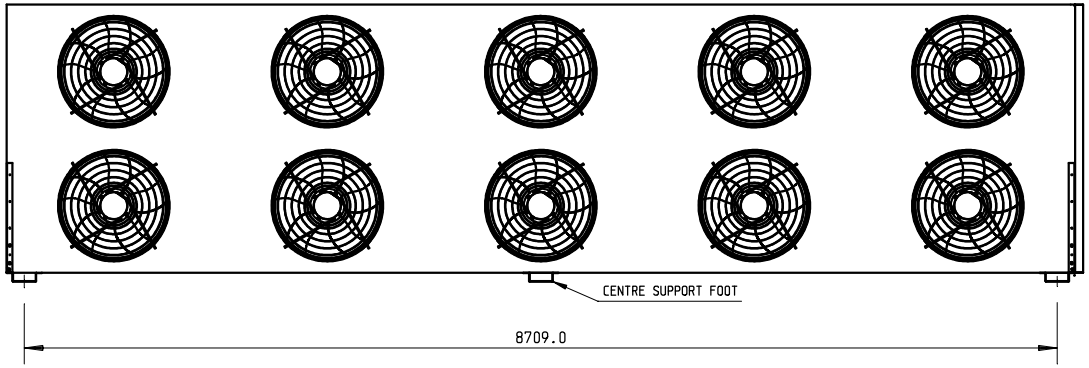

8709.0

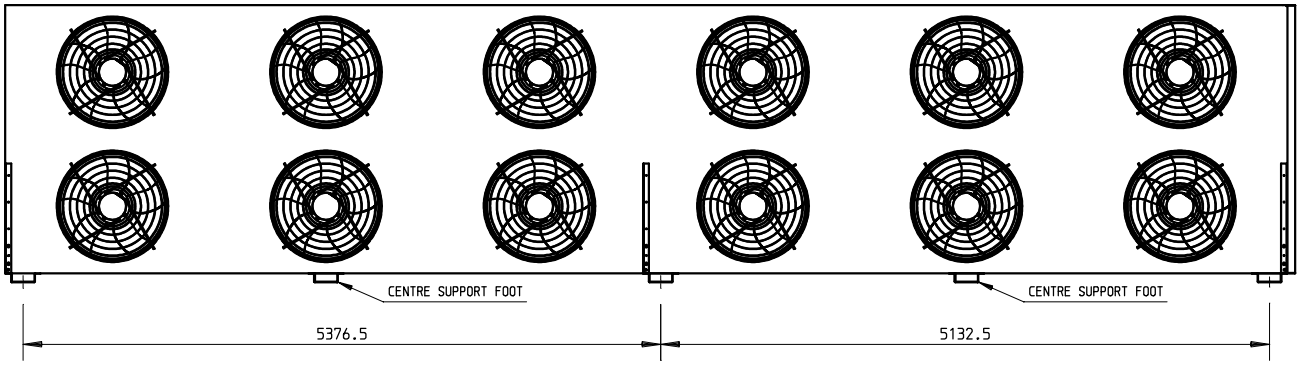

5376.5

5132.5

D MODULE

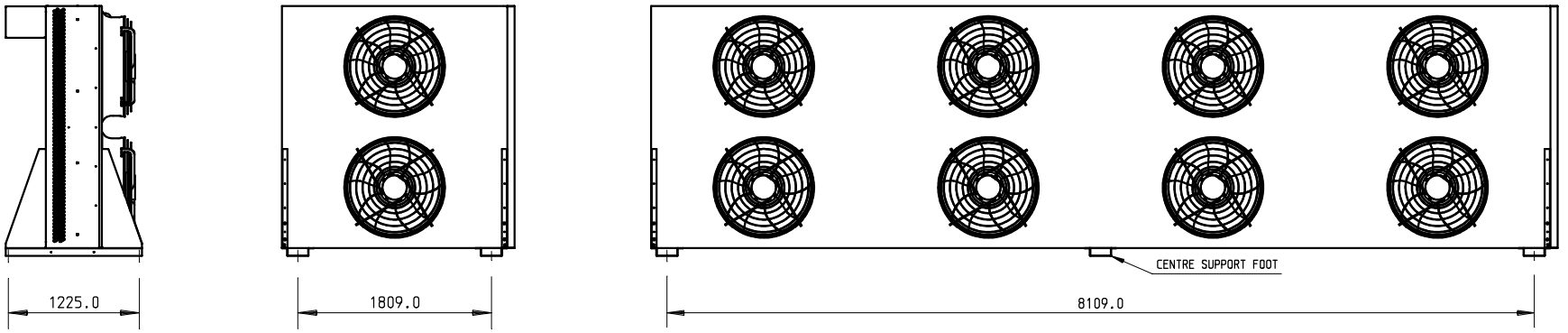
1225.0
1809.0
CENTRE SUPPORT FOOT
8109.0

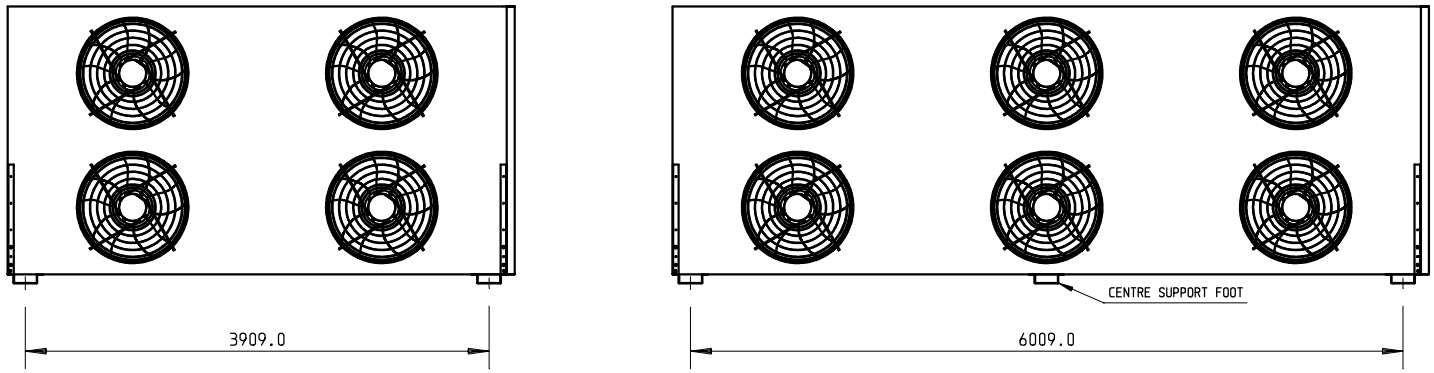
3909.0
CENTRE SUPPORT FOOT
6009.0

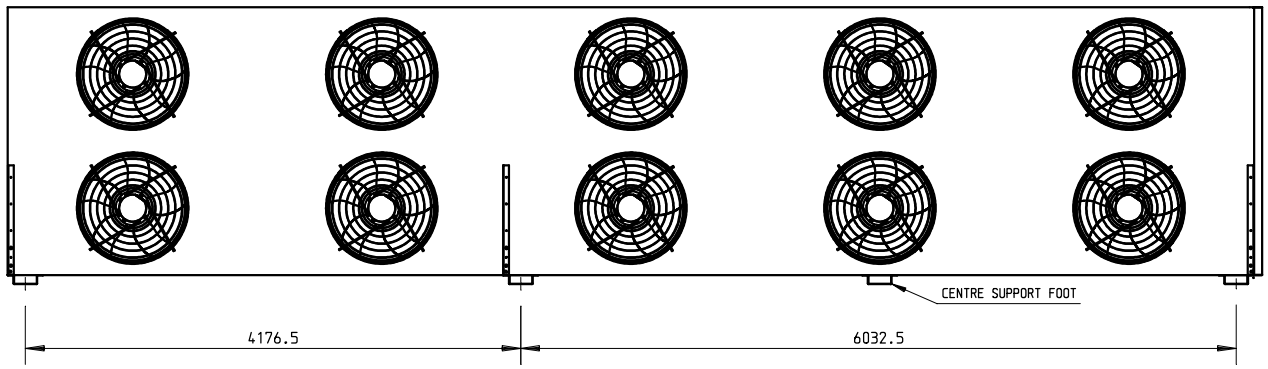
CENTRE SUPPORT FOOT
4176.5
6032.5