

GEA Searle Coolers

Installation and Maintenance Instructions

Content

Important Infomation

1. Health and Safety
2. Warranty Procedure
3. Labelling on Coolers
4. Packaging
5. Loading and Handling
6. Location guidance and Installation
7. Pipework
8. Condensate Drainage & Condensate pump kit options
9. Storage
10. TEV Selection
11. Dual Orifice instruction
12. Evacuation
13. Electrical
14. Wiring diagrams
15. Defrost
16. Coil heaters
17. Initial Starting
18. Maintenance
19. Coil Cleaning
20. Standards
21. Invalidation of Guarantee
22. Dimension drawings and tables

Introduction

This installation and maintenance is intended to accompany GEA manufactured Air Coolers. The coolers are made up of heat exchanger; commonly incorporating aluminium fin material and copper tube, galvanised steel casework and axial fansets. These components will vary with application, but the product function will remain common; to remove energy from a working fluid, generally as part of a refrigeration system. This document is not a replacement for formal training and should only be referenced by qualified personnel (meeting relevant regional standards). Any installation or maintenance work carried out in relation to the supplied air cooler should be in accordance to regional / national law and legislation . Additional information and assistance can be provided by the equipment supplier or from the many GEA regional offices located worldwide.

1. Health and Safety instruction and signs

This concerns the following hazards, which may be encountered when installing and maintaining this equipment:



CAUTION

All work on the units must be carried out by qualified personnel. Installation and maintenance manual must be kept with unit at all times. Ensure that instruction manual is understood before installation Ensure working environment is suitable..

Use suitable PPE (Personal Protection Equipment) as per site regulations and as appropriate for the task. It is the responsibility of the person performing the task and their employer to ensure that all suitable PPE is provided and worn at all times. Detailed below are some of the suggested PPE during installation and commissioning of the unit.



Head protection



Foot protection



Hand protection



High visibility clothing



Eye protection

Before installation



ELECTRICAL VOLTAGE

Ensure that

1. The power supply is isolated before any installation or maintenance work is carried out.
2. The voltage, working fluid and the maximum working pressure stated on the product nameplate is suitable for the working environment.



PROTECTIVE CLOTHING

Sharp edges on the casework of the units and coil fins are a possible cause of cuts to fingers and hands. Appropriate protective clothing /gloves should always be worn.

Ensure that:

- The proposed method of mounting is adequate to support the total operational weight of the unit. "Dry Weights" are given on the nameplate and the product sheet.
- Nameplate Data: When further pressure tests are carried out, the pressure applied shall not exceed 1.3 times the maximum operating pressure (PS) given on the nameplate.
- When ancillary pressure equipment, such as a receiver, is supplied on a frame with a unit, but not a pipe to it, the parts must be treated as separate components and data taken from individual nameplates.
- Rotating blades – dangling items of clothing, jewellery or any items that could be pulled into the fan set are a hazard . Keep a safe working distance from the fan plate
- The fan guard should not be removed nor should the fanset be removed from the unit.

During installation and maintenance, ensure that:

- **The unit is installed and maintained by qualified personnel only.**
- When pressure testing is carried out, the pressure applied shall not exceed 1.3 times the maximum operating pressure given on the nameplate of the unit.
- The temperature of coils with vinyl-coated fins does not exceed 150°C (e.g. during brazing), as toxic fumes would be produced.

Be aware of burn hazard:



Burn hazards

1. Burn hazards from pipes and pipeline components when the heat exchanger temperature exceeds 60°C.
2. Burn caused by refrigerant coming into contact with the skin or eyes.

2. Warranty Procedure

This warranty applies to all units detailed in the price list and, unless otherwise stated in product literature or specific contracts, provides for a manufacturer's guarantee of twenty four months from date of dispatch against faults in workmanship or materials.

When submitting a warranty claim the following information is required:

- Customer's original reference number job / order number.
- GEA Searle's job number / advice note number.
- Type of unit and serial number.
- Date of installation.
- Details of defect.

when providing details of the defect, please give as much information as possible, ie.

- Was the unit satisfactory on delivery?
- Frequency of fault (continuous / intermittent)
- Is the unit leaking ? (+ location of leak)

Items manufactured by GEA Searle :

No work should be undertaken to resolve the problem either by the customer or a 3rd party until approved by Searle – failure to do so could invalidate the warranty.

The item may be replaced or rectified if the guarantee claim is valid.

For items that have been installed, GEA Searle have the right to decide if rectification on site is suitable and who should undertake the work or whether to return / replace the unit(s). For items where Searle decides to replace, the original faulty item must be returned. All items which are returned will be inspected.

If the guarantee claim is not valid the customer will be advised and further instructions requested, either to return the item or to issue an official order to replace or rectify the item.

If you require a replacement product the buyer will be asked to supply a purchase order, when the unit has been returned and evaluated, the buyer will be notified by GEA Searle if the claim is valid.

Items NOT manufactured by GEA Searle:

- The item will be replaced and the customer will be invoiced
- The item will be returned to the supplier for evaluation.
- If the claim is valid the credit received from the supplier will be passed on to the customer.

3. Labelling on Coolers

Labelling on KEC, KMe, TEC, DSR, LSR, SM

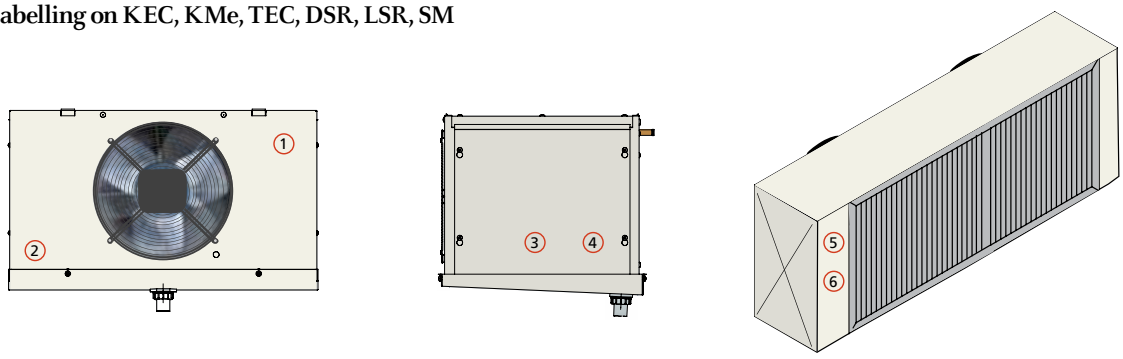

Labelling on FM

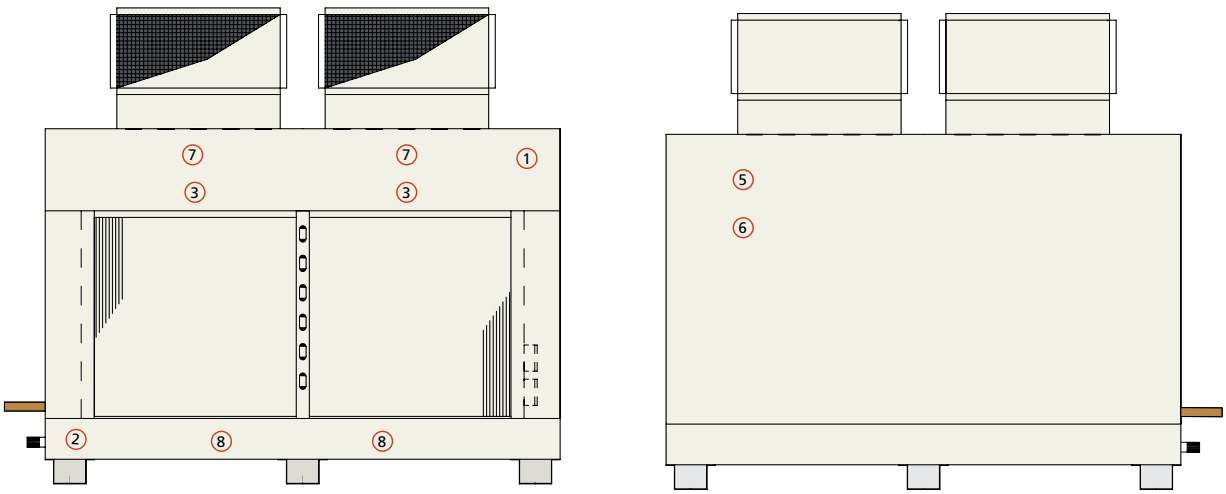

3. Labelling on Coolers

Searle

1. Searle logo

GEA

2. GEA logo

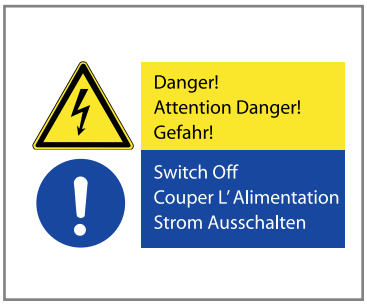

3. Danger and Caution labels



4. Passed label

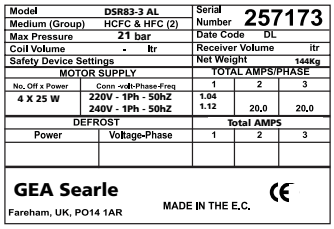

5. Name Plate

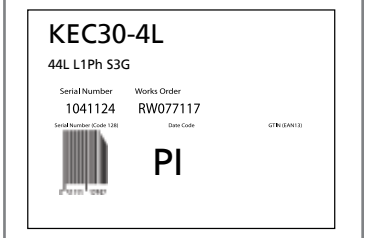

6. Plate label



7. Fork lift points

FAN No. 1

8. Fan numbering label

Maximum operating pressure suitable for this product.

Fluid working group. Reference to PED classification, i.e. group 1 or group 2

Electrical supply information

If no safety device settings are detailed, it is the installers' responsibility to ensure an appropriately sized safety device is installed to prevent the product going over its maximum pressure rating. Failure to do so may result in component / product failure.

Model	DSR83-3 AL	Serial Number	257173	
Medium (Group)	HCFC & HFC (2)	Date Code	DL	
Max Pressure	21 bar	Receiver Volume	itr	
Coil Volume	- ltr	Net Weight	144Kg	
Safety Device Settings		MOTOR SUPPLY	TOTAL AMPS/PHASE	
No. Off x Power	Conn -volt-Phase-Freq	1	2	3
4 X 25 W	220V - 1Ph - 50hZ 240V - 1Ph - 50hZ	1.04 1.12	20.0	20.0
DEFROST		Total AMPS		
Power	Voltage-Phase	1	2	3

GEA Searle

Fareham, UK, PO14 1AR

MADE IN THE E.C.

4. Packaging

Please pay attention to following symbols which can be identified on GEA Searle packing cartons.



Keep dry

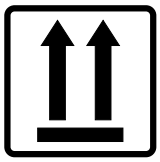

This way up



Fragile

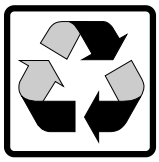

Recycle

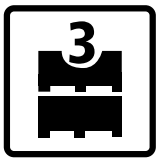

Stacking



Wooden crate:

- GSL wooden crates incorporate heat treated timber as appropriate aligning with export requirements.
- Care should be taken when removing units from packing to ensure unit is not damaged

5. Loading & Handling

Appropriate equipment should be used to load, un-load and locate the unit in its operational location. Consideration of the products size and weight should be taken ensuring that any equipment (such as fork lifts) meets relevant national standards.

1. For transportation of unit coolers is inverted and bolted to the base of the packing case, Care must be taken while removing the packaging and installing to prevent damage, particularly of the finned coil.

2. The drainpan is fitted to the unit (in its transit/lifting position) for transportation. Remove the draintray by removing the four fixings and then fit the hexagonal drain connection and gasket into the hexagonal well inside the draintray. Hand tighten this assembly using the knurled nut on the outside.

3. Refit the draintray in its transit position (fixings loose) making use of the slots in the tray so that it moves into contact with the underside of the cooler bottom plate so that the weight is transferred directly to the chassis of the unit when lifting into position.

Note: for industrial coolers the points detailed above do not apply.







Forlklift





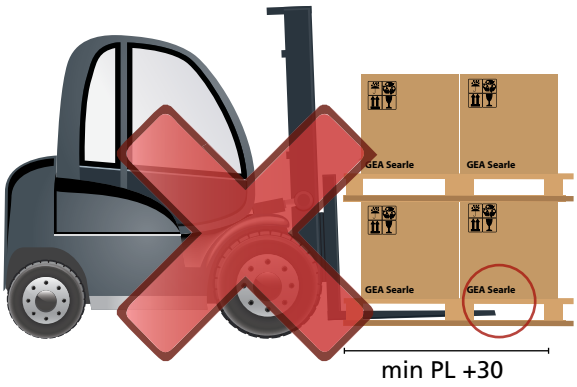

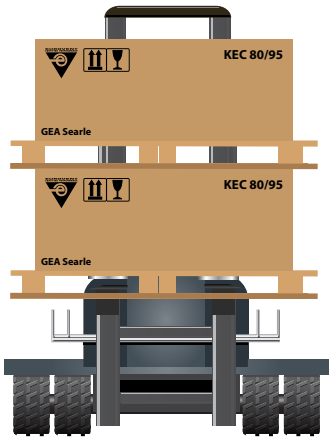

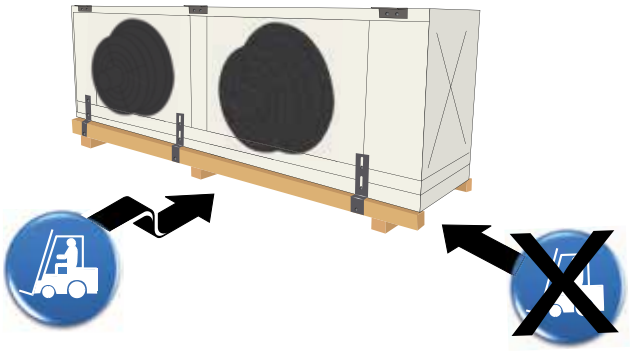

1. All large units have recommended points for use when fork or strop lifting, both are clearly marked.
2. Care should be taken to protect the unit against mechanical damage while unloading.
3. Extreme care must be taken to protect coil connections and fins.
4. **Upon receipt, the units should be visually inspected and the supplier notified (within seven days) of any damage or shortages.**

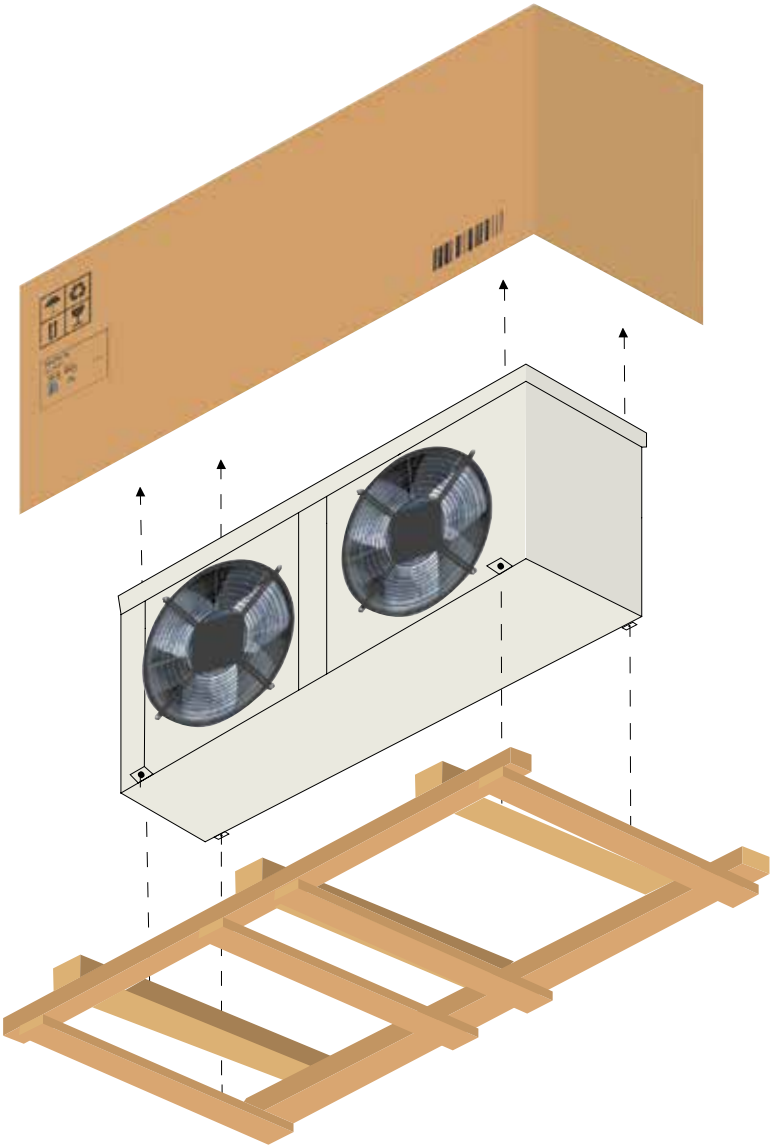

Unpacking KEC and KMe

1. Remove the box/crate packaging

2. On most KEC units remove the draintray by removing the four fixings and then fit the hexagonal drain connection and gasket into the hexagonal well inside the draintray. Hand tighten this assembly using the knurled nut on the outside. When the cooler is in position ensure that the drainpan is dropped down into the operating position before tightening its fixings. For the KMe units will have a cable tie fixing the draintray along the side of the unit

3. Place into position using the location guidance.

Unpacking DSR and LSR

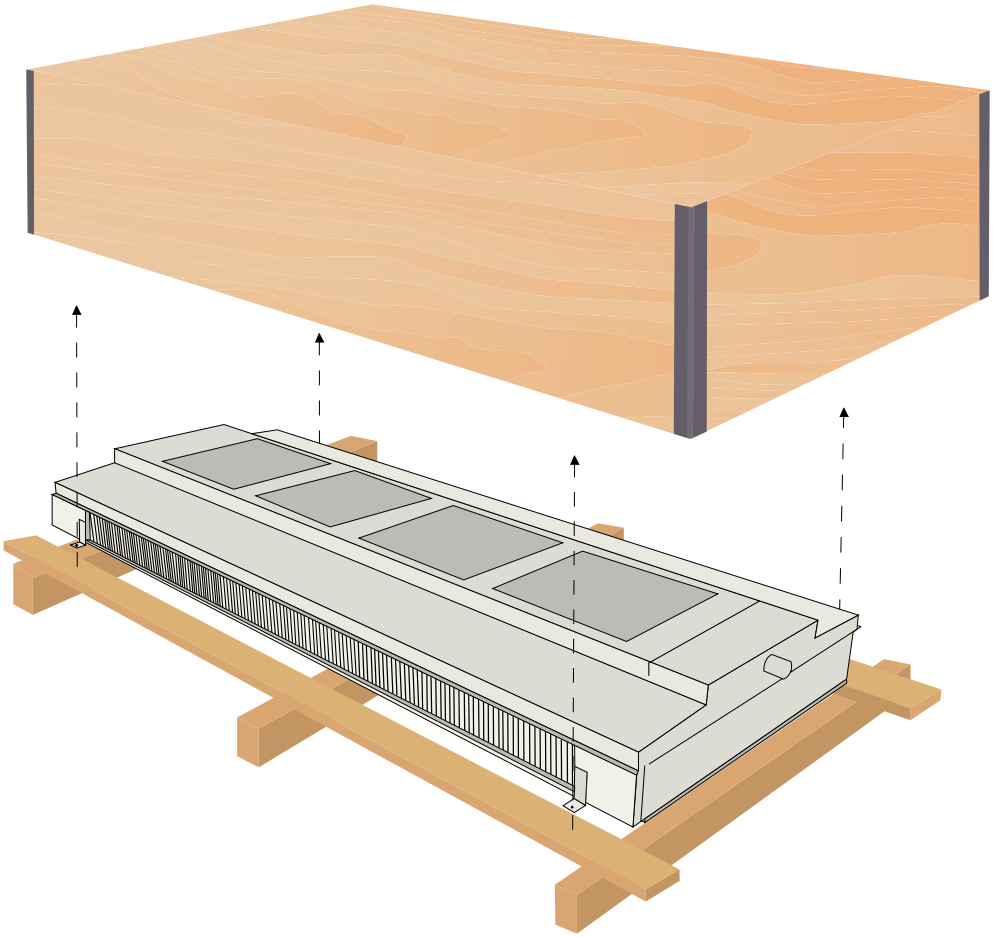

1. Remove crate packaging/plastic wrapping

2. On all DSR and LSR units the draintray is already fitted, remove the four fixings securing the unit to the wooden pallet and place into position using the location guidance.

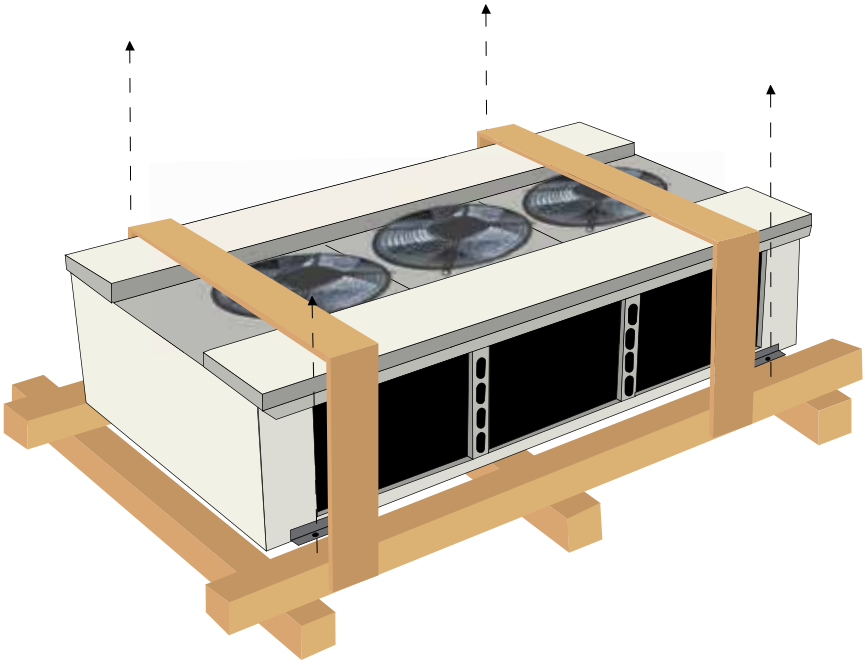

Unpacking SM

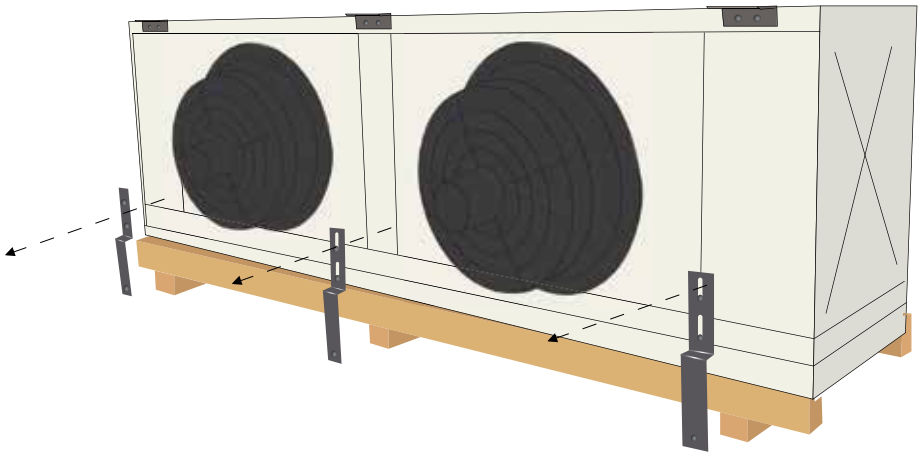

1. Remove plastic wrapping

2. On all SM units the draintray is already fitted, remove the fixings/metel brackets securing the unit to the wooden pallet. Place into position using the location guidance

Unpacking TEC

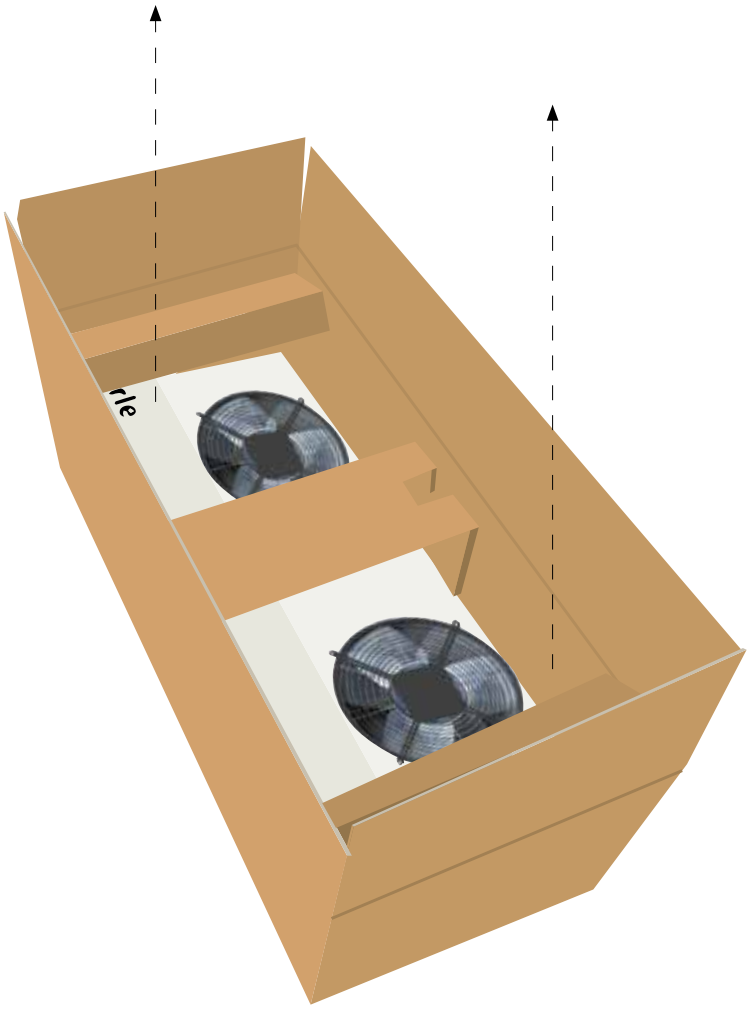

The location of the unit should be carefully selected to ensure that:

1. Air distribution from the cooler is not adversely affected by obstructions and is appropriate for the size and shape of the room, optimum air distribution should be targeted. Product loading must be in accordance with good refrigeration practice.

2. Air entering the cooler is not obstructed

3. The unit must be installed level in both directions

4. Maintenance access should be considered when locating the product, including adequate space for heater withdrawal when appropriate

5. The unit is not subjected to physical loads

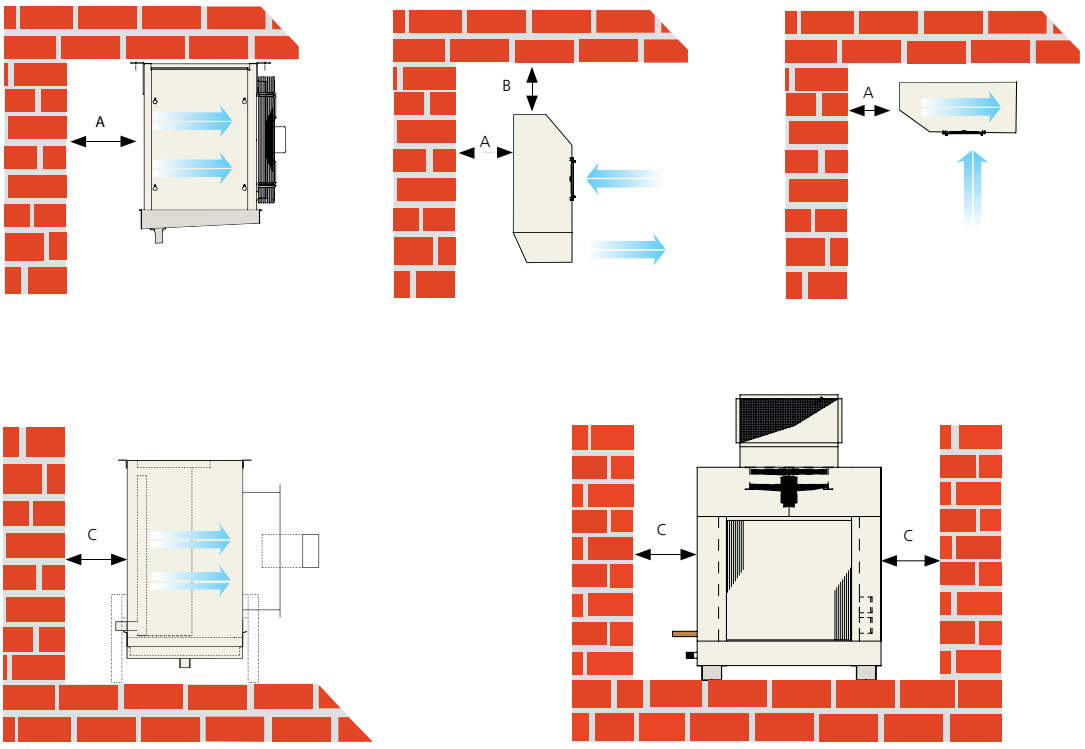

Model	A	B	C
	mm	mm	mm
TEC all models	120	120	-
KEC all models	275	-	-
KMe all models	400	-	-
DSR all models	275	-	-
LSR all models	275	-	-
SM 16	800	-	800
SM 20	1000	-	1000
SM 24	1200	-	1200
SM 30	1500	-	1500
FM all models	-	-	2000

Mounting the unit

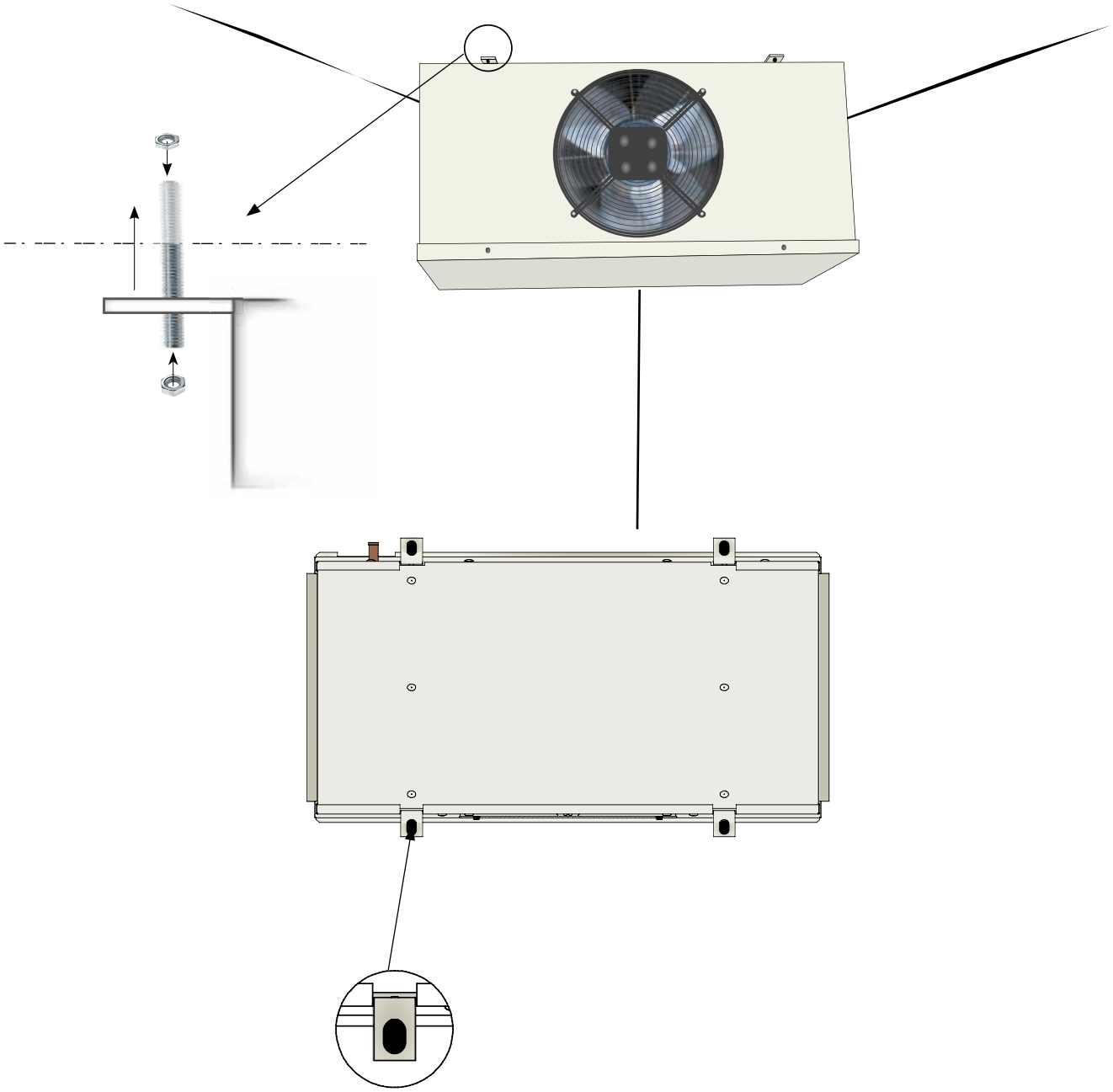

Warning
In case of improper installation, leak of working fluid can occur during operation of the cooling equipment, this can lead to injuries or damage to yourself or property.

1. On all coolers mounting slots are provided, make sure the location guide is observed before you hang the unit
2. Only fix the unit using the mounting slots provided (refer to unit dimension drawings for slot measurements)

Mounting a TEC

1. TEC's that are wall mounted an additional drainpan needs to be fixed to the cooler (**a kit is available separately).**

2. This is achieved by removing the panel fixing screws around three sides of the air-off face, offering up the vertical drainpan and replacing the screws through the holes in the drainpan, securing it in place.

3. The blanking piece provided should be fitted in the original drain position. If defrost is required on wall mounted units, refer to fitting instructions below.

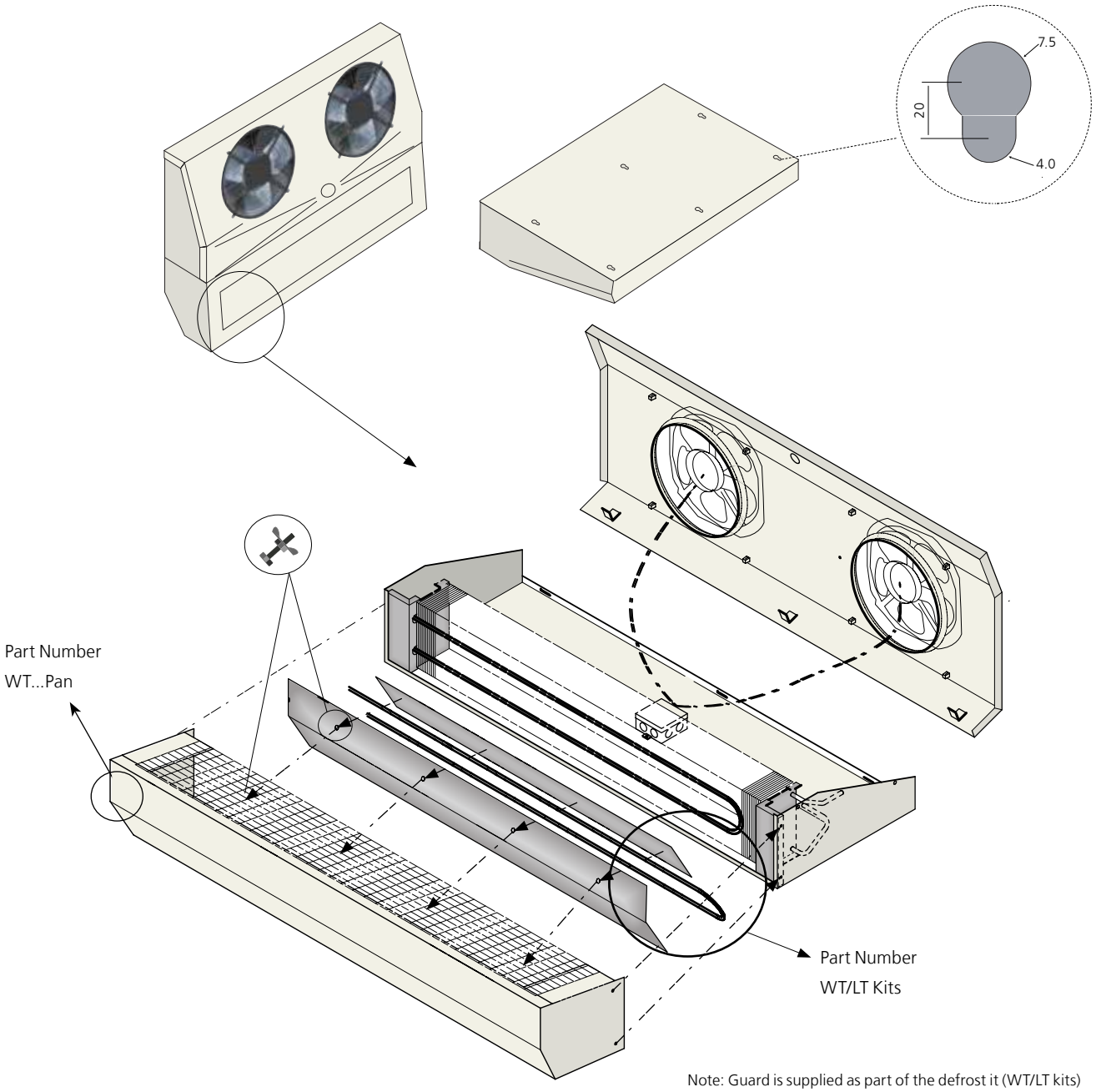

Note: Guard is supplied as part of the defrost it (WT/LT kits)

7. Pipework

Pipework to and from the cooler should be suitable for:

- Working fluid (guidance can be provided by GEA representative or pipe suppler)
- Atmospheric conditions
- Maximum operating pressure including relevant safety factor



Damage caused by incorrect installation will invalidate the manufacturer's warranty obligations.

Pipework to and from the coolers should be selected to suit the application and not the connection size of the unit. Pipework sizes should be selected to ensure pressure drop does not exceed an equivalent of 2K at full load conditions. Pipework should be supported independently from the cooler unit in a way that prevents the transmission of vibration to the units. A qualified engineer should install the refrigerant pipework to a high standard of refrigeration practice. All pipework used must be clean and to refrigeration quality, all cuts should be made using a pipe cutter, never a hacksaw, and care must be taken to remove all burrs and swarf.

Braze using silver bearing brazing rod and ensure that all joints are cleaned before brazing. During brazing care should be taken to ensure that all components near joints should not be excessively overheated, a wet cloth should be applied where necessary. Dry nitrogen should be passed through the pipework during brazing to minimise oxidisation.



WARNING!
Use appropriate PPE (personal protection equipment) during pipework, refrigerant charging and commissioning. During brazing ensure the temperature of coils with vinyl coated fins does not exceed 150°C as toxic fumes would be produced

When brazing and leak testing are complete the suction line should be insulated with 3/4" thick Class 'O' insulation. The unit has been thoroughly tested during manufacture however after on site brazing is complete all pipework should be pressure tested for leaks to maximum of 1.3 capacity pressure

Be aware of the below hazards during pipework and refrigerant charging:



Frost burns



Heat burns



Cuts or Wounds



Inhalation

In the event of injury, seek medical attention immediately.

It is the responsibility of the installer to ensure piping to and from the condenser is suitable for the application, although guidance from your GEA representative can be provided.

Unless otherwise specified, twin section units should be connected in parallel to each other, not in series; failure to do so will result in excessive fluid pressure drop and a corresponding loss in performance.

All pipework and fittings should be pressure tested upon installation completion in accordance with relevant regulations or legislations. Any pressure test should not exceed the units' maximum operating pressure or the pressure rating of any safety devices.

8. Condensate Drainage & Condensate pump kit options

In most cooler units once the unit is in place the drain tray MUST slope downwards towards the drain connection. Ensure that drainline size is equivalent to that of the drain connection and that it has an adequate fall. It is essential that the drainline includes a trap, fitted outside the coldroom. Easy disconnection of the drainline will ease cleaning and the replacement of tray heaters and fan sets.

On the KEC and KMe the fixings at the rear of the drain tray should be loosened to allow the back of the drain tray to drop into it's operating position. The drain connection is 1" BSP (M) nylon on the KMe and KEC and should be hand tightened when connected to the drain. Ensure that drainline size is equivalent to that of the drain connection and that it has an adequate fall.

Condensate pump kit options

The condensate pump option is only available on high tempeature units as a factory fitted item or can be bought as a spare. The Pump kits are to the DSR and LSR units. Please see below fitting instruction guides.

DSR Condensate pump instructions

1. Remove the end panel of the cooler.

2. Fit the sensor to the bracket and fit pump and sensor bracket as shown in the diagram, ensuring the brackets are pushed right down.

3. Extend the discharge line with 6mmID hose as required.

4. Insert the Rubber Bung in the sump drain outlet with a blunt instrument.

5. Connect the electric cable to single phase, 50Hz 230V mains supply.

Note

- Clean the Sump and Pump filter 1 week after installation, then at least 4 times a year thereafter.
- Pump is fitted with 3 minute (approx) run on timer, activated when float returns to bottom position.
- Pump overload must be reset by interrupting the power suppy.

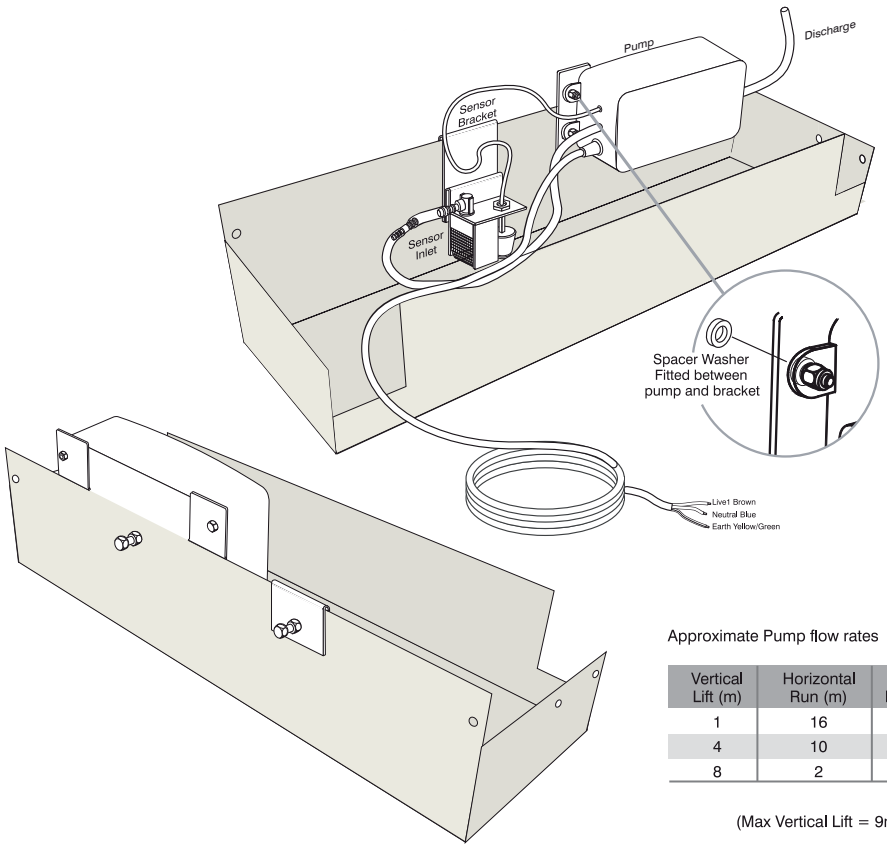

Approximate Pump flow rates

Vertical Lift (m)	Horizontal Run (m)	Flow Rate (l/hr)
1	16	16
4	10	13
8	2	10

(Max Vertical Lift = 9m)

9. Storage

1. To avoid contamination and corrosion, the units must be stored in dry and clean area.

2. Storing for long periods is not recommended, but where this cannot be avoided the fan motors must run for a minimum of 2 hours per month. **Failure to do so will invalidate manufacturer's warranty.**

General

Upon receipt, the units should be visually inspected, any transport damage and / or missing parts must be recorded on the delivery note and the manufacturer notified in writing within seven days . **Please ensure:**

- The pipework shows no signs of damage
- The fanset / motor terminals box lids are not cracked or showing signs of obvious damage
- The electrical screw terminals in control panels and motor mountings should be checked for security.

3. Units are not portable and are only for permanent installation.

The units are delivered with a 1 bar holding charge (N2) which should be safely released through the schraeder valve on the gas inlet header before removing the brazed header / manifold caps.

4. If the holding charge is not present the manufacturer should be contacted immediately.

5. Units that have been packed in cardboard must be stored in a dry environment to prevent any water damage

Damage caused by incorrect installation / unit mis-handling will invalidate the manufacturers warranty

10 . TEV Selection

TEV Selection for DSR, LSR, SM, FM

It is important that the TEV is correctly sized and, for maximum performance, located within 100mm of the distributor inlet. The TEV size should be determined using the maximum operational capacity and the minimum valve pressure drop. This occurs at the minimum condensing pressure. An externally equalised TEV must be used. When calculating the minimum TEV pressure drop, allowance must be made for the cooler's distributor system. For units with inlet sizes of less than 7/8" this allowance is 2.0 bar for R134a, or 3.0bar for R22, R404A, R407/B/C, and R507. Units with inlets of 7/8" or larger may be fitted with 'Dual Orifice' distributors (Please see part 11 for instructions on Dual Orifice)

TEV Selection for KEC, KMe, TEC

It is important that the TEV is correctly sized. The TEV size should be determined using the maximum design capacity and the minimum valve pressure drop. This occurs at the minimum condensing pressure. An externally equalised TEV must be used. When calculating the minimum valve pressure drop, allowance must be made for the cooler's distributor system.

R404A, R407C, R410A, R507A , R744	1.5 bar
R134a	1.0 bar

On models TEC1, TEC2 and TEC3 an internally equalised TEV may be used. On units TEC3.5 to TEC8 an externally equalised TEV must be used and an allowance of 1 bar for R134A and 1.5 bar for R404A, R407C, R410A and R507A should be made for the pressure drop across the distribution system.

11. Dual Orifice

The interchangeable Orifice Distributor is an improvement on the standard flange mounted type in that:

- Each distributor is fitted with a dual orifice assembly.
- Each distributor has a screwed cap to facilitate orifice selection.
- Each distributor has a Schraeder valve to facilitate pressure testing during operation.



WARNING!
Goggles must be worn when using the test connection as there may be liquid refrigerant in the distributor body cavity.

System performance

The performance of any system fitted with this type of distributor, can still be influenced by the TEV. When selecting a TEV, allow for the following distributor system pressure drop.

For R134a 2 bar
For R404A,R407A/B/C,R507A 3 bar

IMPORTANT! When removing or replacing the distributor screwed cap, do not place excessive strain upon the distributor leads.



WARNING!
Before removing the distributor cap ensure that all liquid refrigerant has been evacuated from this point by carefully pumping the system down

If, when the coil is operating at or close to its design temperature, the TD is above normal, that is to say, the difference between the air entering the coil and the evaporating temperature is too great (e.g. the evaporating temperature is low), check the TEV superheat. If it is above 0.9 TD and will not respond to adjustment, it is possible that the distributor pressure is excessive.

To establish the pressure drop, pump the system down and fit a service gauge to the 1/4" flare connection on the distributor cap. Restart the system. The difference between the pressure at at the distributor and the suction pressure is effectively the 'pressure drop' . Using the graph below plot the pressure drop value on the requisite curve. The solid portion of the curve represents the operating band of the device.

If the value falls outside this band, plot downwards from this point to determine the ratio. Multiply the diameter of fitted orifice by this ratio and the resultant is the diameter of the orifice required. If the larger of the two orifices is oversize, drill out the smaller orifice to suit. Always drill undersize then recheck the pressure drop to determine whether further enlargement is necessary. If the pressure drop is within upper limits of the curve (solid portion) but the TEV is unstable, the orifice must be further enlarged to bring the pressure drop closer to the normal operating point.

Note

An extreme measure can be to discard the orifice assembly entirely. If the problem still persists, it is possible that the TEV is either faulty, undersized or lacks sufficient refrigerant liquid subcooling. These faults must be corrected before adjustments can be made to the distributor system.

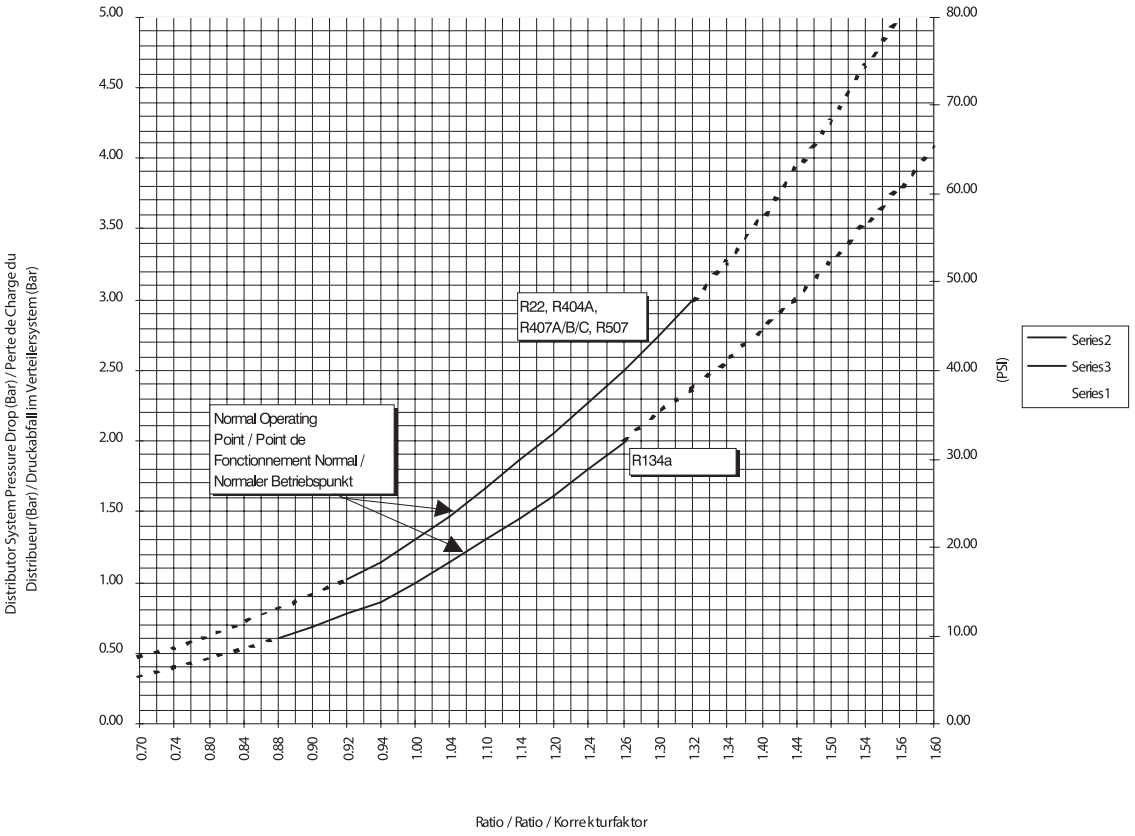

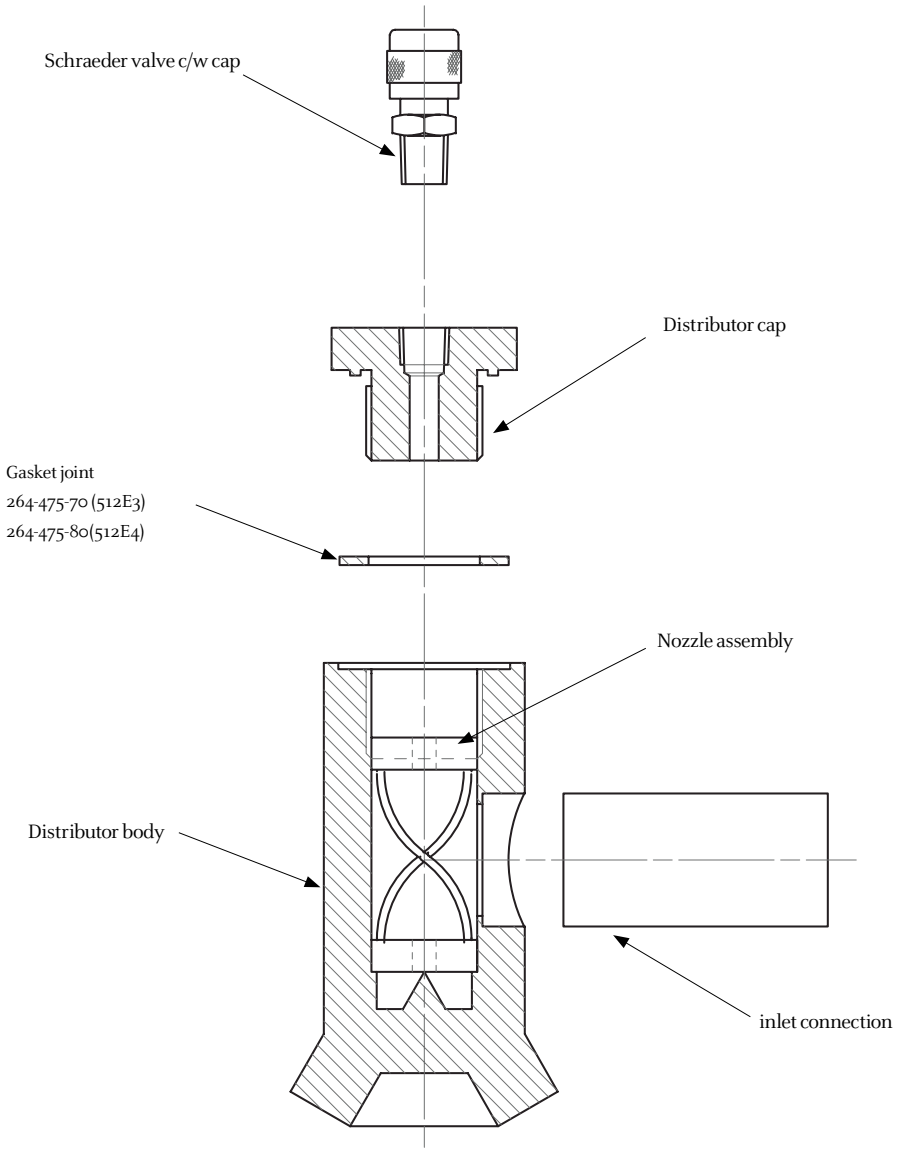

12. Evacuation

Fluid coolers using water or water-based solutions must be protected by adding anti-freeze in sufficient concentration, as it is not possible to drain the system completely.

Note: The heat transfer properties of a fluid vary with the concentration of additives.

Evacuate the system in accordance with standard refrigeration operating procedures, codes and regulations



ELECTRICAL VOLTAGE

Ensure that

1. The power supply is isolated before any installation or maintenance work is carried out.
2. The voltage, working fluid and the maximum working pressure stated on the product nameplate is suitable for the working environment.

If residual current or earth leakage protection devices are to be used in the supply, appropriate sensitivity levels should be used. Up to 300 mA trip level may be required to avoid nuisance tripping, particularly with inverters. If greater protection is required then this can be provided for individual circuits.

Electrical connection is to individual motor terminal boxes, or a unit terminal box or control panel., Wiring instructions are provided within this document. Generally `cage clamp' type terminals are used. Pushing a correctly sized screwdriver into the square aperture adjacent to the conductor entry opens the terminal.

It is the installer's responsibility to ensure cable entry is fit for purpose and that where appropriate cable support is applied. Care should be taken to ensure the box IP rating is not compromised by the electrical supply cable entry.

Conductors between 1 and 2.5mm² are accommodated. Where wiring is to a motors individual terminal box the facility for additional casework earth points are provided. When motor wiring is routed within the unit side covers, earth studs are provided under these covers for additional earth points on the casework. All AC single-phase motors have automatic internal overload protection, and can be used in conjunction with a high quality `triac' type speed controller. Some three phase AC motors are also fitted with internal thermostats, wired back to their terminal blocks (TK). Check that the fan rotation of 3 phase units is correct.

Reversing any two phases of the 3 phase AC motor supply can change the rotation. Reversing two phases of the EC motors won't change the rotation. In optional AC fan Contactor boxes the fan contactors are energised through these auto-reset, normally closed, thermo¬stats. When internal thermostats are not used three phase motors MUST be protected against overload and single phasing. Overloads must be set to cut out at FLC + 10% (FLC + 15% at -30°C) Failure to comply will render motor warranties void.

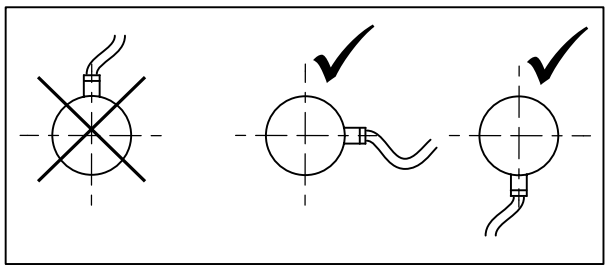

GEA Searle would recommend as general rule that each cable or group of cables will be supported at no greater than 500mm intervals; but if national legislation recommends otherwise this should be followed. Cable size is determined by the motor current, with the necessary deration for unit operating temperature. High Temperature cable is used where necessary. It is the responsibility of the installation contractor to ensure the complete installation is appropriately electrically tested according to national legislation.

Terminated Units

If no isolator is on the unit it is the installers' responsibly to ensure appropriate isolation is incorporated within the system. With or without unit isolation; it is the installers' responsibility to provide over and short circuit protection for the installation.

Controls

Control options are supplied according to customer specification. Individual instructions are provided to guide the setting and use of control options. When a control option is specified, the unit will contain the necessary equipment to isolate and provide over current and short circuit protection for the unit.

Wiring Diagrams and Documentation

Wiring diagrams and other relevant documentation will either be supplied in the units' junction box or in this document

Wiring diagrams for KEC, KECX, KECP

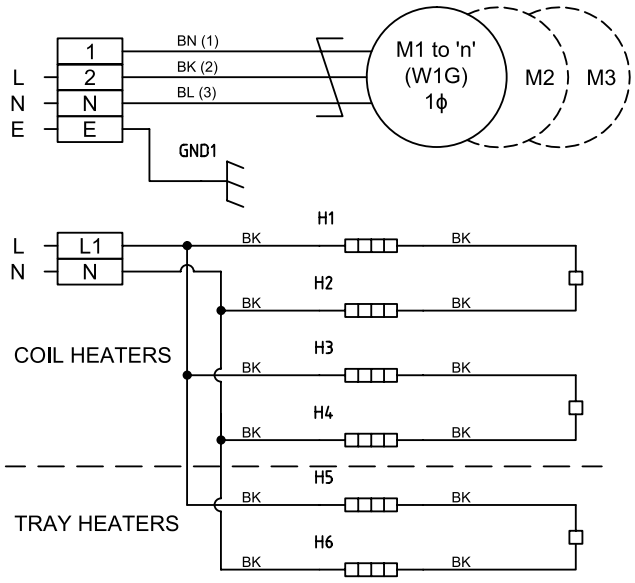

271-111-145

KEC 10, 15, 20, 35 & 55-LV (FAN & DF)

Note:

1. Supply 230V - 1Ph - 50Hz.
2. Applies To KEC Range Only:
   - KEC 10
   - KEC 15
   - KEC 20
   - KEC 35
   - KEC 55-Lv
3. High Speed: Connect Supply To Terminal Block Terminals 2 and N.
4. Low Speed: Link Terminal Block Terminals 1 & 2.
5. Defrost Heaters (If Required).
6. Terminal Box: 218-901-013.

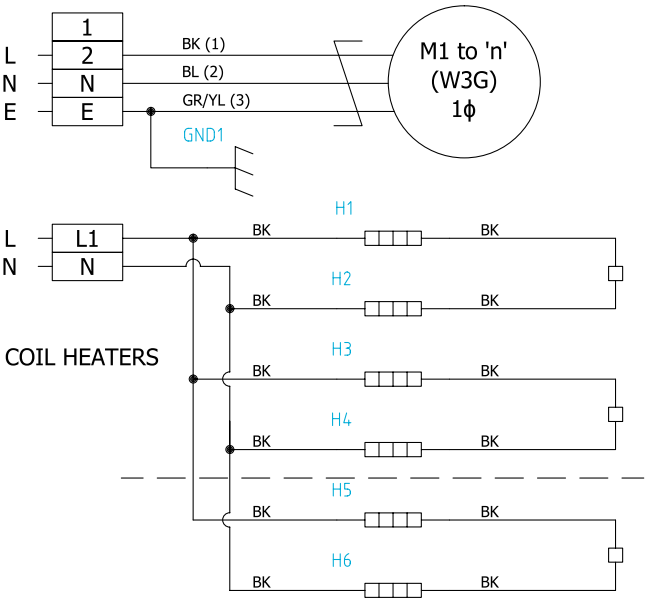

271-111-146

KEC 25 & 30 (FAN & DEFROST)

Note:

1. Supply 230V - 1Ph - 50Hz.
2. Applies To KEC Range (Single Fan Only):
   - KEC 25
   - KEC30
3. Defrost Heaters (If Required).
4. Terminal Box: 218-901-013.

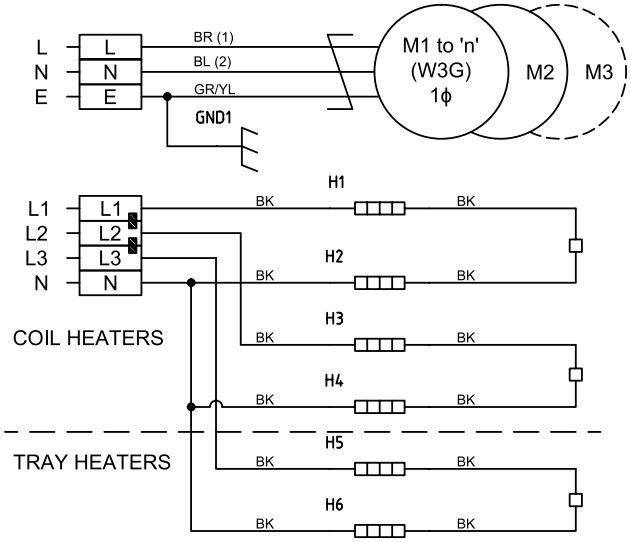

271-111-148

KEC 40,45,55 & 70 (FAN AND DF)

Note:

1. Fans Supply 230V - 1Ph - 50Hz.
2. Defrost Heaters Supply Option 230V - 1Ph - 50Hz Or 400V - 3Ph - 50Hz.
3. Remove Links Before Connecting 3Ph Supply.
4. Applies To KEC Range Only:
   - KEC 40
   - KEC 45
   - KEC 55
   - KEC 70
5. Defrost Heaters (If Required).
6. Terminal Box: 218-901-014.

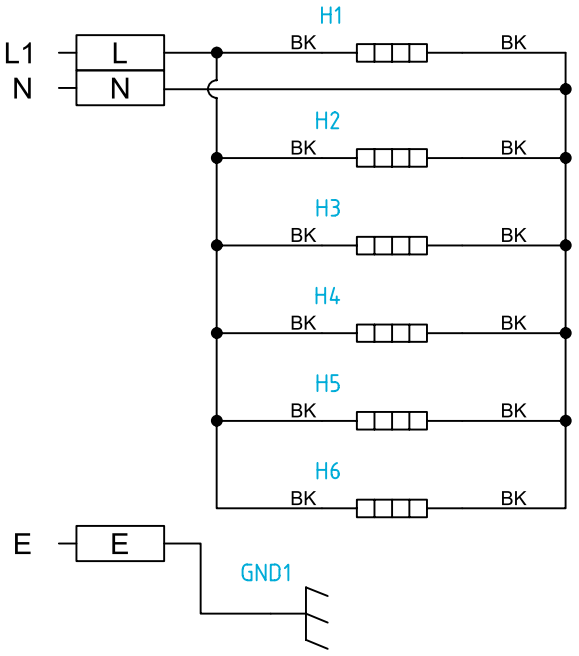

271-111-150

KEC 15 (115V DEFROST HEATERS)

Note:

1. Defrost Heater Supply 115V -1PH - 60Hz.
2. Applies to kec 15 (115v defrost heaters) only.
3. For Fan Arrangement:
   - REF. DRG. 271-111-149
4. TERMINAL BOX(s): 218-901-014-D

Wiring diagrams for KMe, KMCX, KMCP

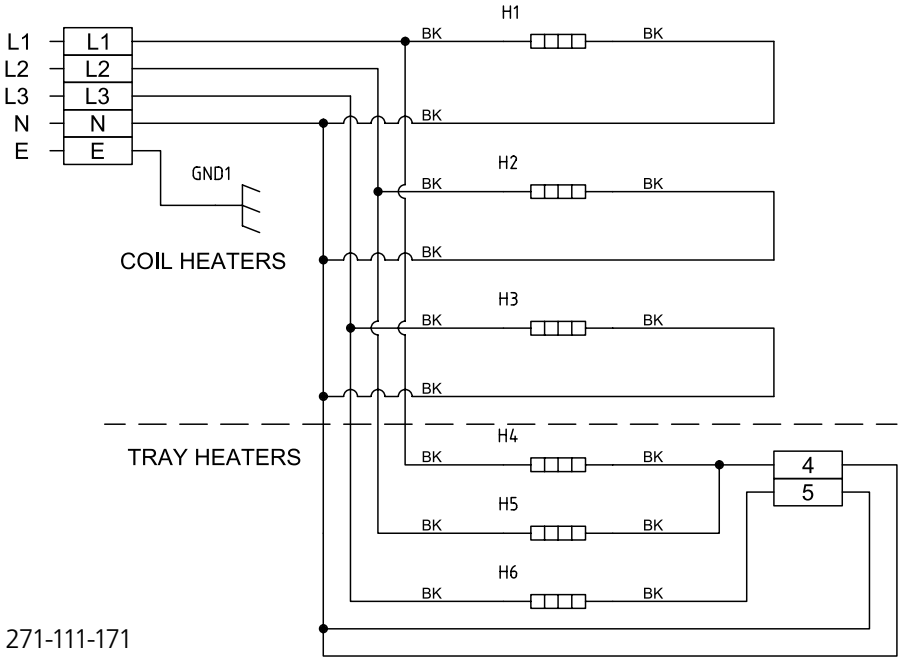

271-111-171

KMe 50-95 (DEFROST HEATERS)

Note:

1. Defrost Heater Supply 400V - 3Ph - 50Hz.
2. Applies To KMe Range Only.
   - KMe 50-95
3. For Fan Arrangement - Ref. Drg. 271-111-125.
4. Terminal Box(S): 290-660-W; 290- 661-W.

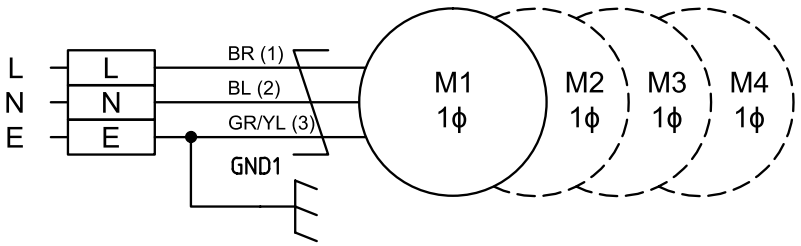

271-111-124

KMe 50-175 (1 PHASE FAN SUPPLY)

Note:

1. Fan Supply 230V - 1Ph - 50Hz.
2. Applies To KMe Range Only.
   - KMe 50-60 1 Fan.
   - KMe 80-95 2 Fans
   - KMe 115-140 3 Fans
   - KMe 175 4 Fans
3. For Heater Arrangement:
   - KMe 50-95 - Ref. Drg. 271-111-171
   - KMe 115-175 - Ref. Drg. 271-111-172
4. Terminal Box(S): 190-631-W(2F); 190-632-W(3F); 290-633-W(4F); 290-641-W(1F).

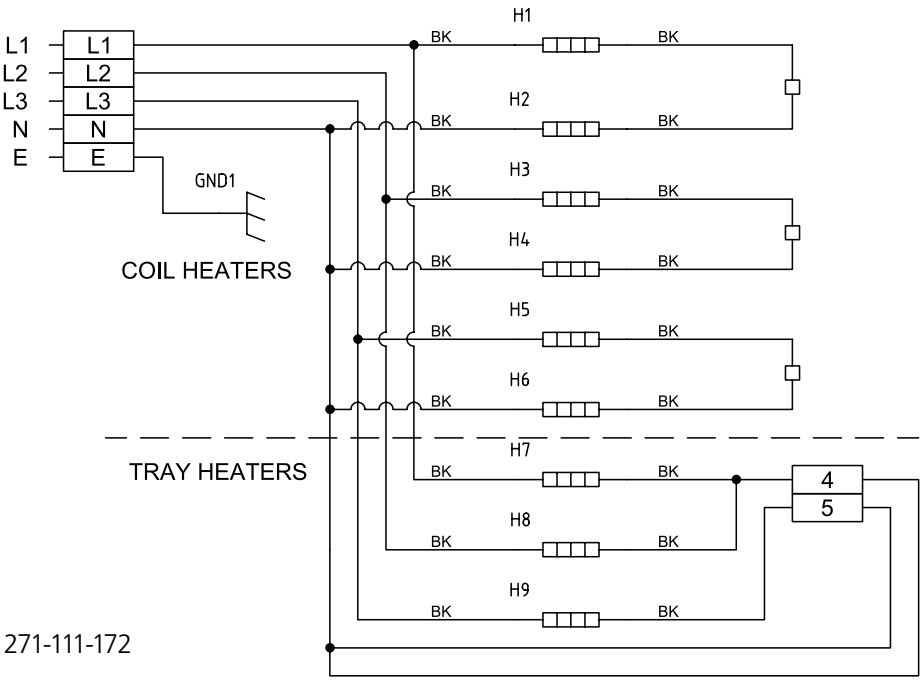

271-111-172

KME 115-175 (DEFROST HEATERS)

Note:

1. Defrost Heater Supply 400V - 3Ph - 50Hz.
2. Applies To KMe Range Only.
   - KMe 115-175
3. For Fan Arrangement - Ref. Drg. 271-111-125.
4. Terminal Box(S): 290-660-W; 290-661-W.

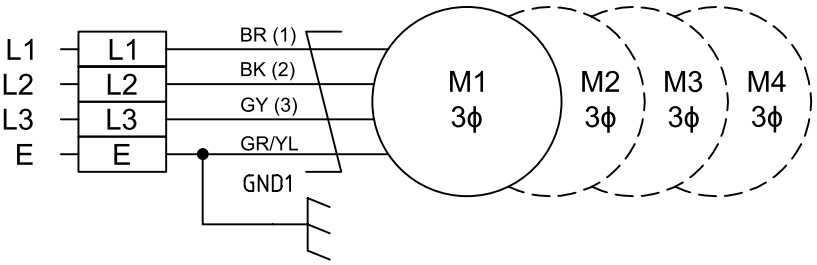

271-111-125

KMe50-175 (3 PHASE FAN SUPPLY)

Note:

1. Fan Supply 400V - 3Ph - 50Hz.
2. Applies To KMe Range Only.
   - KMe 50-60 1 Fan.
   - KMe 80-95 2 Fans
   - KMe 115-140 3 Fans
   - KMe 175 4 Fans
3. For Heater Arrangement:
   - KMe 50-95 - Ref. Drg. 271-111-171
   - KMe 115-175 - Ref. Drg. 271-111-172
4. Terminal Box(S): 290-634-W(2F); 290-635-W(3F); 290-636-W(4F); 290-642-W(1F).

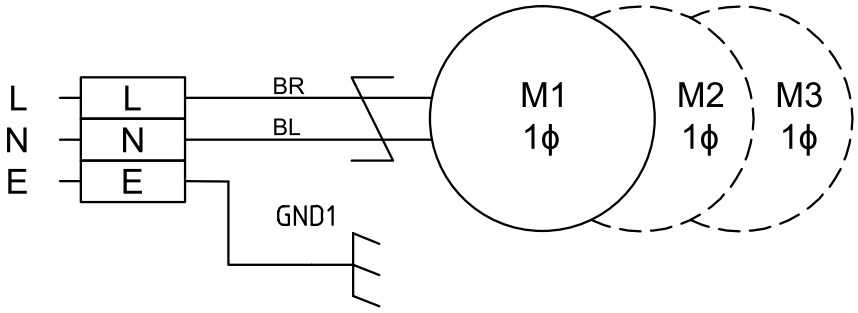

271-111-450

TEC (1 PHASE FAN SUPPLY)

Note:

1. Fan Supply 230V - 1Ph - 50Hz.
2. Applies To TEC Range Only.
   - TEC 1-3.5 1 Fan.
   - TEC 4-5 2 Fans
   - TEC 7 & 8 3 Fans
3. For Heater Arrangement:
   - Ref. Drg. 271-111-451
4. Terminal Box(S): 44-10-602-W; 110-621-W.

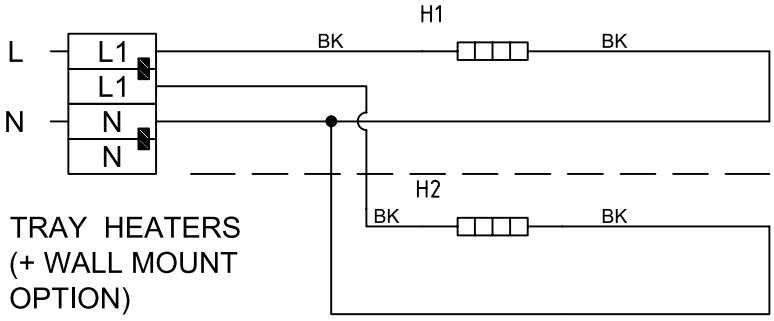

271-111-451

TEC DEFROST HEATERS

Note:

1. Supply 230V - 1Ph - 50Hz.
2. Applies To TEC Range Only.
3. For Fan Arrangement:
   - Ref. Drg. 271-111-450.
4. Terminal Box(S): 218-143-110.

Wiring diagrams for DSR

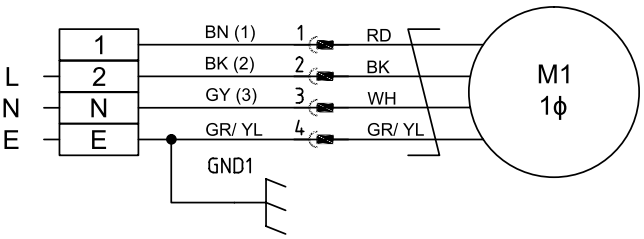

271-113-405

DSR 19 & 22 (FAN SUPPLY)

Note:

1. Supply 230V - 1Ph - 50Hz.
2. Applies To DSR Range Only:
   - DSR 19
   - DSR 22
3. High Speed: Connect Supply To Terminal Block Terminals 2 And N.
4. Low Speed: Link Terminal Block Terminals 1 & 2.
5. Terminal Box: 210-604-W

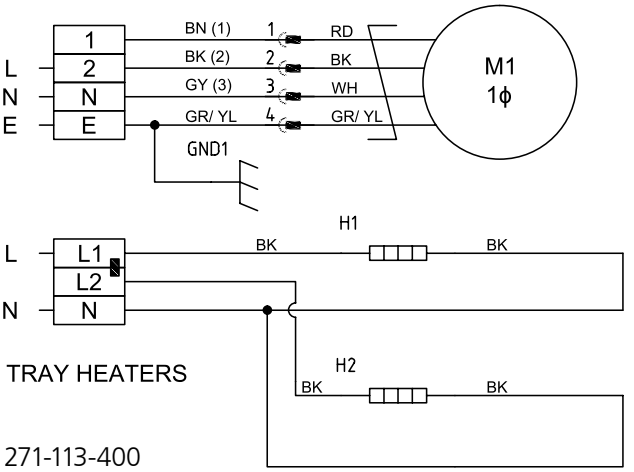

271-113-400

DSR 19 & 22 (FAN & DEFROST)

Note:

1. Supply 230V - 1Ph - 50Hz.
2. Applies To DSR Range Only:
   - DSR 19
   - DSR 22
3. High Speed: Connect Supply To Terminal Block Terminals 2 And N.
4. Low Speed: Link Terminal Block Terminals 1 & 2.
5. Heater Option: Remove Link Before Connecting 2nd Phase Supply.
6. Terminal Box: 210-608-W

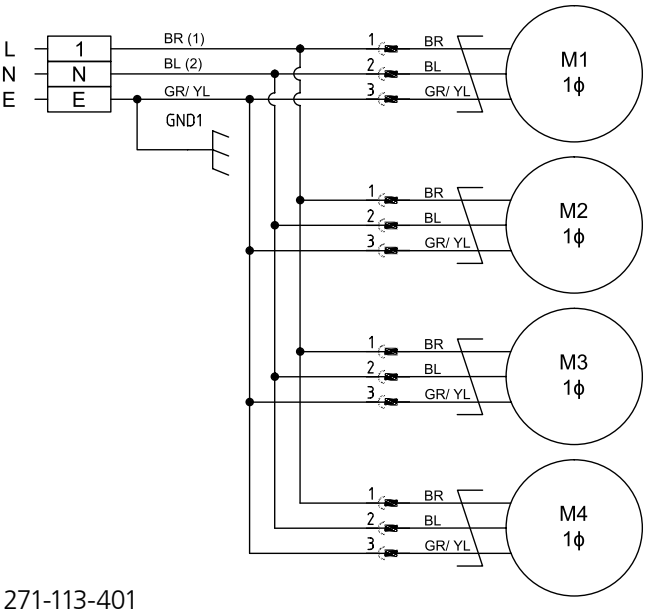

271-113-401

DSR 36 to 83 (FAN SUPPLY)

Note:

1. Supply 230V - 1Ph - 50Hz.
2. Applies To DSR Range Only:
   - DSR 100
   - DSR 16
3. For heater arrangement, ref. Drg. 271-113-404.
4. Terminal Box: 210-607-W.

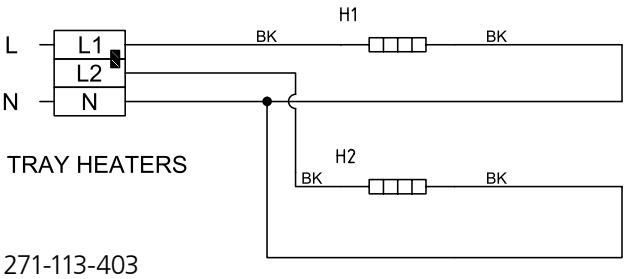

271-113-403

DSR 36 to 83 (DEFROST HEATERS)

Note:

1. Supply 230V - 1Ph - 50Hz.
2. Applies To DSR Range Only:
   - DSR36 To 83
3. Heater Option: Remove Link Before Connecting 2nd Phase Supply.
4. For Fan Arrangement, Ref. Drg. 271-113-401.
5. Terminal Box: 210-609-W.

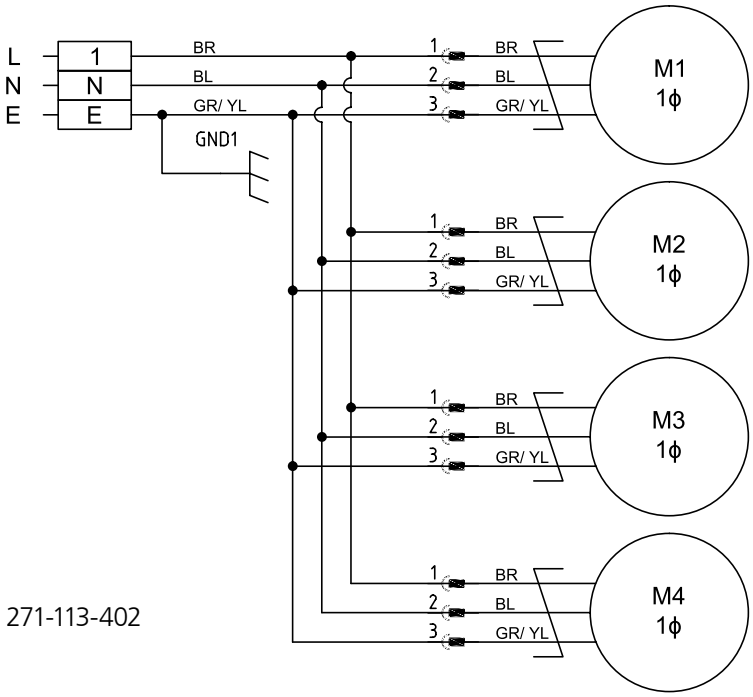

271-113-402

DSR 100 & 116 (FAN SUPPLY)

Note:

1. Supply 230V - 1Ph - 50Hz.
2. Applies To DSR Range Only:
   - DSR100
   - DSR 116
3. For Heater Arrangement, Ref. DRG.271-113-404.
4. Terminal Box: 210-607-W.

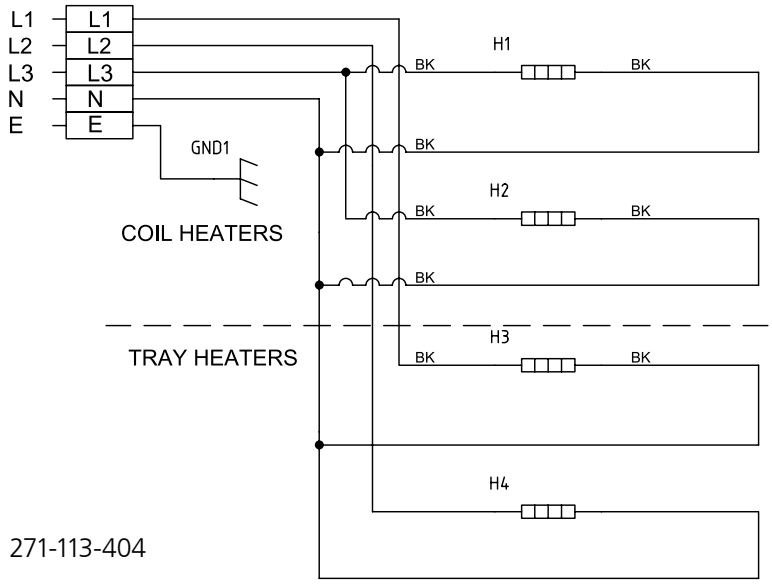

271-113-404

DSR 100 & 116 (DEFROST HEATERS)

Note:

1. Defrost Heater Supply 400V - 3Ph - 50Hz.
2. Applies To DSR Range Only.
   - DSR 100
   - DSR 116
3. For Fan Arrangement - Ref. Drg.271-113-402.
4. Terminal Box: 210-610-W.

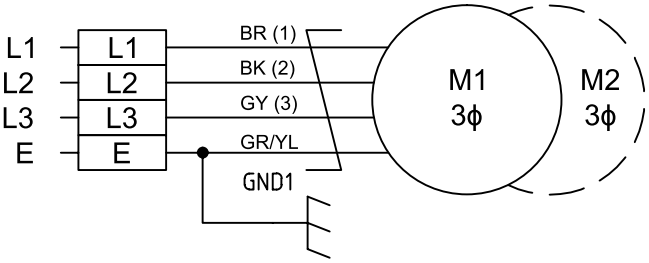

271-110-102

SM 16 to 30 (1 & 2 FAN SUPPLY)

Note:

1. Fan supply 400v - 3ph - 50hz.
2. Applies to SM range 1&2 fan only.
3. Fan junction box.
4. For heater arrangement:
   - REF. DRG. 271-112-215 or/
   - REF. DRG. 271-112-215.LV (As Applicable).
5. Terminal box(s): 290-634-w(2F); 290-642-W(1F)

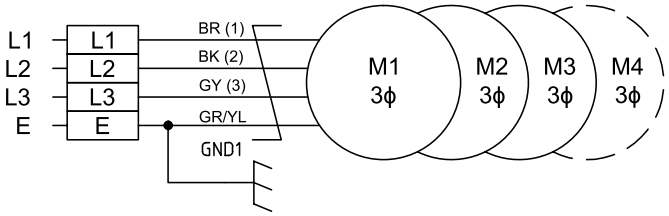

271-110-101

SM 16 to 30 (3 & 4 FAN SUPPLY)

Note:

1. Fan supply 400v - 3ph - 50hz.
2. Applies to SM range 3&4 fan only.
3. Common fan junction box.
4. For heater arrangement:
   - REF. DRG. 271-112-215 or/
   - REF. DRG. 271-112-215.LV (As applicable).
5. Terminal box(s): 290-635-w(3F); 290-636-W(4F)

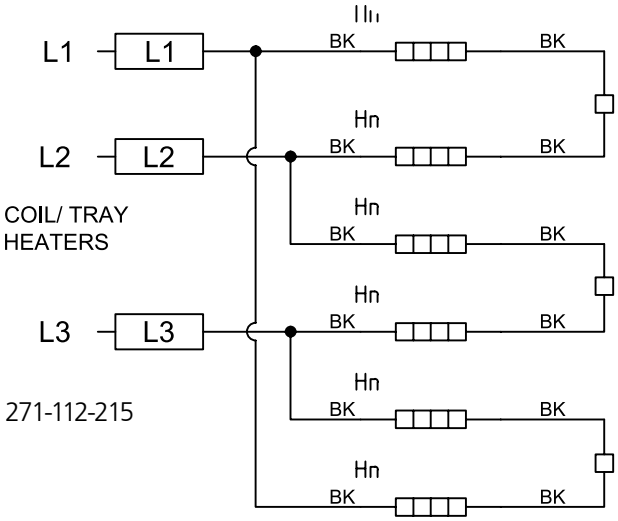

271-112-215

SM 16 to 30 (DEFROST SUPPLY)

Note:

1. Defrost heater supply 400v - 3ph -50Hz.
2. Applies to SM range only:
3. For clarity multiple defrost Heaters not shown.
4. For fan arrangement ref. Drg 271-110-101.
5. Terminal box(s): 23-000-623 (L1&L2); 23-000-624(L3).
6. For peripheral heater arrangement ref. Drg. 271-112-214.

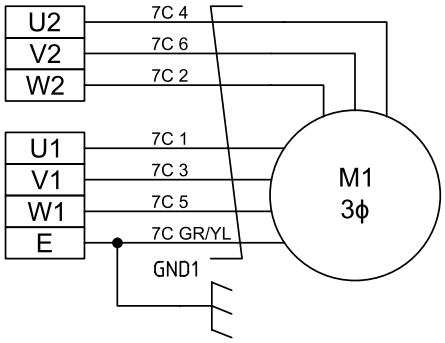

271-112-210

FM 20 to 36 (2 SPEED FAN)

Note:

1. Fan supply 400v - 3ph - 50hz.
2. Applies to FM range only.
3. 2 Speed option only.
4. For heater arrangement:
   - Ref. Drg. 271-112-211 or/
   - Ref. Drg. 271-112-215.LV (As applicable).
5. Terminal box: 218-143-202.

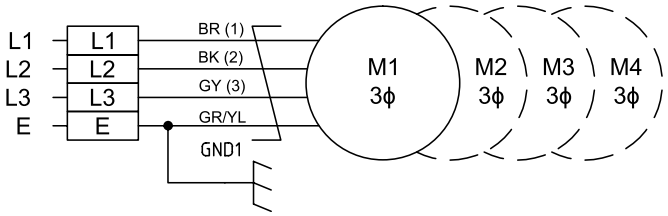

271-112-211

FM 20 to 36 (4 FAN SUPPLY)

Note:

1. Fan supply 400v - 3ph - 50hz.
2. Applies to FM range only.
3. Common fan junction box.
4. For heater arrangement:
   - REF. DRG. 271-112-215 or/
   - REF. DRG. 271-112-215.LV (As applicable).
5. Terminal box: 218-143-202.

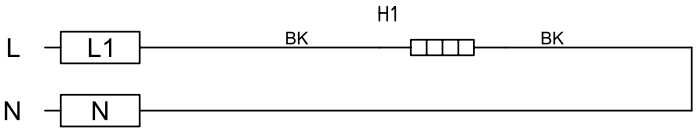

271-112-214

FM/SM Peripheral heater

Note:

1. Supply 230v - 1ph - 50hz.
2. Applies to FM/SM range only.
3. For fan arrangement:
   - REF. DRG. 271-112-213 or
   - REF. DRG. 271-112-215-LV or
   - REF. DRG. 271-112-215
4. Terminal Box(S): 218-143-101.
5. Option Dual Phase Peripheral Heater Connected To L1 And L2.

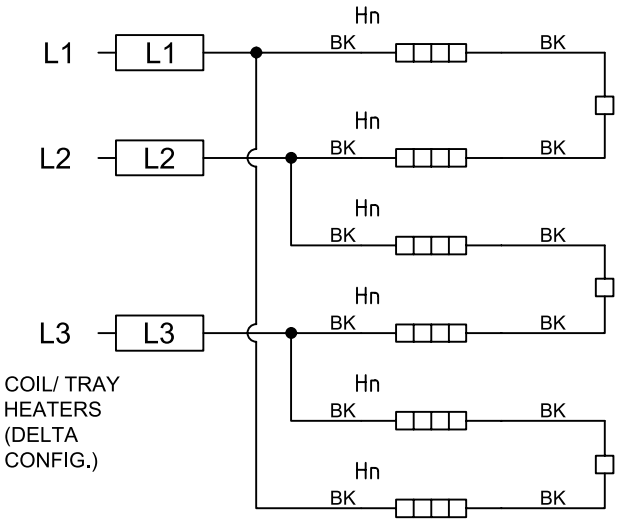

271-112-212

FM 20 to 36 (DEFROST DELTA)

Note:

1. Defrost heater supply 400v - 3ph-50Hz.
2. Applies to FM range only
3. For clarity multiple defrost heaters not shown.
4. For fan arrangement ref. Drg 271-112-210 And 271-112-211.
5. Terminal box(s): 21-000-623(L1&L2); 23-000-624(L3).
6. For peripheral heater Arrangement ref. Drg. 271-112-214.

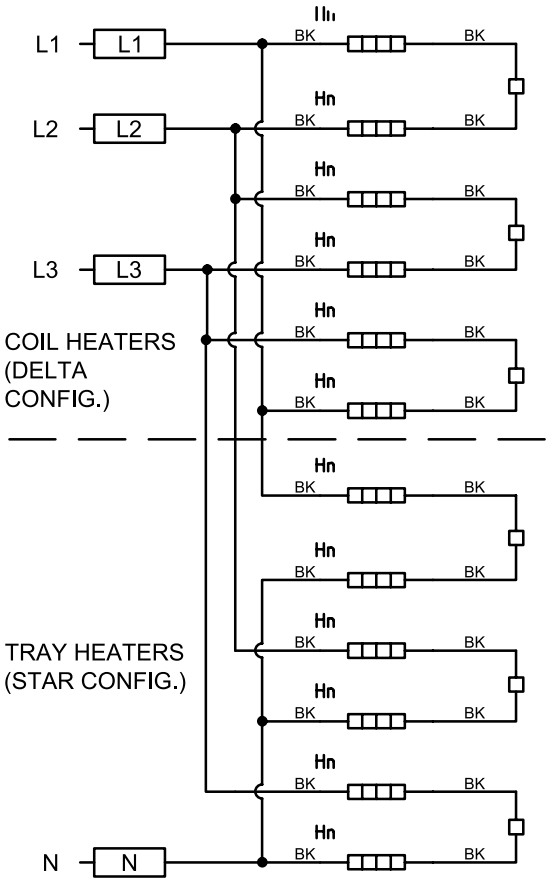

271-112-213

FM 20 to 36 (DEFROST DELTA/STAR)

Note:

1. Defrost heater supply 400v - 3ph -50Hz.
2. Applies to FM range only
3. For clarity multiple defrost Heaters not shown.
4. For fan arrangement ref. Drg 271-112-210 And 271-112-211.
5. Terminal box(s): 21-000-623(L1&L2); 23-000-624(L3).
6. For peripheral heater Arrangement ref. Drg. 271-112-214.

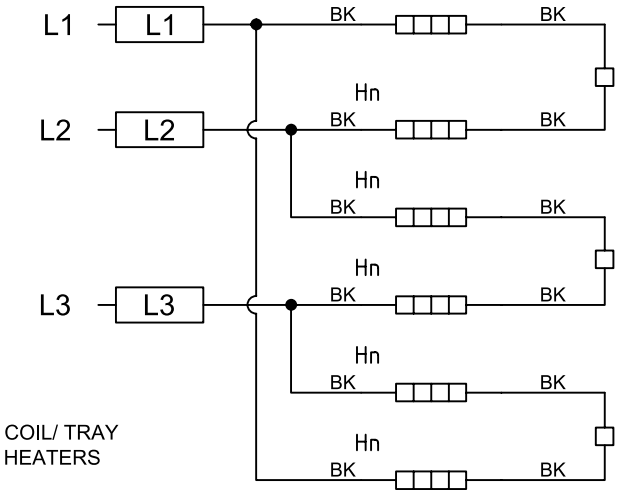

271-115-173-E

LSR 12n (DEFROST WIRING)

Note:

1. Defrost heater supply 400v - 3ph -50Hz.
2. Applies to LSR range only
3. For clarity multiple defrost Heaters not shown.
4. For fan arrangement ref. Drg 271-115-173-F.
5. Terminal box: 290-668-w.

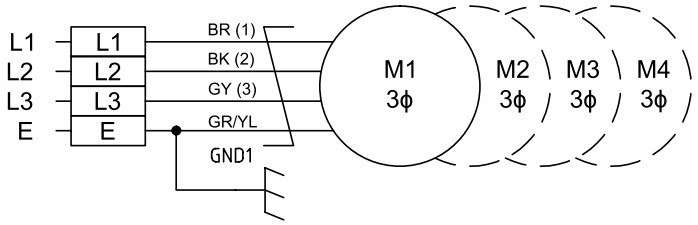

271-115-173-F

LSR 12n (FAN SUPPLY)

Note:

1. Fan supply 400v - 3ph - 50hz.
2. Applies to LSR range only.
3. Common fan junction box.
4. For heater arrangement:
   - Ref. Drg. 271-115-173-E
5. Terminal box: 290-636-w.

15. Defrost

Air cooling evaporators whose surface temperature is lower than the dew point of the air they are cooling will accumulate moisture from the air. When the surface temperature is below freezing, this moisture will be deposited in the form of frost and eventually, if left, will restrict heat transfer and air flow.

Various methods are used for the removal of frost. When the air inlet temperature is at 3°C or higher it is possible to use natural defrost by just switching off the refrigeration flow for a period. At lower temperatures heat needs to be added and the fans switched off to prevent the heat being blown into the store. The heat can be from electrical elements passing through or adjacent to the fin, hot/warm refrigerant gas passing through the tubes or, less commonly, water cascaded over the fins or a warm glycol solution in a secondary system of tubes.

Defrost options

Hot-gas defrost can be the quickest and most efficient common method of defrost. The fact that heat is applied to all the same surfaces that provided the cooling means that frost is melted quickly and evenly. The low temperature of the heat, compared to electric defrost, results in less heat, in the form of steaming condensate, escaping from the cooler into the coldstore.

HG(E)A, HG(E)B – Reverse Cycle

Generally used on systems with one or two evaporators. During defrost the condenser is used as an evaporator and the refrigeration system acts as a heat pump. During defrost the flow is in the reverse direction as it is usually most convenient to redirect flow close to the compressor. As the evaporator acts as a condenser in this regime the hot gas is at high pressure/high temperature giving a superior performance in comparison to a hot gas system.

HG(E)C, HG(E)D

Where there are two or more evaporators on a refrigeration system it is possible to defrost one using the hot-gas generated in the operating of the other. This arrangement allows defrost flow to be in the same direction as cooling flow. Although this arrangement can operate on a two evaporator system the quantity of low pressure, super heated gas is minimal, therefore it is recommended that this arrangement is used on systems with three or more evaporators, with one evaporator on defrost whilst the other evaporators are operational, generating the defrost heat.

Defrost Header - HG(E)B, HG(E)C

Without a defrost header the distribution system causes a restriction reducing the flow rate of hot-gas. This reduces the rate of defrost and can result in condensed refrigerant logging in the coil and preventing even defrosting. This problem is more likely the less superheat the hot-gas has.

Drain Pan Defrosting – HGE

Hot gas can be used for drain pan defrost but the lower heating temperature makes it difficult for heat to reach the extremes of the drain-pan. Also, the drain-pan is more exposed to the room temperature and will quickly drop to room temperature when the defrost is terminated, with the possibility of condensate still running of the coil to freeze in the pan. Using electric defrost in the pan overcomes these disadvantages, particularly as it can be controlled to operate for a short time before and after the main defrost.

The best configuration of hot gas coil and tray defrost is to ensure that the hot gas enters the tray matrix first then enters the coil, this is arranged via the valve station supplied and fitted by the refrigeration contractor.

Initial Defrost Termination Settings

Time/Time defrost system

KMe, KEC, TEC, DSR , LSR, FM, SM: 30 minutes

Time/Temperature termination system

TEC, KEC, KMe - Electric defrost: minimum setting 4.5°C
DSR, LSR, SM, FM - Electric defrost: minimum setting 11°C

Time/Pressure termination system

All cooler units Reverse cycle/hot gas defrost
Pressure equivalent to 25°C SST of the system refrigerant

Defrost Termination

If a defrost termination thermostat is to be fitted then the normal starting position of the defrost probe is 1/3rd of the way along the coil face (air on) and about 2/3rds up away from any heater elements. Once the system is in operation it may be necessary to relocate the probe to the area of the coil where ice remains the longest during defrost (possibly air off face).

16. Coil heaters

Coil block heaters are either 'U' bent or straight and they have to be disconnected from the terminal box at the electrical connection end and sometimes from the auxiliary terminal box at the refrigeration connection end of the cooler. These heaters are withdrawn and replaced from the refrigeration connection end of the cooler taking care to retain the 'anti-creep'clips.

These clips may be re-used but will possibly need retensioning. To avoid damage to either the coil fins or the heater cable, the heater cable should be inserted into a similar length of 1/4" OD copper tube and fed carefully through the fins with a twisting motion. With care the heater element sheaths can be curved through 90° (minimum radius 600mm) for removal and refitting purposes. Before attempting to refit a heater it is essential to ensure that the coil heater hole has not become obstructed with ice and wherever possible the coil block should be above freezing point.

Drain Pan Heaters

Replacement is achieved by disconnecting the elements from the terminal box(es) after removing the end cover and drain pan, and unclipping/unscrewing the heater retaining clips.

17. Initial Starting

Before running the unit for the first time, check that all guards, motor mountings and electrical covers are secure, all unnecessary terminal block links are removed and fans rotate freely. Remove any lifting channels.

Check that that the unit is secured in the correct manner specified in section 6. Only fix the unit using the mounting slots provided.

Check that the fan rotation of 3 phase units is correct. Reversing any two phases of the motor supply will change the rotation (AC fansets only).

18. Maintenance



WARNING!

The Unit must be Electrically Isolated before certain Maintenance Work is undertaken.

Appropriate PPE should be worn when performing maintenance procedures, adhering to specific site requirements as appropriate. Any repairs to the condensers or dry cooler should be undertaken by suitably qualified personnel and relevant national regulations should be adhered to, specifically with regards to handling of working fluids and brazing. If any advice or guidance is required with regards to failure or repairs of GEA supplied product please contact your local representative. Regular attention should be paid to the system operating requirements to ensure that the operating parameters are within the products/system specifications.

Every month check:

- Fan motors must be operated for at least 2 hours every month to prevent possible fanset failure
- Coil condition, i.e clogging

Every 12 months check:

- Security of fixings especially fan motor mountings.
- Refrigerant fluid pipework for damage and leaks.
- Motor(s) rotate freely.
- Electrical connections for security of attachment. Check all external surfaces annually for any corrosion or peeling. Clean any affected area thoroughly with a wire brush, apply a coat of zinc primer and retouch with a suitable finishing paint.

When necessary:

Clean the fins, guards and general casework. Care must be taken when cleaning the fins to prevent damage. A soft brush and mild detergent solution is recommended.

The following routine annual maintenance is recommended:

- Check security of fixings especially fan motor mountings.
- Check refrigerant pipeline for damage and leaks.
- Check all motors rotate freely.
- Check electrical connections for security of attachment.
- Check heat exchanger coil for build-up of debris or soiling.
- Check all external surfaces annually for any corrosion or peeling.- cleaning any affected area thouroughly with a wire brush before applying a zinc primer to the area and complete with an appropriate finishing paint.
- Clean any affected area thoroughly with a wire brush, apply a coat of zinc primer and retouch with a suitable finishing paint.
- On belt drive units, every month check belt tension and wear.
- On completion of work ensure all objects are removed from the unit.
- Only original spare parts should be used if replacing failed components.

Component Replacement

- Pressure Transducer/ Pressure switches
- When removing the pressure devices safety goggles and gloves must be worn.

When starting the necessary maintenance routine please be aware of the following hazards



Explosion risk

Keep the risk area free from any ignition sources



Electrical voltage

The power supply is isolated before any installation or maintenance work is carried out.

19. Coil Cleaning

It is essential that the heat exchanger coil is kept clean to maintain the designed heat transfer rate. General debris such as leaves, paper, dust and pollen can be removed using a brush, with compressed air blowing against direction of airflow (Max pressure 3bar) or an industrial vacuum cleaner.

The fin should be brushed in the longitudinal direction of the fins with a soft brush.

Heavier greasy soiling must be removed using a high- pressure water/steam jet washer (Max pressure 3bar) against direction of airflow, at a distance of 300 to 400mm using a neutral cleaning agent if required.

The jet of the cleaner should be held vertical to the fin bank to avoid fin damage.

Any cleaning fluids should be suitable for use on both tube and fin materials, incorrect use of fluids could be corrosive towards heat exchanger materials.

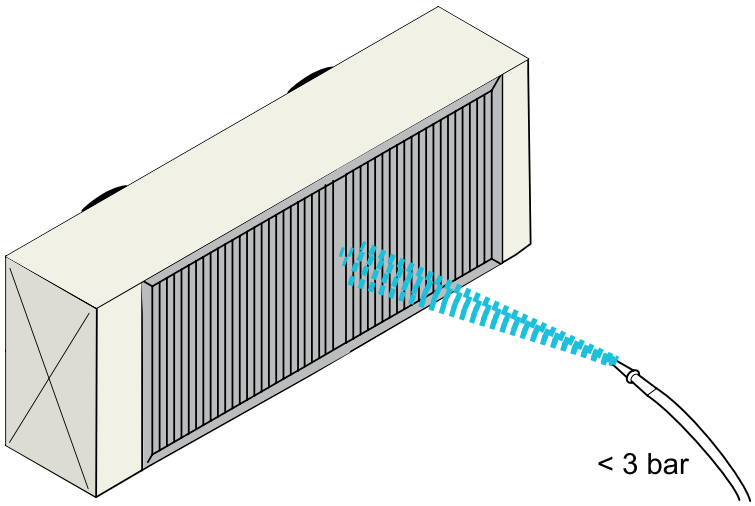

20. Standards

- 97/23/EC Pressure Equipment Directive
- 2006/42/EC Machines Directive
- En 378; Parts 1 to 4; "Refrigeration systems and heat pumps, technical safety and environmental requirements"
- 2006/95/EC Low Voltage Directive
- EN60204-1: 1999 Safety of machinery-Electrical equipment of machines
- BS EN 61032: 1998 Protection of persons and equipment by enclosures, Probes for verification (propeller fan units)
- BS EN13857:2008 Safety of machinery- Safety distances to prevent hazard zones being reached by the upper and lower limbs.

21. Invalidation of Guarantee

Searle accepts no liability according to Searle's terms and conditions of sale, or for loss or damage arising as a result of:

1. Failure to install set up or put to work any part of the equipment in the manner specified in the Installation and Maintenance Instructions

2. Failure to maintain the equipment in the manner specified in the Installation and Maintenance Instructions

3. Replacement parts, additional parts or accessories manufactured by persons other than Searle having been incorporated into, or attached to the equipment.

4. The equipment having been adapted for use, operated or used in such a way as does conform to Searle's recommendation.

Options - Part numbers of options supplied separately

Defrost kits

Part type/ Description	TEC1 TEC2	TEC2	TEC3.5/4 TEC4	TEC5	TEC6	TEC7	TEC8
Ceiling Mounting	T2 LTKIT	T3 LTKIT	T3.5/4	T5/6LTKIT		T7/8LTKIT	
Wall Mounting	WT1/2LTKIT	WT3 LTKIT	WT3.5/4	WT5 LTKIT	WT6 LTKIT	WT7/8	
Wall mounting kits	WT1/2 PAN	WT3 PAN	WT3.5/4 PAN	WT5 PAN	WT6 PAN	WT7 PAN	WT8 PAN

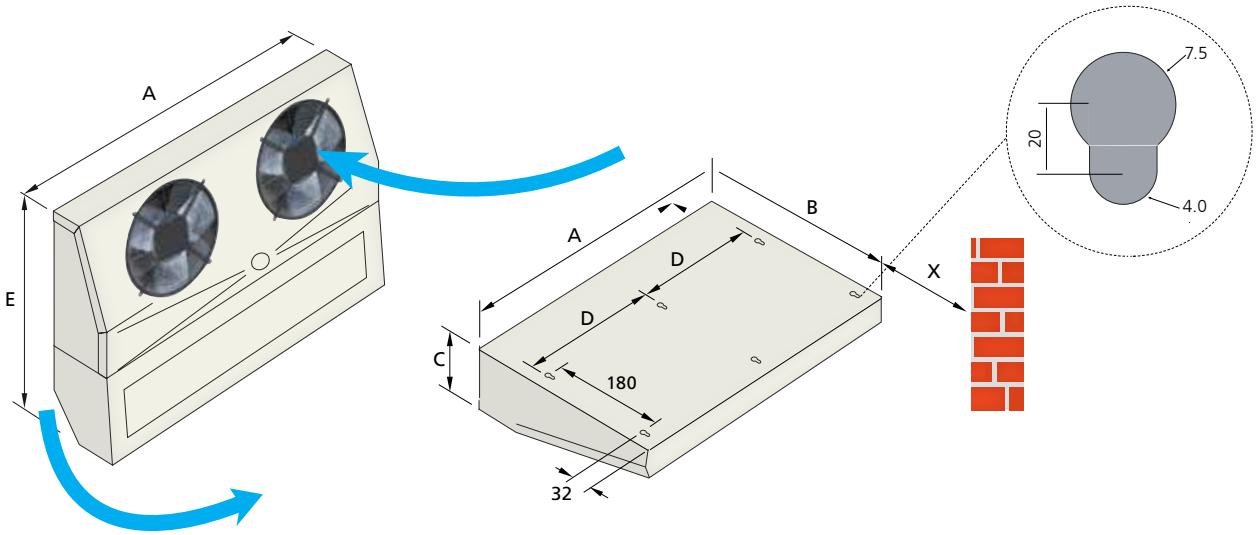

Diagram shows optional drain pan when unit is wall mounted

TEC Dimensions

Model	No of fans	mm						Connections		Approx dry weight (kg)
		A	B	C	D	E	X Min	Outlet Inches	Inlet Inches	
TEC1	1	525	375	180	453 (x4)	550	120	3/8	3/8	7.3
TEC2	1	525	375	180	453 (x4)	550	120	3/8	3/8	8.2
TEC3	1	690	375	180	618 (x4)	550	120	3/8	3/8	9.8
TEC3.5	1	865	375	180	793 (x4)	550	120	1/2	3/8	12.0
TEC4	2	865	375	180	793 (x4)	550	120	1/2	3/8	13.7
TEC5	2	1120	375	180	524 (x6)	550	120	1/2	3/8	16.4
TEC6	2	1120	375	230	524 (x6)	550	120	5/8	1/2	18.5
TEC7	3	1528	375	180	728 (x6)	550	120	7/8	1/2	24.0
TEC8	3	1528	375	230	728 (x6)	550	120	7/8	1/2	26.9

KEC 10 - 15

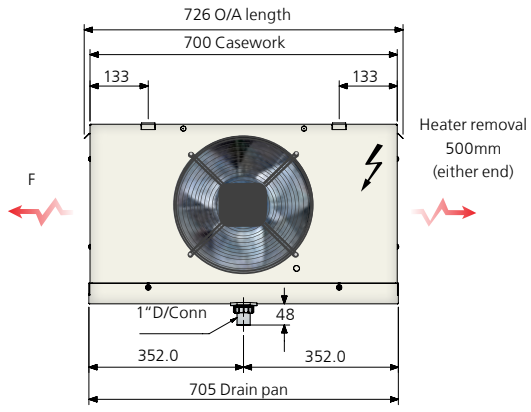

KEC 20 - 30

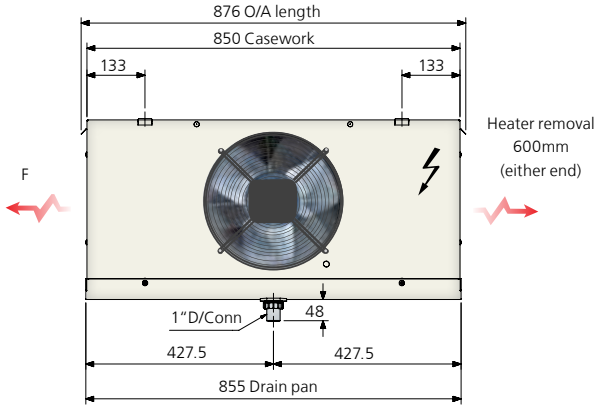

KEC35 - 45

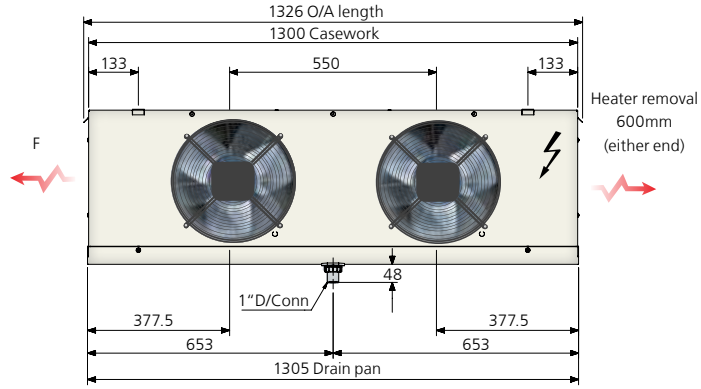

Hanging bracket for KEC Models

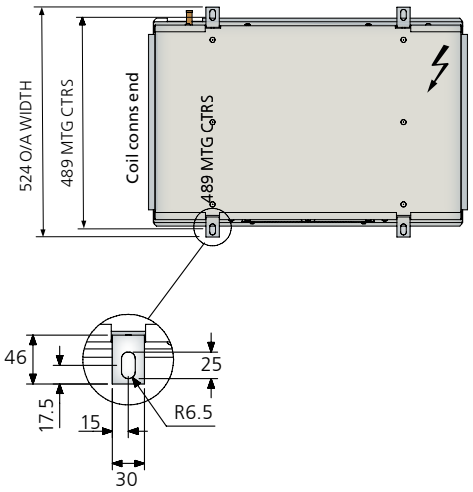

KEC55 - 70

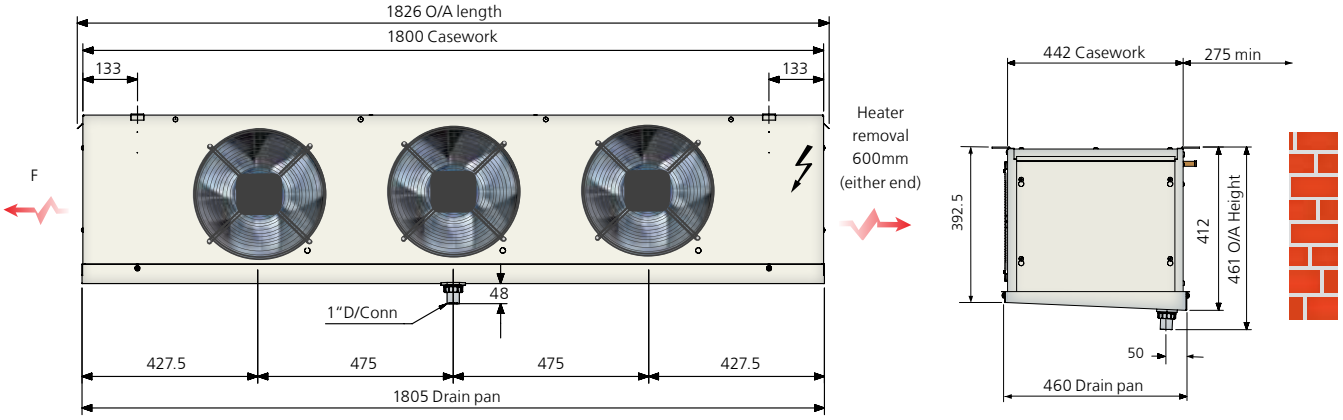

Note: Maintenance access require at both ends of unit All dimensions in mm, F' = Min heat Withdrawal

KMe50

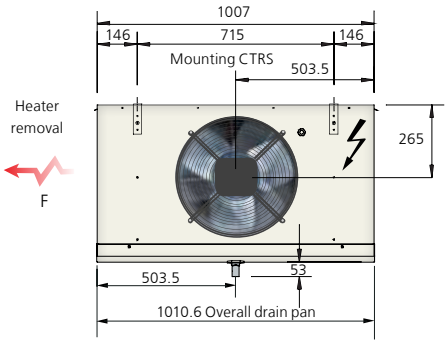

KMe 60

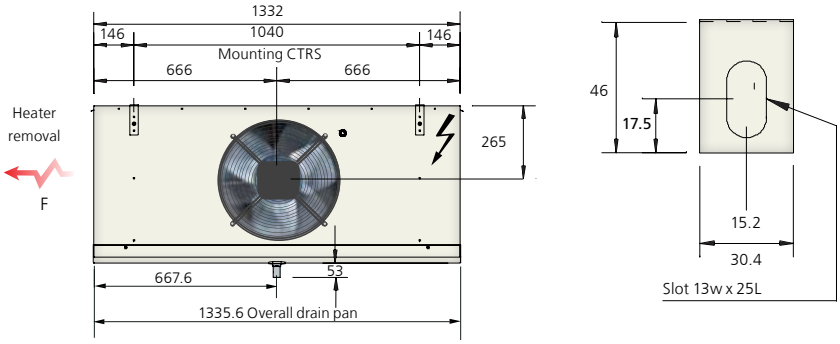

KMe80, KMe 95

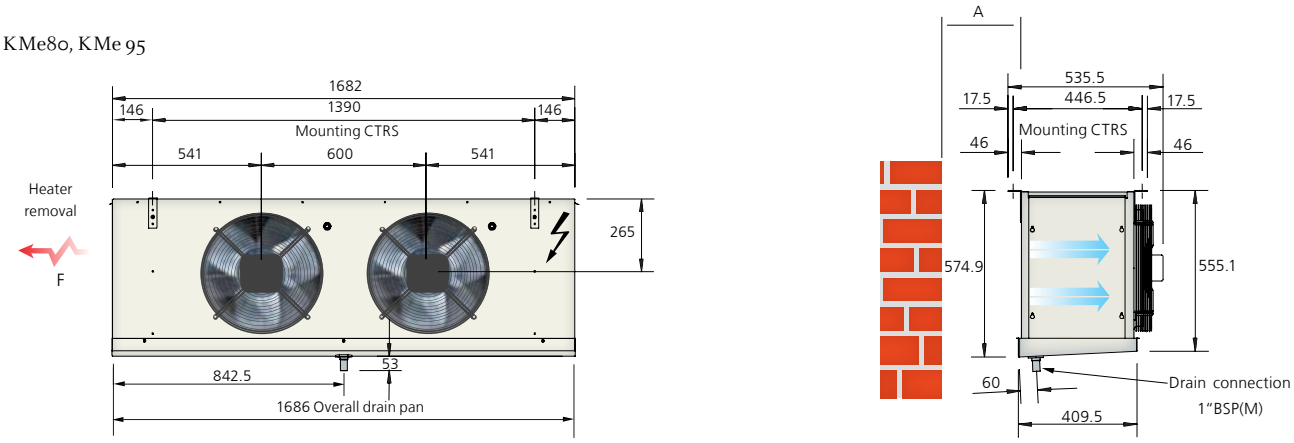

KMe 115, KMe 140

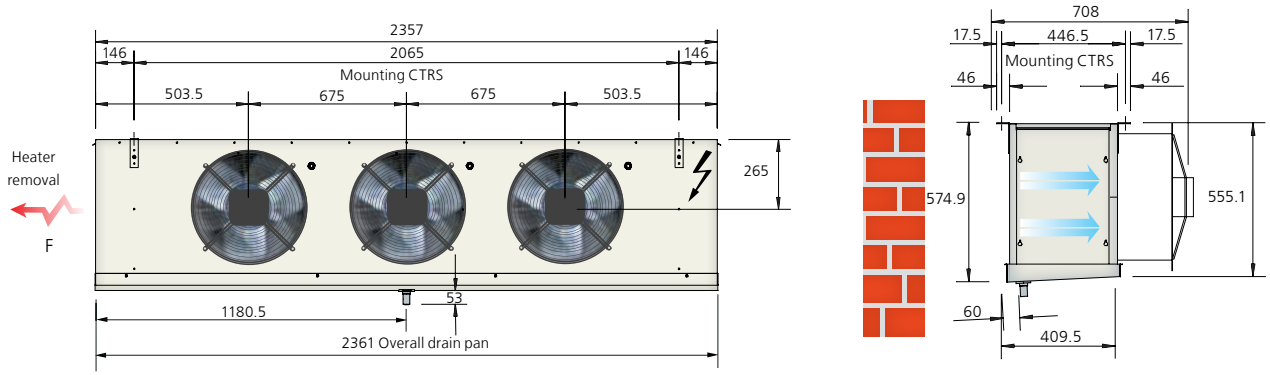

KMe 175

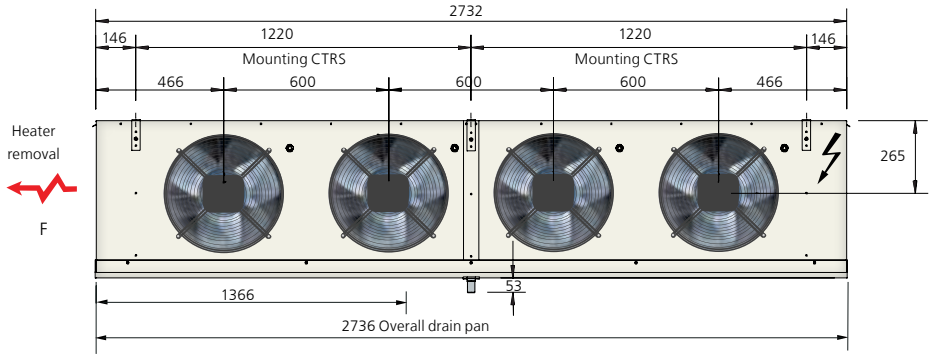

Models	A	F
KMe50	400	805
KMe60	400	1200
KMe80	400	1200
KMe95	400	1200
KMe115	400	1200
KMe140	400	1200
KMe175	400	1200

Note: All dimensions in mm,

F' = Min heat Withdrawal

LSR 121

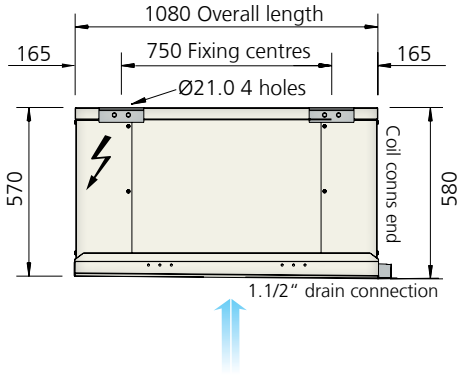

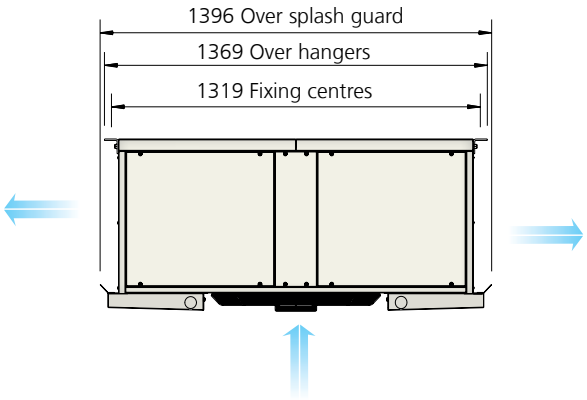

LSR 122

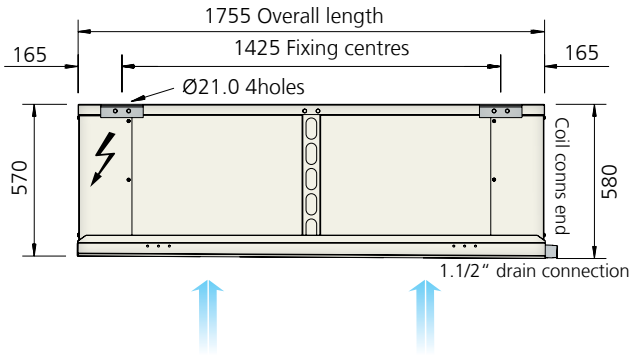

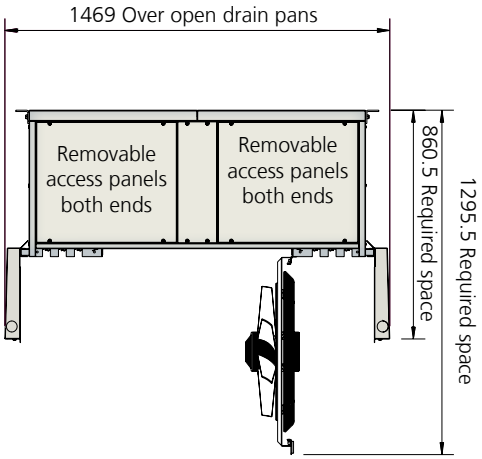

LSR 123

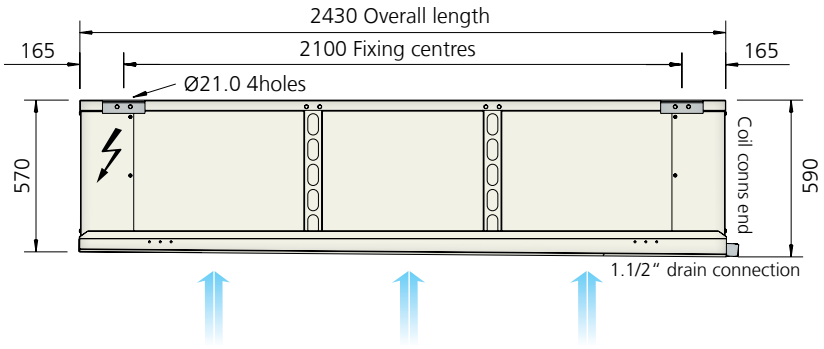

LSR 124

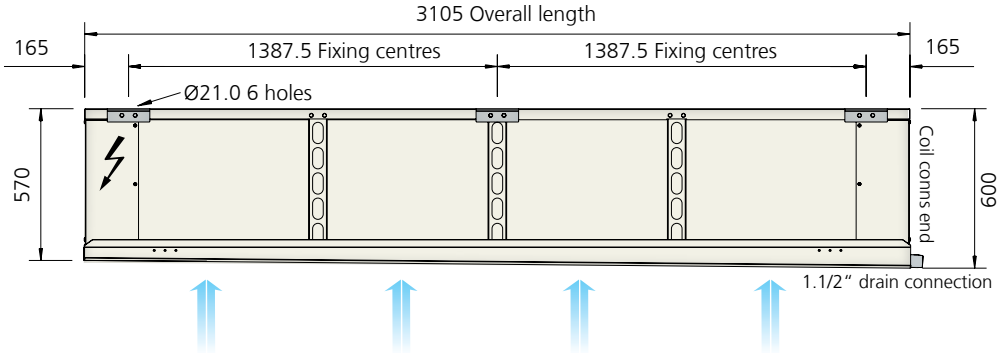

Model	Cu/Al weight (kg)	Cu/Cu weight (kg)
LSR121-44	117	151
LSR121-64	130	180
LSR122-44	180	232
LSR122-64	200	277
LSR123-44	237	314
LSR123-64	266	382
LSR124-44	301	405
LSR124-64	341	496
LSR121-46	114	141
LSR121-66	125	165
LSR122-46	175	216
LSR122-66	192	254
LSR123-46	230	291
LSR123-66	256	348
LSR124-46	292	374
LSR124-66	326	446

LSR drawings and dimensions

LSR 121

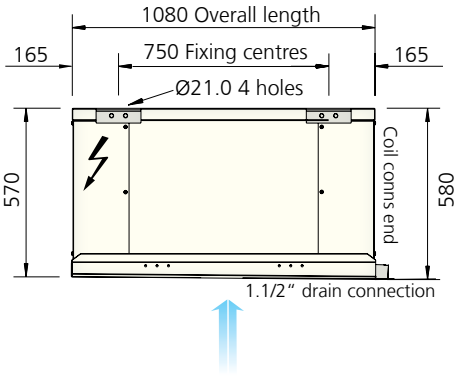

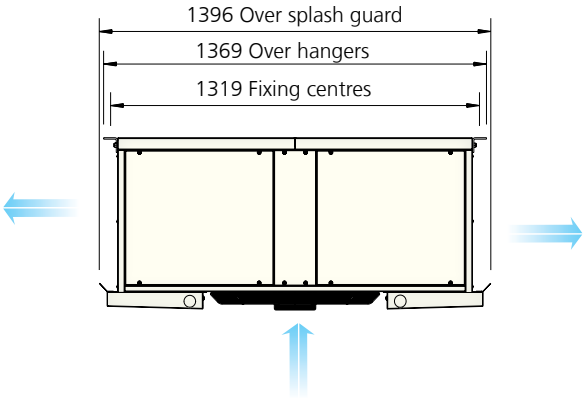

LSR 122

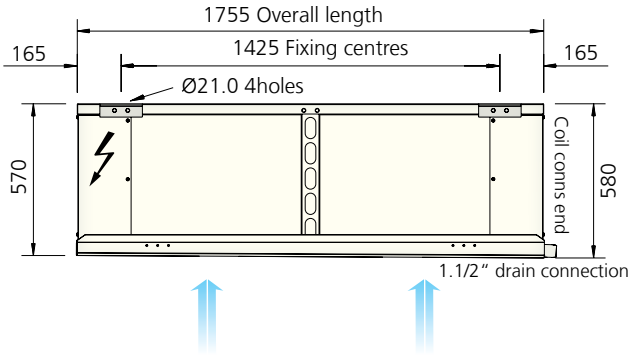

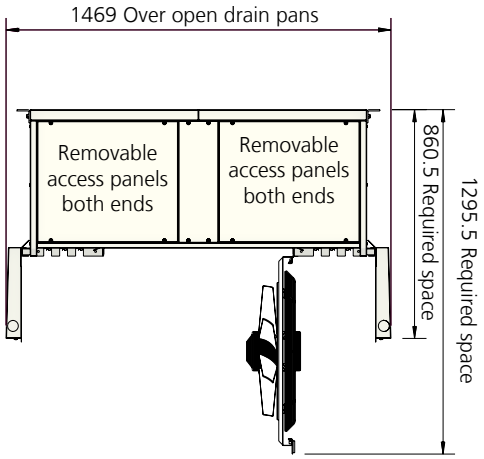

LSR 123

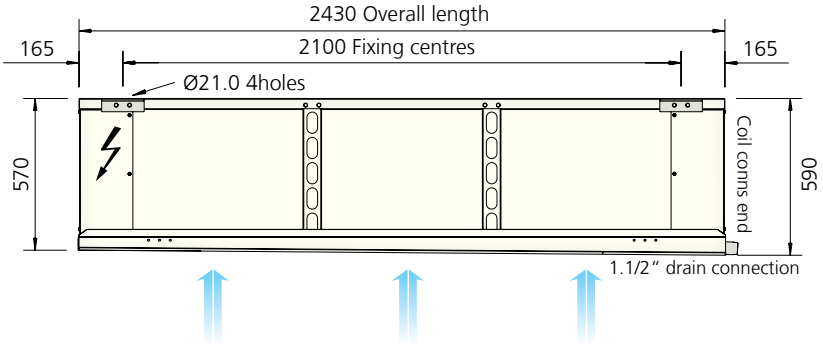

LSR 124

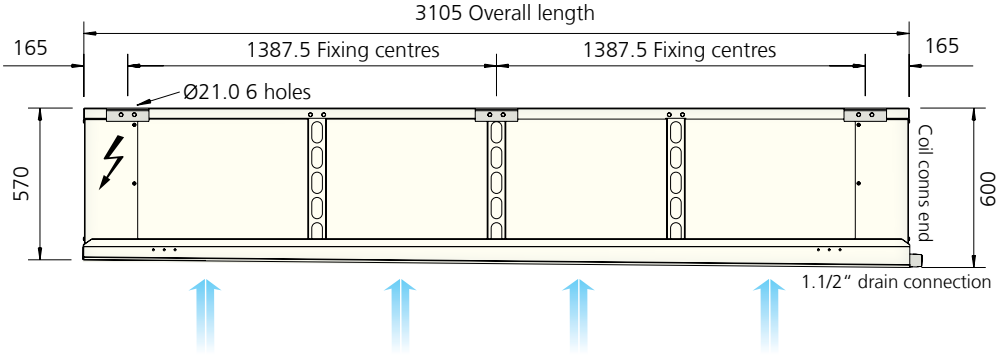

Model	Cu/Al weight (kg)	Cu/Cu weight (kg)
LSR121-44	117	151
LSR121-64	130	180
LSR122-44	180	232
LSR122-64	200	277
LSR123-44	237	314
LSR123-64	266	382
LSR124-44	301	405
LSR124-64	341	496
LSR121-46	114	141
LSR121-66	125	165
LSR122-46	175	216
LSR122-66	192	254
LSR123-46	230	291
LSR123-66	256	348
LSR124-46	292	374
LSR124-66	326	446

FM dimensions - Vertical

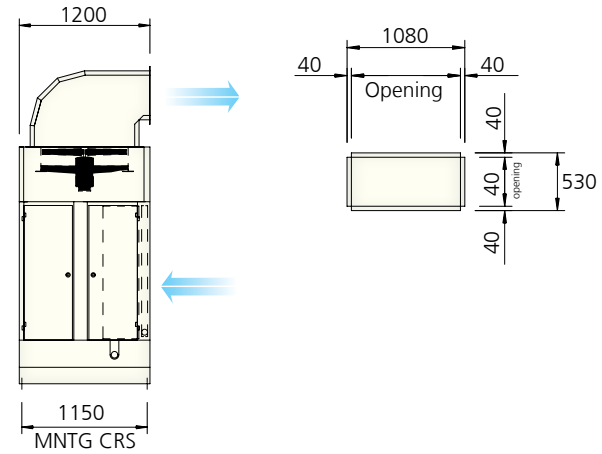

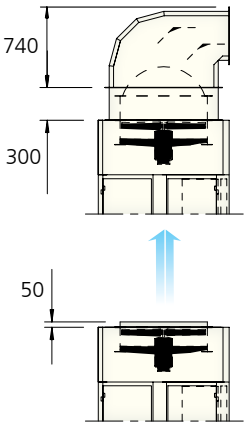

Air operated damper & crowl extension (defrost units)

Vertical discharge with spigot attachment option

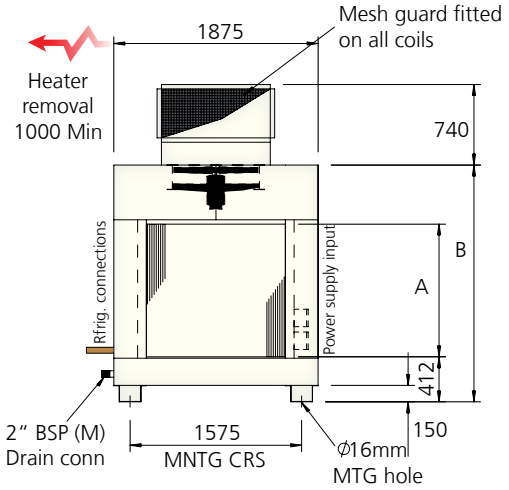

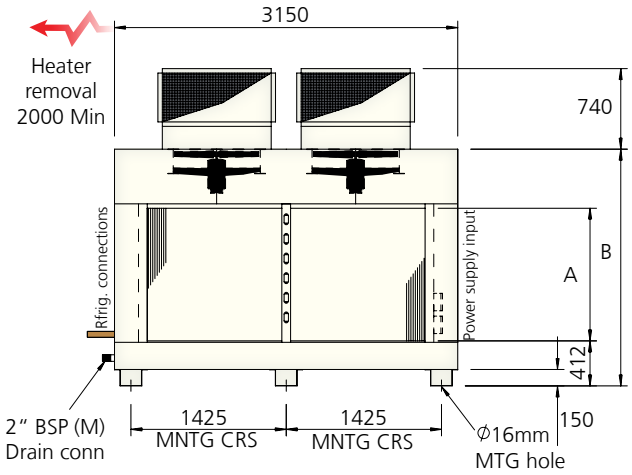

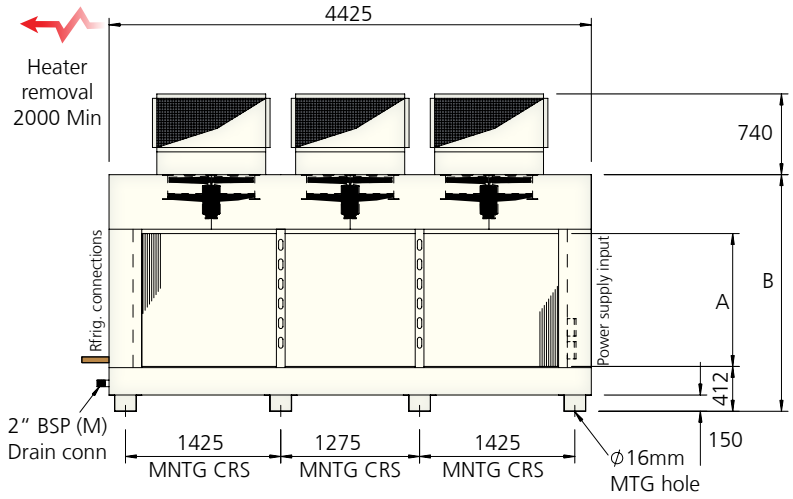

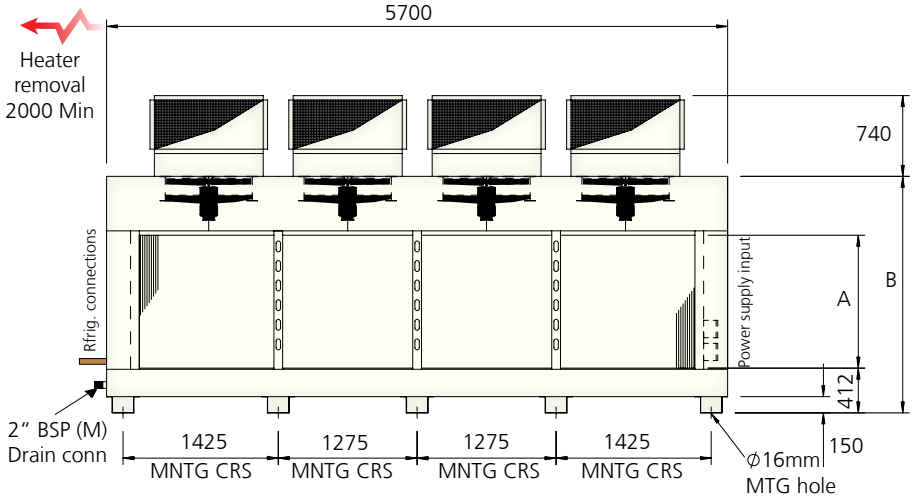

Model	Dim A	Dim B
FM20	1016	1969
FM24	1219	2173
FM30	1524	2477
FM36	1829	2782

FM dimensions - Horizontal

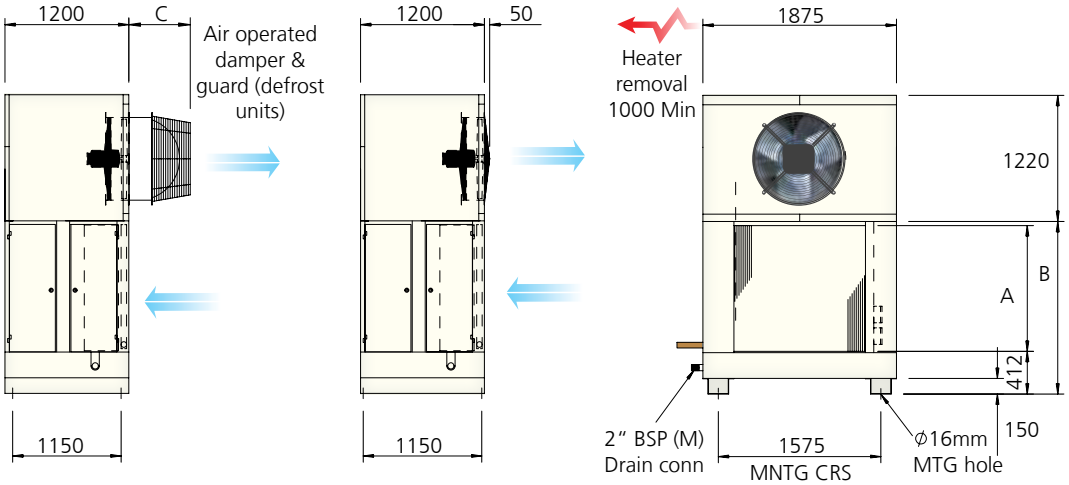

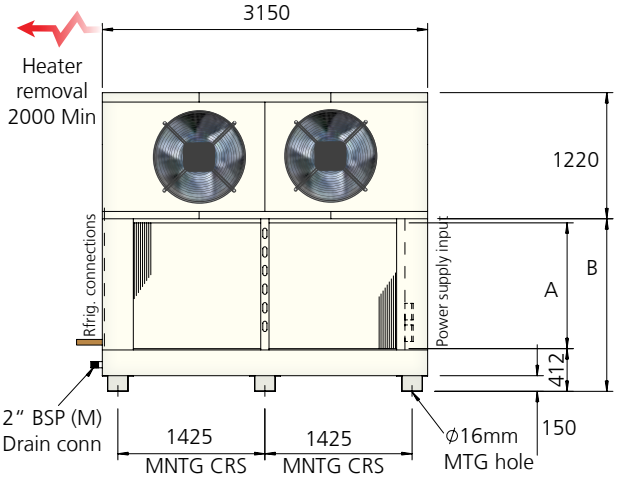

Model	Dim A	Dim B	Dim C
FM20	1016	1468	595
FM24	1219	1671	595
FM30	1524	1976	573
FM36	1829	2281	573

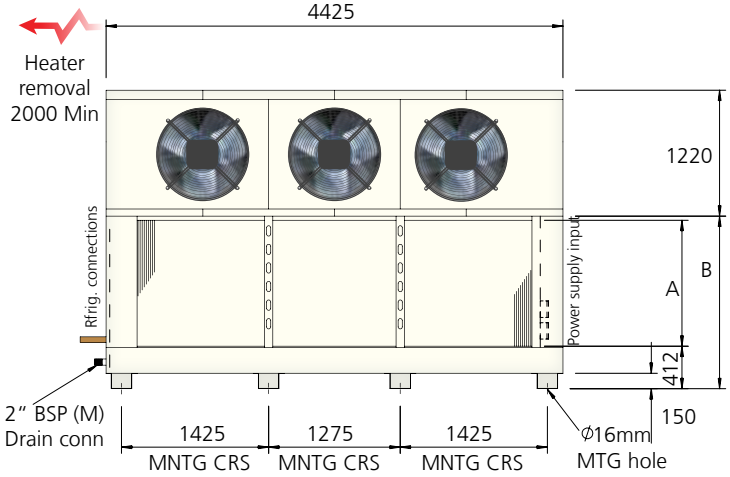

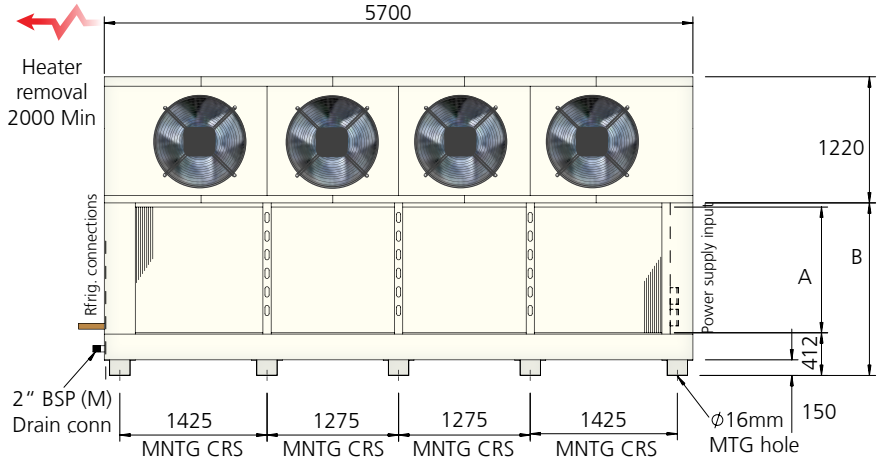

Model		201-4x	201-6x	201-8x	241-4x	241-6x	241-8x	301-4x	301-6x	301-8x	361-4x	361-6x	361-8x	202-4x	202-6x	202-8x	242-4x	242-6x	242-8x	302-4x	302-6x	302-8x	362-4x	362-6x	362-8x
(kg)	Cu/Al	502	565	627	550	625	700	633	726	820	704	816	929	788	911	1035	864	1013	1161	1001	1187	1372	1116	1338	1561
Weight	Cu/Cu	451	488	525	489	533	578	556	612	667	612	679	745	686	759	832	742	830	917	849	958	1067	933	1064	1195

Model		203-4x	203-6x	203-8x	243-4x	243-6x	243-8x	303-4x	303-6x	303-8x	363-4x	363-6x	361-8x	204-4x	204-6x	204-8x	244-4x	244-6x	244-8x	304-4x	304-6x	304-8x	364-4x	364-6x	364-8x
(kg)	Cu/Al	1073	1258	1443	1179	1401	1622	1370	1647	1924	1528	1861	2193	1359	1605	1851	1493	1789	2084	1739	2108	2477	1940	2383	2826
Weight	Cu/Cu	921	1029	1138	996	1126	1256	1141	1304	1467	1253	1449	1644	1156	1300	1444	1249	1422	1595	1433	1650	1866	1574	1833	2093

SM drawings and dimensions

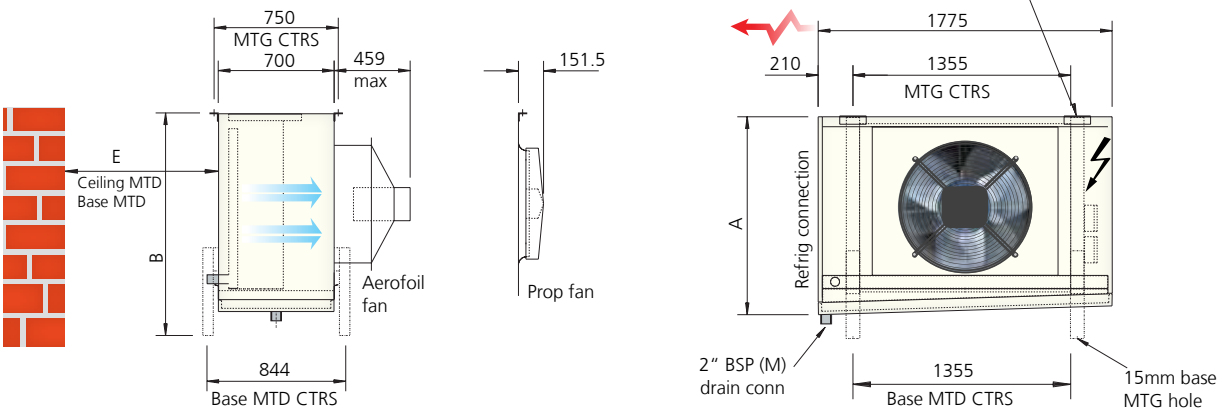

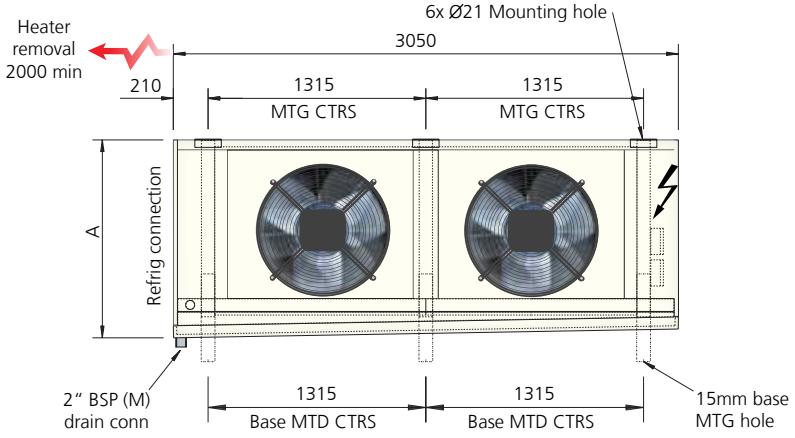

E Min	mm
SM 16	800
SM 20	1000
SM 24	1200
SM 30	1500

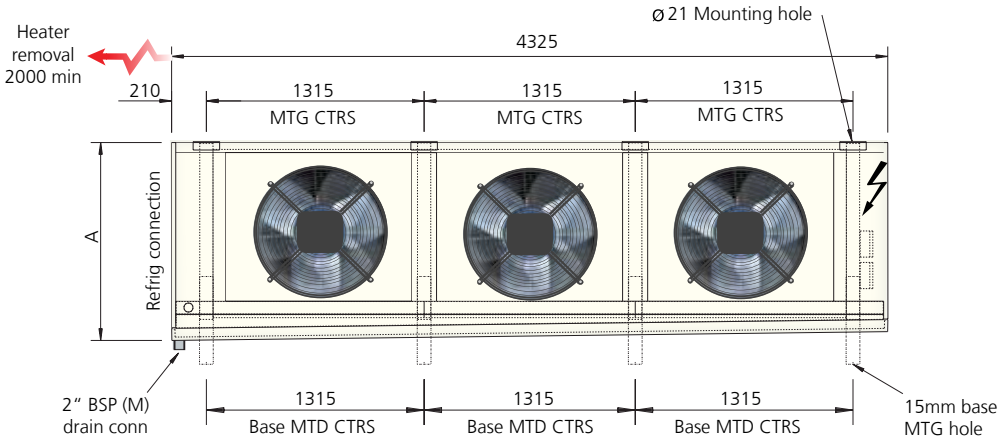

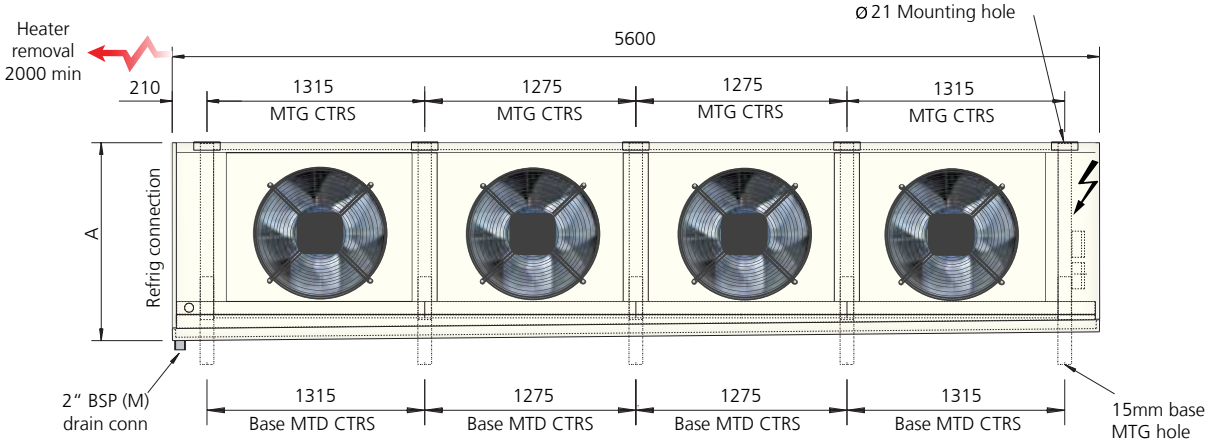

Model	Case height in rows	No. of fans	Fins spacing mm	Unit height ceiling mounted	Unit height base mounted	Unit weight Cu/Al
				(A) mm	(B) mm	kg
161 - 4x	16	1	4	970	1141	218
161 - 6x			6			248
161 - 8x			8			251
201 - 4x	20	1	4	1173	1344	258
201 - 6x			6			296
201 - 8x			8			299
162 - 4x	16	2	4	970	1141	378
162 - 6x			6			436
162 - 8x			8			442
202 - 4x	20	2	4	1173	1344	448
202 - 6x			6			520
202 - 8x			8			535
242 - 4x	24	2	4	1376	1547	504
242 - 6x			6			591
242 - 8x			8			607
302 - 4x	30	2	4	1681	1852	618
302 - 6x			6			727
302 - 8x			8			739
163 - 4x	16	3	4	992	1141	538
163 - 6x			6			625
163 - 8x			8			635
203 - 4x	20	3	4	1195	1344	642
203 - 6x			6			750
203 - 8x			8			773
243 - 4x	24	3	4	1398	1547	714
243 - 6x			6			844
243 - 8x			8			872
303 - 4x	30	3	4	1703	1852	883
303 - 6x			6			1045
303 - 8x			8			1064
244 - 4x	24	4	4	1398	1547	926
244 - 6x			6			1099
244 - 8x			8			1139
304 - 4x	30	4	4	1703	1852	1148
304 - 6x			6			1365
304 - 8x			8			1389

Note: Weights are maximums, based on 4mm fin spacing

We live our values.

Excellence • Passion • Integrity • Responsibility • GEA-versity

GEA Group is a global engineering company with multi-billion euro sales and operations in more than 50 countries. Founded in 1881, the company is one of the largest providers of innovative equipment and process technology. GEA Group is listed in the STOXX® Europe 600 Index.

GEA Heat Exchangers

GEA Searle

20 Davis Way, Newgate Lane, Fareham, PO14 1AR
Tel: +44 (0) 1329 823344, Fax +44 (0) 1329 821242
Searlesales@gea.com, www.searle.co.uk

GEA Searle Cooler Installation and maintenance Issue 1 March 2014 272-000-296