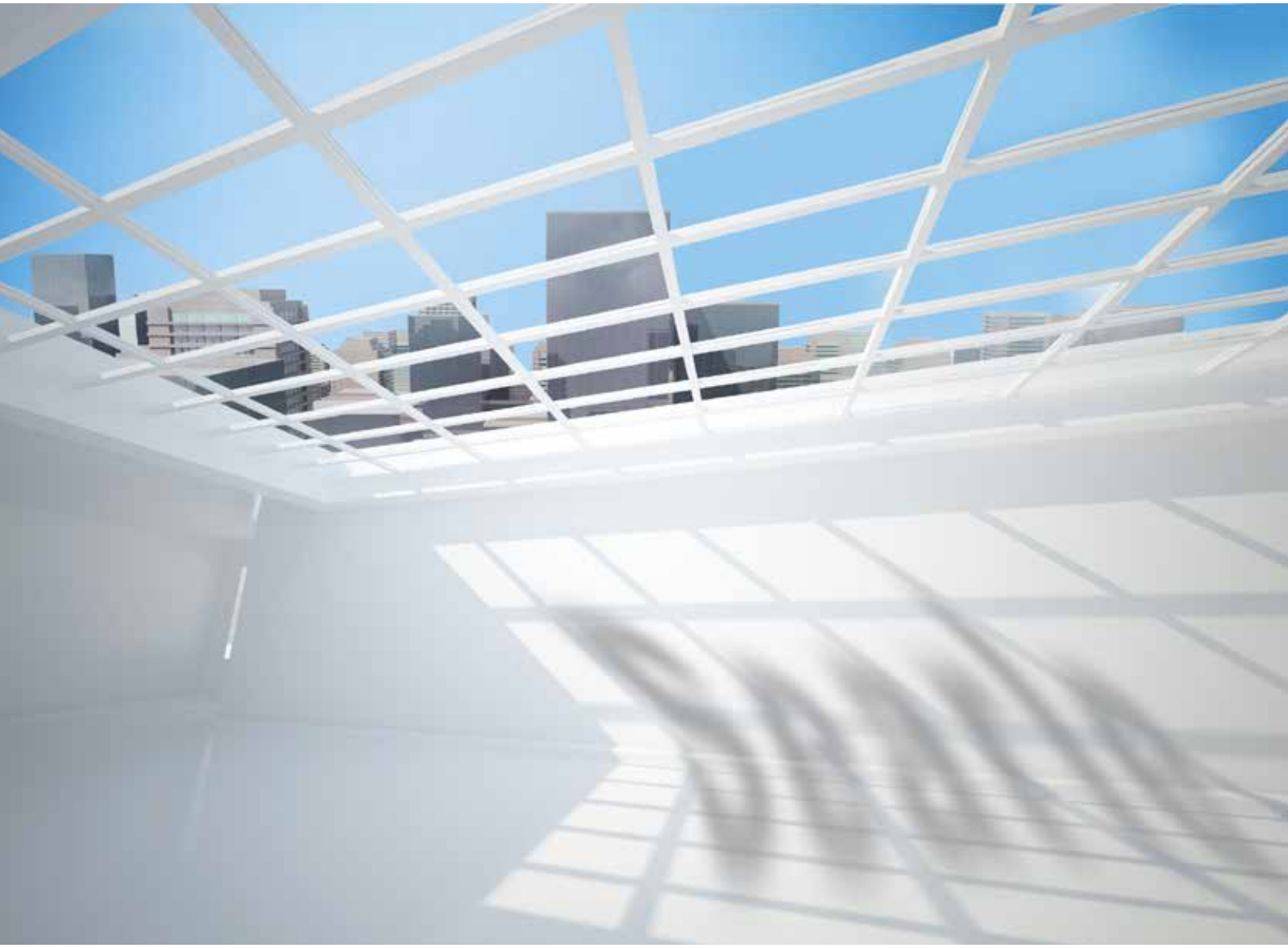

GEA Searle Commercial Dry Coolers

Top-level engineering solutions

engineering for a better world

GEA Heat Exchangers









GEA Searle Products and Services

Centre of excellence

Dry Air coolers - Our ranges have literally 1000s of models, created through a modular design and variety of fan sizes, offering a greater choice to match your requirements. Our Dry coolers can meet even the most stringent noise restrictions utilising the best fan technology in the market today. In addition, we offer EC technology across the standard range, which offers variable speed control and high efficiency. Due to rising energy costs efficiency is becoming a key industry issue and is increasingly important on end-user criteria. Our new units use the latest technology to ensure greater energy efficiency. GEA has extensive experience in the design of controls either using the GEA controller or 'industry standard' controllers such as Millennium 2 or RDM.

Research and Development - In order to guarantee the continued excellence of our products in terms of innovation, design and performance, GEA has invested in one of the most comprehensive Research & Development facilities in the European refrigeration industry. GEA also undertakes special projects on behalf of other manufacturers, customers and end-users. In our R&D testing facilities Searle and Küba are able to test for the following performance characteristics: duty (kW), air flow (m3/hr), motor performance and noise.

Eurovent Certification - This Europe-wide scheme provides a single, common, voluntary performance certification programme for heat exchangers. The scheme is managed by a separate, autonomous organisation - the Eurovent Certification Company - which carries out independent testing against agreed European/International standards. This ensures that the actual performance of certified products matches the claimed performance.

Engineering Facilities - The advanced Computer Aided Design system interfaces directly with production machinery allowing customer "special" products to be designed and manufactured in the shortest possible time. In addition, the production processes are fully computerised, being driven by the latest MRPII practices. GEA also operates a number of other World Class systems to reduce lead times and provide customers with better Information :- 3D Design, CAD-CAM, and Product Data Management (PDM)

"Certify-all" scheme - The new scheme closes a number of existing loopholes and introduces the "certify-all" principle. This requires that each participating manufacturer must certify all its products marketed within all product groups covered by the scope of the programme, namely Air cooled refrigerant condensers. The certification programme covers all forced convection air cooled refrigeration condensers using axial flow fans. The programme certifies standard capacity, fan power, air volume flow, A-weighted sound power and pressure level and the external surface area of the heat exchanger. With reliable performance figures, refrigeration systems can be designed with confidence using correctly sized and matched equipment. This leads to lower capital costs and, through the choice of certified equipment, reduced running costs through improved energy efficiency.

Noise level is an increasingly important parameter in the selection and comparison of refrigeration condensers. For this reason the certification programme covers both sound power and sound pressure levels. The programme also specifies standard correction factors for alternative temperature differences (including factors taking into account of refrigerants with glide), for different refrigerants and for different fin materials. The programme uses a number of International standards as the basis for testing, including EN327 (test procedures for condensers), ISO3741/4/5, ISO9614-1 and EN13487 (for noise measurement).

Product Selection Software

Intelligence in cooling

The GEA Searle Product Selector provides an electronic catalogue covering the majority of product ranges offered by GEA Searle. The range of products available to you is very broad with many options. This software provides the fastest and easiest way to select the most appropriate product for your specific needs. GEA Searle Product Selector has been completely revised to run on the latest versions of Windows (including both 32-bit and 64-bit versions of Vista and Windows 7).

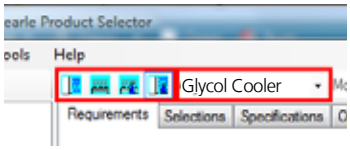

Fig 1

All four product types (Coolers, Condensers, Dry Coolers and Glycol Coolers) are now available in a single program. You can select the type of product either by clicking the icons which may be familiar to users of older versions of the program or by selecting the product type from the drop-down list. (Fig 1)



Fig 2

If you know the model number or the range you require (for example LF or LF-NB103), you can type this into the box next to the Select button. This will make the selection faster and exclude models which may not be relevant for your needs. This box will also accept wildcard characters, for example KEC*-4*. (Fig 2)

You can start a selection by clicking the Select button, by pressing F9 or by pressing Enter, and produce PDF or Excel files of your selection results. (Fig 3) The program normally operates using SI units. On the requirements screen you can choose alternative units by clicking (or right-clicking) on any unit (such as kW) to display a menu of alternative units.



Fig 3

What is important to you? - You can decide which features of the product are most important for each application: energy efficiency, footprint (physical size) and price. You adjust the slider controls to indicate the relative importance to you of each of these three elements. You can also choose to display all possible models, or just the 'top 10' which best meet your selection criteria. Once the selected models are displayed, the 'best' options in each category (energy efficiency, footprint and price) will be highlighted in yellow. (Fig 4)

These notes provide basic usage information for the March 2013, release of the GEA Searle Product Selector, version 3.5. For a more detailed overview of this new version of the software, please download the GEA Searle Product Selector from www.gea-heatexchanger.com or call your local sales representative.



Fig 4

Quality, Support and Website - Trained staff will advise you through every step of the selection process. Our customer service continues past the product delivery, and we are always on hand to advise on any issues. Keep up to date with our products and latest news by visiting the website, www.gea-heatexchanger.com

GEA Searle LF Dry cooler
encourages good design



LF Dry cooler

GEA range of Dry Air Coolers is a modular design of flat-bed and V-bank units arranged in single and double bank configurations with multiple module lengths. The new range builds on the expertise gained from many years at the forefront of dry air cooler technology resulting in the most extensive range of Dry Air Coolers created by GEA. The range of GEA dry air cooler combinations enable the closest possible matching to a required specification taking into consideration duty, cost, noise level, size and efficiency (duty/ motor input power).

Engine temperatures for electricity generators in some of the world's harshest environments are controlled by giant fluid dry coolers designed and built by GEA Searle. With substantial new investment in coating and testing facilities, GEA Searle now has the capability to produce 25% more powerful flatbed and V-bank dry coolers at the top of the DVG ranges – up to 12 metres in length, and with 20 fan sets to enhance cooling airflow. Searle's new investment in technology also benefits other dry coolers in its extensive range.

The LF range of fully weather-proofed Dry cooler is suitable for a wide variety of applications, with a duty range of 8kW to 1340kW. These capacities can be achieved both in flat-bed horizontal and vertical configurations. In addition, GEA Searle has used current market leading technologies for coil, case, fans and production techniques. GEA Searle achieves a close specification match through module length options of 1200mm, 1500mm, 1800mm and 2100 in a single (1158mm) or double (2301mm) bank configuration. The range is up to 10 fans in length, combined with coil sizes between 2 to 4 row and multiple standard fan options up to 910mm. GEA Searle is able to manufacture units up to 12m in length with 20 fans. The full fan set options are available, including the 910mm EC energy efficient fan set, which enables a highly efficient, very low noise complete fan speed-control package. Full details of the EC fan set and ideal application areas please ask your local sales representative. Due to the large number of options, selection is best achieved using the Searle selection software, online at www.gea-heatexchangers.com

LF Features

- Up to 12m long unit construction
- Coil supports replaced with centre plates for 'H' frame construction
- Side plate construction cold form to creates 'I' frame structure for strength.
- Easy of assembly due to reduced number of components
- Structural integrity maintained throughout the entire Dry Cooler range

LF - Dry air cooler

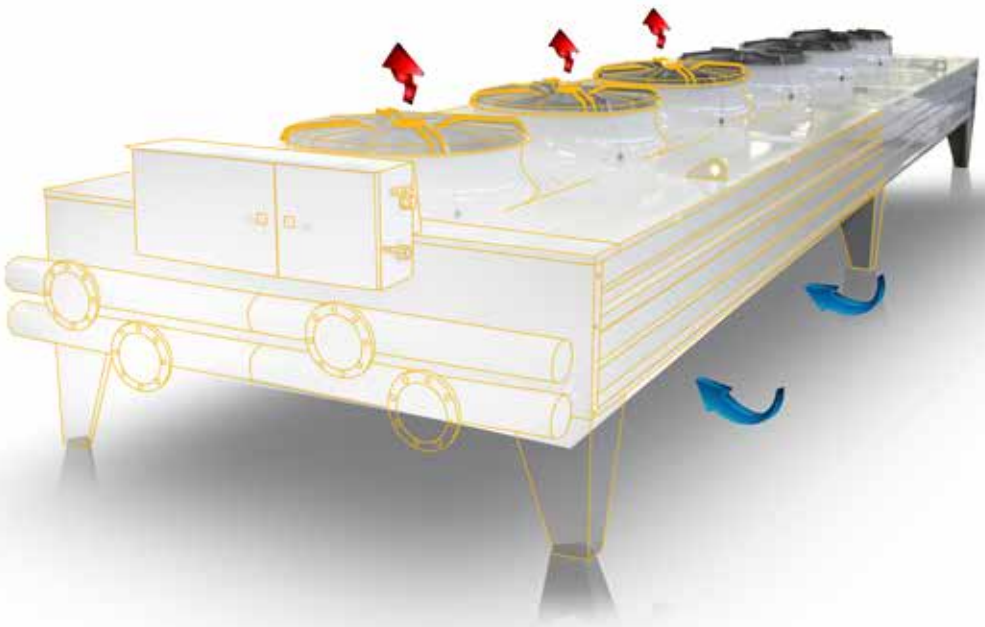

1	2		3	4	5	6	7								
L	**F**	**-**	**P**	**A**	**2**	**04**	**T**	**2**	**H**	**-**	**080**	**N**	**06**	**D**	
								8	9		10	11	12	13	

1. Liquid Dry cooler: L = Liquid Dry Cooer

2. Unit form: F = Flatbed, V = V bank

3. Module width: M = Narrow, N = Medium, P = Wide

4. Module length: A = 1200mm, B = 1500mm, C = 1800mm, D = 2100mm, E = 2400mm

5. Fan rows: 1 or 2

6. Fans per row: 1 - 10

7. Fin type: L= Louvre, T=s32

8. Coil rows: 2, 3, 4

9. Orientation: H = Horizontal, V = Vertical, X = V - bank

10. Fan Diameter: 080 = 800mm, 090 = 900mm, 091 = 910mm

11. Fan type: N = AC Normal, Q = Quiet AC, E = ebm EC, P = Ziehl EC

12. Motor pole: 6, 8, 12, EC

13. Motor wiring: Delta, Star

Fan data

Fan type & Pole	Diameter	Module	Speed (rpm)		FLC (Amp)		SC (Amp)	
			Δ	Y	Δ	Y	Δ	Y
0806 N6 Pole	800mm	A,B,C,D	920	730	4.3	4.2	2.3	14
0808 N8 Pole		A,B,C,D	670	550	2.5	2.5	1.3	6.2
091 N6 Pole	910mm	A,B,C,D	905	640	5.7	5.7	3.3	19
091 H6 Pole		A,B,C,D	910	710	5.5	5.5	3.5	19
091 N12 Pole		A,B,C,D	440	340	3.5	0.85	0.4	2
091 E - EC Technology		A,B,C,D	865-115					
091 P - EC Technology		A,B,C,D	930-90					

LF Model drawings

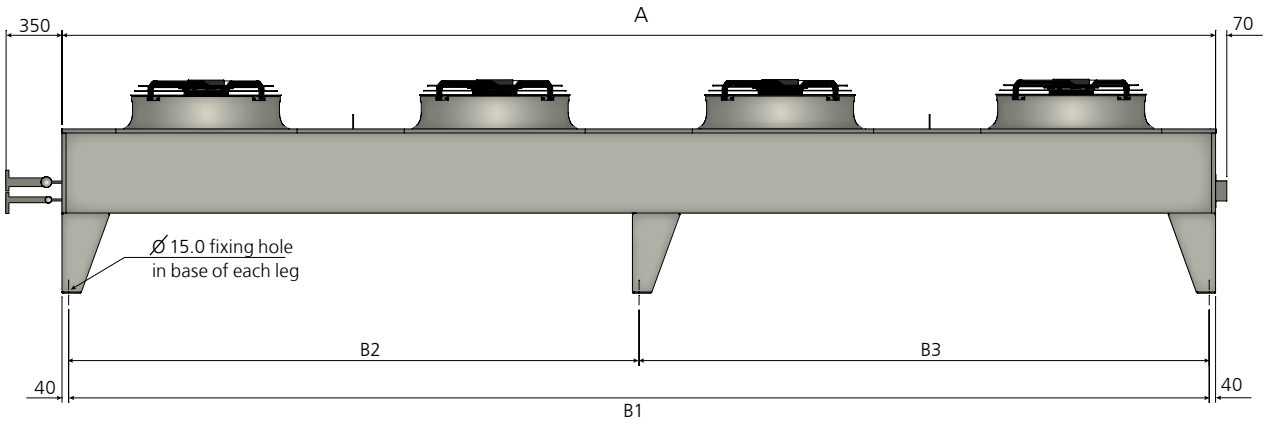

M

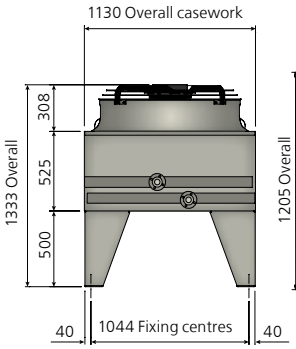

M vertical

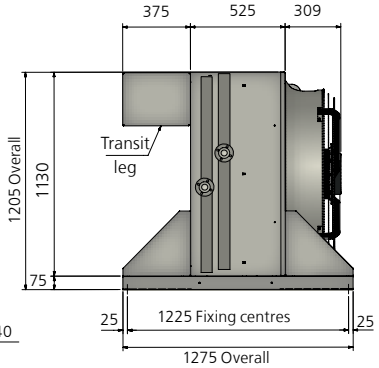

N

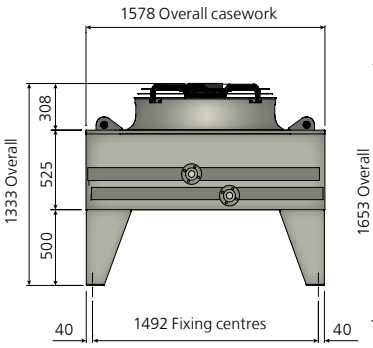

N vertical

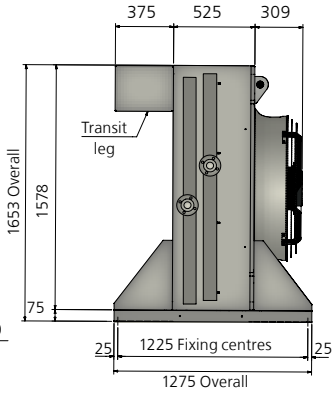

P-1 vertical

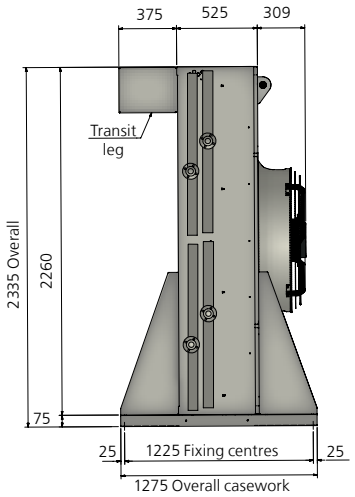

P-1

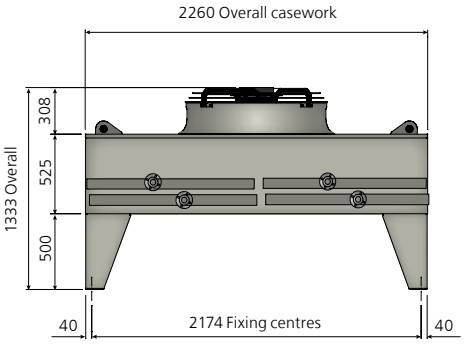

P-2 vertical

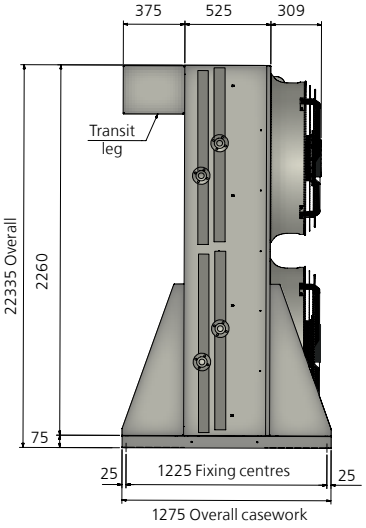

P-2

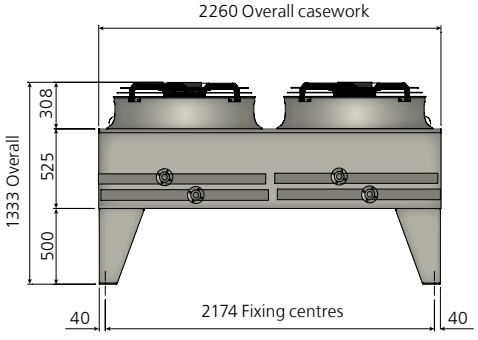

Note: All dimensions in mm. Common junction box will vary in size and position depending on the control option required.

LF - Dimensions

Unit	Module	Fan banks	Fan per banks	Dim A	Dim B1	Dim B2	Dim B3	Total Unit Dry Weight (Approx)							
								M		N		P1		P2	
								Al	Cu	Al	Cu	Al	Cu	Al	Cu
								kg	kg	kg	kg	kg	kg	kg	kg
LF-_A_01T2	1200	1 or 2	1	1203	1123			214	239	258	294	315	366	365	416
LF-_A_01T3	1200	1 or 2	1	1203	1123			226	265	276	330	340	416	390	466
LF-_A_01T4	1200	1 or 2	1	1203	1123			239	290	293	366	365	467	415	517
LF-_A_02T2	1200	1 or 2	2	2403	2323			369	421	454	526	552	655	649	752
LF-_A_02T3	1200	1 or 2	2	2403	2323			394	471	489	597	685	756	699	853
LF-_A_02T4	1200	1 or 2	2	2403	2323			419	522	524	669	652	857	749	954
LF-_A_03T2	1200	1 or 2	3	3603	3523			525	602	650	758	790	944	934	1088
LF-_A_03T3	1200	1 or 2	3	3603	3523			562	678	702	865	865	1095	1009	1239
LF-_A_03T4	1200	1 or 2	3	3603	3523			600	753	755	972	939	1247	1083	1391
LF-_A_04T2	1200	1 or 2	4	4803	4723			574	676	738	883	921	1126	1112	1316
LF-_A_04T3	1200	1 or 2	4	4803	4723			624	777	808	1025	1020	1328	1211	1518
LF-_A_04T4	1200	1 or 2	4	4803	4723			673	878	879	1168	1120	1529	1310	1720
LF-_A_05T2	1200	1 or 2	5	6003	5923			695	823	900	1081	1124	1381	1362	1618
LF-_A_05T3	1200	1 or 2	5	6003	5923			758	950	988	1259	1249	1633	1486	1871
LF-_A_05T4	1200	1 or 2	5	6003	5923			820	1076	1075	1437	1373	1885	1611	2123
LF-_A_06T2	1200	1 or 2	6	7203	7123	3562	3561	827	971	1061	1278	1328	1635	1613	1920
LF-_A_06T3	1200	1 or 2	6	7203	7123	3562	3561	891	1122	1167	1492	1477	1938	1762	2223
LF-_A_06T4	1200	1 or 2	6	7203	7123	3562	3561	966	1273	1272	1706	1626	2241	1911	2525
LF-_A_07T2	1200	1 or 2	7	8403	8323	3562	4761	969	1149	1254	1507	1562	1921	1895	2254
LF-_A_07T3	1200	1 or 2	7	8403	8323	3562	4761	1056	1325	1376	1756	1736	2274	2069	2607
LF-_A_07T4	1200	1 or 2	7	8403	8323	3562	4761	1143	1502	1499	2005	1910	2627	2243	2960
LF-_A_08T2	1200	1 or 2	8	9603	9523	4762	4761	1091	1296	1415	1705	1766	2176	2146	2555
LF-_A_08T3	1200	1 or 2	8	9603	9523	4762	4761	1190	1497	1555	1989	1964	2579	2344	2959
LF-_A_08T4	1200	1 or 2	8	9603	9523	4762	4761	1289	1699	1696	2274	2163	2982	2543	3362
LF-_A_09T2	1200	1 or 2	9	10803	10723	4762	5961	1212	1443	1577	1902	1969	2430	2396	2857
LF-_A_09T3	1200	1 or 2	9	10803	10723	4762	5961	1324	1670	1734	2223	2193	2884	2619	3311
LF-_A_09T4	1200	1 or 2	9	10803	10723	4762	5961	1436	1897	1892	2543	2416	3338	2843	3765
LF-_A_10T2	1200	1 or 2	10	12003	11923	5962	5961	1334	1590	1738	2100	2173	2685	2646	3159
LF-_A_10T3	1200	1 or 2	10	12003	11923	5962	5961	1458	1842	1913	2456	2421	3189	2895	3663
LF-_A_10T4	1200	1 or 2	10	12003	11923	5962	5961	1582	2094	2089	2812	2669	3694	3143	4167
LF-_B_01T2	1500	1 or 2	1	1503	1423			233	265	281	327	353	417	405	469
LF-_B_01T3	1500	1 or 2	1	1503	1423			248	296	303	371	384	480	436	532
LF-_B_01T4	1500	1 or 2	1	1503	1423			264	328	326	416	415	543	467	595
LF-_B_02T2	1500	1 or 2	2	3003	2923			408	472	500	591	629	757	729	857
LF-_B_02T3	1500	1 or 2	2	3003	2923			439	535	544	680	691	883	791	983
LF-_B_02T4	1500	1 or 2	2	3003	2923			470	598	588	769	753	1009	853	1110
LF-_B_03T2	1500	1 or 2	3	4503	4423			454	550	591	727	776	968	925	1117
LF-_B_03T3	1500	1 or 2	3	4503	4423			501	645	657	861	870	1158	1019	1307
LF-_B_03T4	1500	1 or 2	3	4503	4423			547	740	723	994	963	1347	1112	1496
LF-_B_04T2	1500	1 or 2	4	6003	5923			616	744	797	978	1039	1295	1237	1493
LF-_B_04T3	1500	1 or 2	4	6003	5923			678	870	885	1156	1163	1548	1361	1745
LF-_B_04T4	1500	1 or 2	4	6003	5923			740	997	973	1334	1288	1800	1485	1998
LF-_B_05T2	1500	1 or 2	5	7503	7423	2962	4461	748	908	974	1200	1272	1592	1519	1839
LF-_B_05T3	1500	1 or 2	5	7503	7423	2962	4461	826	1066	1083	1422	1428	1908	1674	2154
LF-_B_05T4	1500	1 or 2	5	7503	7423	2962	4461	903	1224	1193	1645	1583	2223	1829	2469
LF-_B_06T2	1500	1 or 2	6	9003	8923	4462	4461	880	1073	1150	1421	1505	1890	1800	2185
LF-_B_06T3	1500	1 or 2	6	9003	8923	4462	4461	913	1262	1282	1688	1692	2268	1987	2563
LF-_B_06T4	1500	1 or 2	6	9003	8923	4462	4461	1066	1451	1413	1956	1878	2646	2173	2941
LF-_B_07T2	1500	1 or 2	7	10503	10423	4462	5961	1043	1267	1357	1674	1769	2218	2114	2562
LF-_B_07T3	1500	1 or 2	7	10503	10423	4462	5961	1152	1488	15111	1985	1987	2659	2331	3004
LF-_B_07T4	1500	1 or 2	7	10503	10423	4462	5961	1260	1709	1664	2297	2204	3100	2549	3445
LF-_B_08T2	1500	1 or 2	8	12003	11923	5962	5961	1175	1431	1534	1895	2002	2515	2396	2908
LF-_B_08T3	1500	1 or 2	8	12003	11923	5962	5961	1299	1684	1709	2251	2251	3019	2664	3413
LF-_B_08T4	1500	1 or 2	8	12003	11923	5962	5961	1423	1936	1884	2607	2499	3524	3413	3917
LF-_C_01T2	1800	1 or 2	1	1803	1723			252	290	305	359	357	433	410	487
LF-_C_01T3	1800	1 or 2	1	1803	1723			271	328	331	413	394	509	447	562
LF-_C_01T4	1800	1 or 2	1	1803	1723			289	366	358	466	431	585	485	638
LF-_C_02T2	1800	1 or 2	2	3603	3523			446	523	547	656	636	790	740	893
LF-_C_02T3	1800	1 or 2	2	3603	3523			483	599	600	763	711	941	814	1045
LF-_C_02T4	1800	1 or 2	2	3603	3523			521	674	652	869	785	1093	889	1196
LF-_C_03T2	1800	1 or 2	3	5403	5323			486	601	636	798	762	992	916	1146
LF-_C_03T3	1800	1 or 2	3	5403	5323			542	715	715	959	874	1219	1027	1373
LF-_C_03T4	1800	1 or 2	3	5403	5323			598	828	794	1119	985	1446	1139	1600
LF-_C_04T2	1800	1 or 2	4	7203	7123	3562	3561	659	812	857	1074	1020	1327	1224	1531
LF-_C_04T3	1800	1 or 2	4	7203	7123	3562	3561	733	964	962	1287	1169	1630	1373	1834
LF-_C_04T4	1800	1 or 2	4	7203	7123	3562	3561	807	1115	1067	1501	1318	1933	1522	2137
LF-_C_05T2	1800	1 or 2	5	9003	8923	3562	5361	801	993	1048	1319	1248	1633	1502	1887
LF-_C_05T3	1800	1 or 2	5	9003	8923	3562	5361	894	1182	1179	1586	1435	2011	1689	2265
LF-_C_05T4	1800	1 or 2	5	9003	8923	3562	5361	987	1372	1311	1853	1621	2389	1875	2643
LF-_C_06T2	1800	1 or 2	6	10803	10723	5362	5361	974	1204	1269	1594	1507	1968	1811	2272
LF-_C_06T3	1800	1 or 2	6	10803	10723	5362	5361	1085	1431	1426	1915	1730	2421	2034	2726
LF-_C_06T4	1800	1 or 2	6	10803	10723	5362	5361	1197	1658	1584	2235	1953	2875	2258	3180
LF-_D_01T2	2100	1 or 2	1	2103	2023			271	316	328	454	395	484	450	539
LF-_D_01T3	2100	1 or 2	1	2103	2023			293	360	359	454	438	573	493	628
LF-_D_01T4	2100	1 or 2	1	2103	2023			404	404	390	516	482	661	537	716
LF-_D_02T2	2100	1 or 2	2	4203	4123			365	454	474	601	593	772	699	879
LF-_D_02T3	2100	1 or 2	2	4203	4123			408	542	536	725	350	949	786	1055
LF-_D_02T4	2100	1 or 2	2	4203	4123			631	631	597	850	767	1125	873	1232
LF-_D_03T2	2100	1 or 2	3	6303	6223			577	712	740	930	910	1179	1069	1338
LF-_D_03T3	2100	1 or 2	3	6303	6223			643	844	832	1117	1041	1444	1199	1602
LF-_D_03T4	2100	1 or 2	3	6303	6223			977	977	924	10304	1171	1709	1330	1861
LF-_D_04T2	2100	1 or 2	4	8403	8323	4162	4161	731	910	946	1199	1168	1527	1378	1737
LF-_D_04T3	2100	1 or 2	4	8403	8323	4162	4161	818	1087	1068	1448	1342	1880	1552	2090
LF-_D_04T4	2100	1 or 2	4	8403	8323	4162	4161	1263	1263	1191	1697	1516	2233	1726	2443
LF-_D_05T2	2100	1 or 2	5	10503	10423	4162	6261	884	1108	1152	1468	1426	1874	1688	2136
LF-_D_05T4	2100	1 or 2	5	10503	10423	4162	6261	993	1329	1305	1780	1643	2316	1905	2578
LF-_D_05T3	2100	1 or 2	5	10503	10423	4162	6261	1549	1549	458	2091	1861	2757	2122	3019

GEA Searle DV Dry cooler
encourages good design



DV Dry cooler

A dry cooler is a forced convection air-cooled fluid cooler. Air is forced over a finned coil which contains the working fluid such as water or water and glycol mix.

The GEA Searle V-Bank configuration are suitable for all refrigeration and air conditioning applications and can also be configured as dry air liquid coolers. With combination of 3 coil widths and 3 module langths and fans wide the available range can now achieve up to 12 metres long and has an option of 20 fans. The range is utilised across many industries and applications: Warehouses, Food storage and Food preparation.

The DV range extends the versatility of GEA Dry coolers into a V-Bank configuration with a combination of 3 coil widths and 3 module lengths, 2 fans wide. The available range has a duty from 36kW to 1088kW. GEA achieves a close specification match by offering three module length options of 1200mm, 1440mm or 1800mm across three coil width options in the small footprint V-Bank formation. The DV...M has 2 x 1524mm coils and the DV...L has 2 x 1905mm coils with 2 fans wide, all sizes offer the choice of 2 to 10 fans in length. Combined with coil sizes from 2 to 4 row coils and multiple standard fan options up to 910mm, this range of V configuration units is comprehensive. GEA now offers the EC fan, a highly efficient and very low noise complete control package. Full details of the EC fan and the best suited application areas are included in this brochure. As with all Dry air coolers, selection is best completed using the Searle selection software, either online www.gea-heatexchangers.com or from your GEA representative.

Dry Cooler Features

- Alternative fin material options
- Eurovent certified performance
- Full range of fan speed control options
- Grey powder coated casing, oven cured for a hard wearing, durable finish
- All components parts fully reliability tested
- EC fan sets available as standard

DV - Dry air cooler

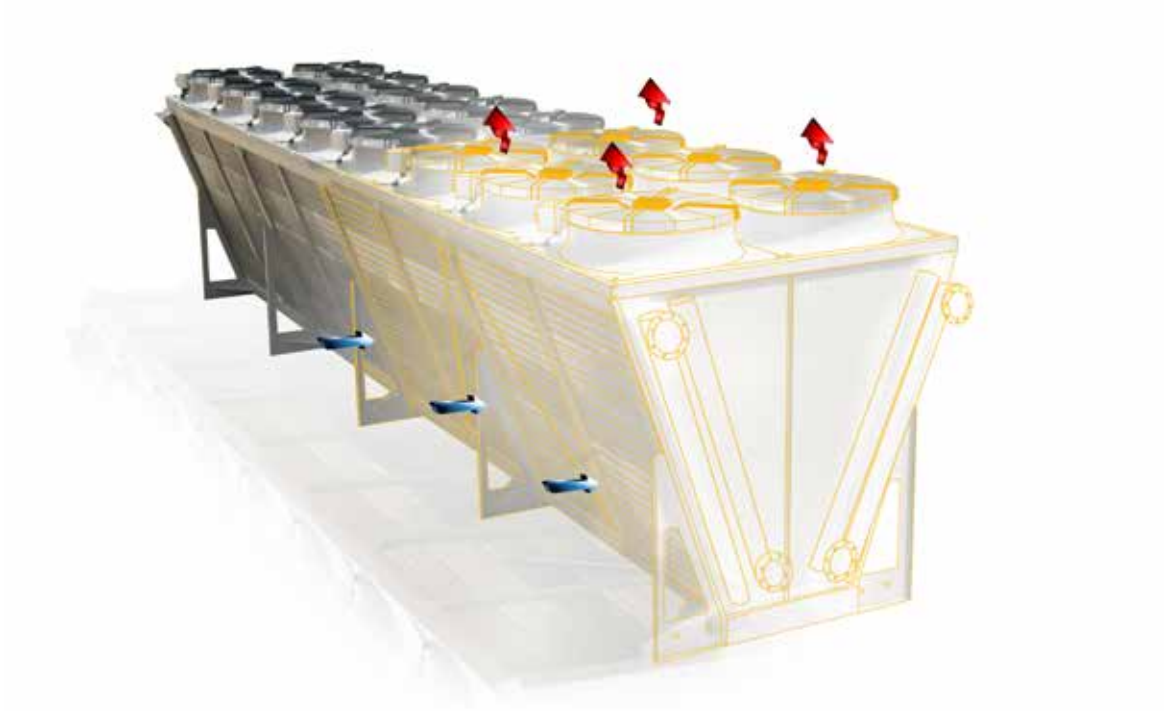

1	2	3	4	5								
DV	A	2	6	2	M	-	N8	12	D	-	AL	
					6		7	8	9		10	

1. Range: DV

2.Module size: A (1200mm), B (1440mm), C (1800mm)

3. Bank of fans: 2

4. Fans per bank 1-10

5. Coil row: 2, 3 ,4

6. Coil height: M = Medium, L = Large

7. Fan type: refer to table below

8. Motor speed: 06, 08, 12, EC

9. Power: D = Delta, S = Star

10. Coil material: AL = copper tubes/ aluminium fins,
AV = Copper tubes with 2 pack epoxy coated aluminium fins,
CU = copper tubes/ copper fins,
ET = copper tubes/copper fins electro-tinned,
Bg = copper tube/aluminium fin Blygold coated

Fan data

Fan type & Pole	Diameter	Module	Speed (rpm)		FLC (Amp)		SC (Amp)	
			Δ	Y	Δ	Y	Δ	Y
0806 N6 Pole	800mm	A,B,C,D	920	730	4.3	4.2	2.3	14
0808 N8 Pole		A,B,C,D	670	550	2.5	2.5	1.3	6.2
091 N6 Pole	910mm	A,B,C,D	905	640	5.7	5.7	3.3	19
091 H6 Pole		A,B,C,D	910	710	5.5	5.5	3.5	19
091 N12 Pole		A,B,C,D	440	340	3.5	0.85	0.4	2
091 E - EC Technology		A,B,C,D	865-115					
091 P - EC Technology		A,B,C,D	930-90					

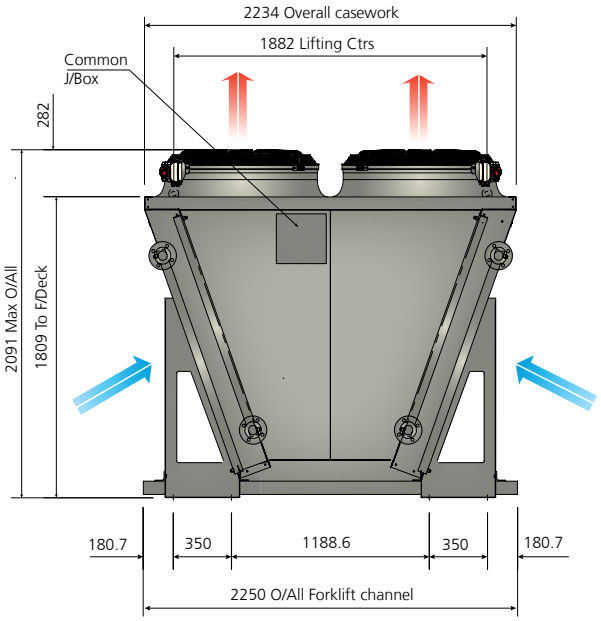
2234 Overall casework
1882 Lifting Ctrs
Common J/Box
282
2091 Max O/All
1809 To F/Deck
180.7
350
1188.6
350
180.7
2250 O/All Forklift channel

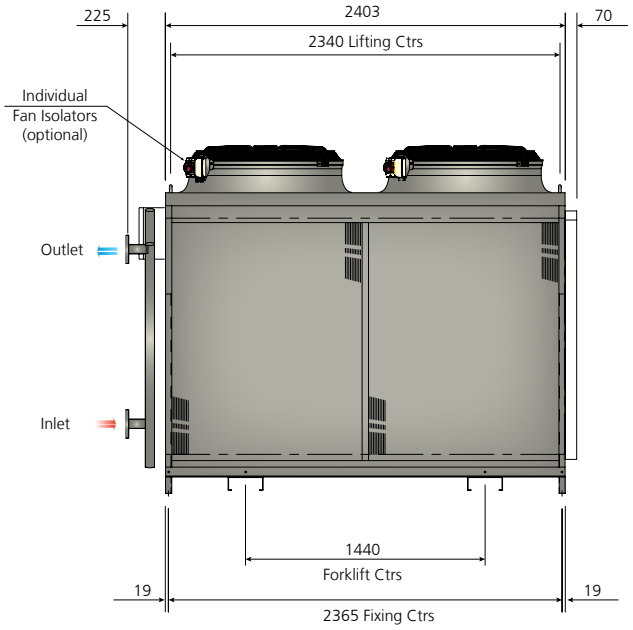
225
2403
70
2340 Lifting Ctrs
Individual Fan Isolators (optional)
Outlet
Inlet
1440
Forklift Ctrs
19
19
2365 Fixing Ctrs

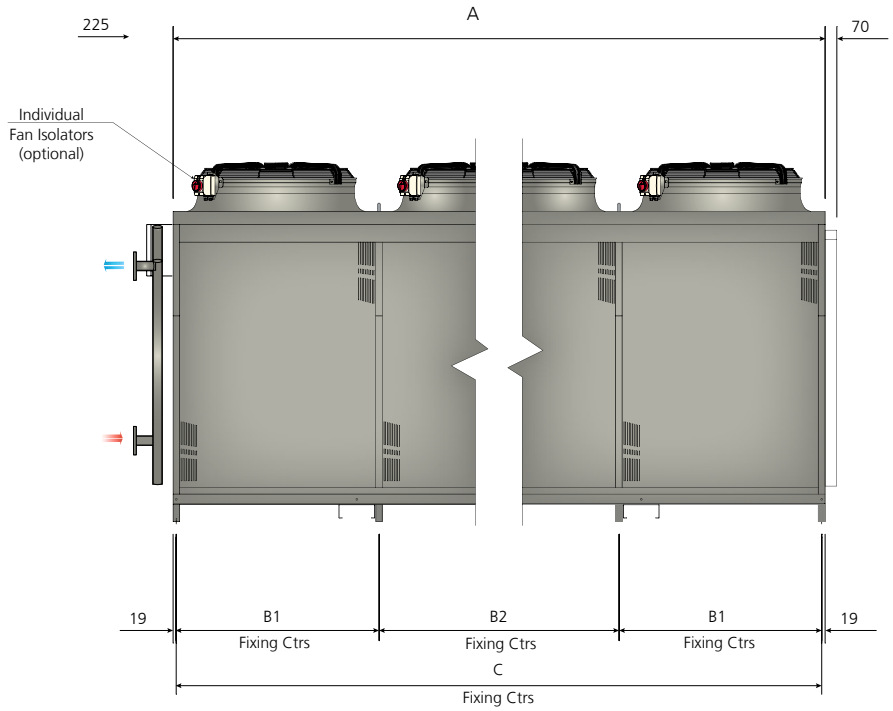
A
225
70
Individual Fan Isolators (optional)
19
B1
Fixing Ctrs
B2
Fixing Ctrs
B1
Fixing Ctrs
19
C
Fixing Ctrs

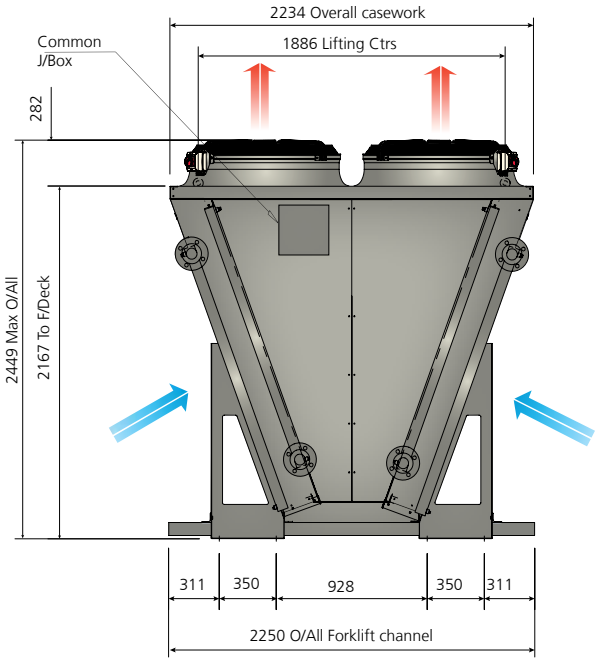
2234 Overall casework
1886 Lifting Ctrs
Common
J/Box
282
2449 Max O/All
2167 To F/Deck
311
350
928
350
311
2250 O/All Forklift channel

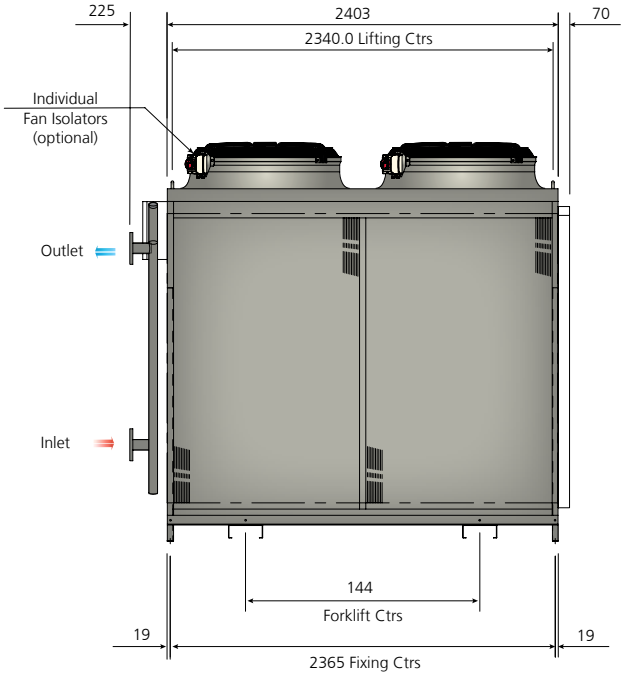
225
2403
70
2340.0 Lifting Ctrs
Individual
Fan Isolators
(optional)
Outlet
Inlet
144
Forklift Ctrs
19
19
2365 Fixing Ctrs

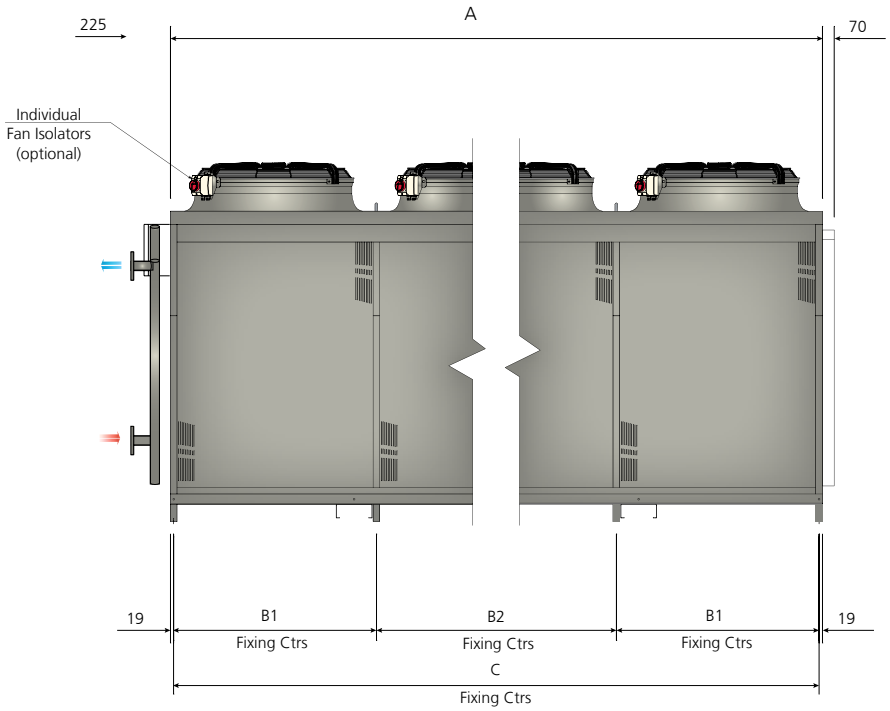
225
A
70
Individual
Fan Isolators
(optional)
19
B1
Fixing Ctrs
B2
Fixing Ctrs
B1
Fixing Ctrs
19
C
Fixing Ctrs

DV...M - Model drawings

Model		Size	No. fans	A Casework overall	B1	B2	C	Approx Dry weight	
								AL/AV	CU/ET
				mm	mm	mm	mm	kg	kg
DVA	222	M	4	2403	N/A	N/A	2365	746	856
DVA	223	M	4	2403	N/A	N/A	2365	818	998
DVA	224	M	4	2403	N/A	N/A	2365	889	1140
DVA	232	M	6	3603	1183	1200	3565	1131	1297
DVA	233	M	6	3603	1183	1200	3565	1238	1509
DVA	234	M	6	3603	1183	1200	3565	1346	1721
DVA	242	M	8	4803	1183	2400	4765	1511	1732
DVA	243	M	8	4803	1183	2400	4765	1654	2015
DVA	244	M	8	4803	1183	2400	4765	1798	2298
DVA	252	M	10	6003	2383	1200	5965	1891	1267
DVA	253	M	10	6003	2383	1200	5965	2070	2521
DVA	254	M	10	6003	2383	1200	5965	2249	2874
DVA	262	M	12	7203	2383	2400	7165	2271	2602
DVA	263	M	12	7203	2383	2400	7165	2486	3027
DVA	264	M	12	7203	2383	2400	7165	2701	3451
DVA	272	M	14	8403	2383	1800	8365	2652	3038
DVA	273	M	14	8403	2383	1800	8365	2903	3533
DVA	274	M	14	8403	2383	1800	8365	3153	4028
DVA	282	M	16	9603	2383	2400	9565	3033	3474
DVA	283	M	16	9603	2383	2400	9565	3319	4039
DVA	284	M	16	9603	2383	2400	9565	3605	4605
DVB	222	M	4	2883	N/A	N/A	2845	861	996
DVB	223	M	4	2883	N/A	N/A	2845	948	1166
DVB	224	M	4	2883	N/A	N/A	2845	1034	1336
DVB	232	M	6	4323	1423	1440	4285	1297	1498
DVB	233	M	6	4323	1423	1440	4285	1426	1753
DVB	234	M	6	4323	1423	1440	4285	1555	2007
DVB	242	M	8	5763	1423	2880	5725	1732	2001
DVB	243	M	8	5763	1423	2880	5725	1904	2340
DVB	244	M	8	5763	1423	2880	5725	2076	2680
DVB	252	M	10	7203	2863	1400	7165	2166	2502
DVB	253	M	10	7203	2863	1400	7165	2381	2927
DVB	254	M	10	7203	2863	1400	7165	2596	3351
DVB	262	M	12	8640	2863	2720	8602	2602	3005
DVB	263	M	12	8640	2863	2720	8602	2859	3514
DVB	264	M	12	8640	2863	2720	8602	3117	4023
DVC	222	M	4	3603	1783	N/A	3565	1026	1197
DVC	223	M	4	3603	1783	N/A	3565	1133	1409
DVC	224	M	4	3603	1783	N/A	3565	1241	1621
DVC	232	M	6	5403	1783	1800	5365	1544	1799
DVC	233	M	6	5403	1783	1800	5365	1705	2118
DVC	234	M	6	5403	1783	1800	5365	1866	2436
DVC	242	M	8	7203	1783	3600	7165	2061	2402
DVC	243	M	8	7203	1783	3600	7165	2276	2827
DVC	244	M	8	7203	1783	3600	7165	2491	3251
DVC	252	M	10	9003	3565	1840	8965	2579	3005
DVC	253	M	10	9003	3565	1840	8965	2847	3535
DVC	254	M	10	9003	3565	1840	8965	3116	4065

Note: For 12 metre units please refer to the selection software or call your GEA representative. Total unit dry weight is dependent upon the coil material used (AL/AV = Copper tubes with Aluminium or Copper tubes with 2 pack epoxy coated aluminium fins, CU = Copper tubes with Copper fins or Copper fins electro-tinned).

DV...L - Dimensions

Model		Size	No. fans	A Casework overall	B1	B2	C	Approx Dry weight	
								AL/AV	CU/ET
				mm	mm	mm	mm	kg	kg
DVA	222	L	4	2403	N/A	N/A	2365	882	1023
DVA	223	L	4	2403	N/A	N/A	2365	972	1200
DVA	224	L	4	2403	N/A	N/A	2365	1062	1378
DVA	232	L	6	3603	1183	1200	3565	1336	1547
DVA	233	L	6	3603	1183	1200	3565	1471	1812
DVA	234	L	6	3603	1183	1200	3565	1605	2078
DVA	242	L	8	4803	1183	2400	4765	1784	2065
DVA	243	L	8	4803	1183	2400	4765	1964	2419
DVA	244	L	8	4803	1183	2400	4765	2143	2772
DVA	252	L	10	6003	2383	1200	5965	2233	2584
DVA	253	L	10	6003	2383	1200	5965	2457	3026
DVA	254	L	10	6003	2383	1200	5965	2680	3468
DVA	262	L	12	7203	2383	2400	7165	2681	3102
DVA	263	L	12	7203	2383	2400	7165	2950	3633
DVA	264	L	12	7203	2383	2400	7165	3218	4163
DVA	272	L	14	8403	2383	1800	8365	3130	3622
DVA	273	L	14	8403	2383	1800	8365	3444	4240
DVA	274	L	14	8403	2383	1800	8365	3756	4858
DVA	282	L	16	9603	2383	2400	9565	3579	4141
DVA	283	L	16	9603	2383	2400	9565	3937	4847
DVA	284	L	16	9603	2383	2400	9565	4295	5554
DVB	222	L	4	2883	N/A	N/A	2845	1026	1197
DVB	223	L	4	2883	N/A	N/A	2845	1134	1409
DVB	224	L	4	2883	N/A	N/A	2845	1242	1622
DVB	232	L	6	4323	1423	1440	4285	1544	1800
DVB	233	L	6	4323	1423	1440	4285	1705	2118
DVB	234	L	6	4323	1423	1440	4285	1866	2436
DVB	242	L	8	5763	1423	2880	5725	2062	2403
DVB	243	L	8	5763	1423	2880	5725	2276	2827
DVB	244	L	8	5763	1423	2880	5725	2491	3251
DVB	252	L	10	7203	2863	1440	7165	2576	3002
DVB	253	L	10	7203	2863	1440	7165	2845	3533
DVB	254	L	10	7203	2863	1440	7165	3113	4063
DVB	262	L	12	8643	2863	2720	8602	3094	3606
DVB	263	L	12	8643	2863	2720	8602	3416	4242
DVB	264	L	12	8643	2863	2720	8602	3739	4878
DVC	222	L	4	3603	1783	N/A	3565	1231	1447
DVC	223	L	4	3603	1783	N/A	3565	1366	1712
DVC	224	L	4	3603	1783	N/A	3565	1500	1978
DVC	232	L	6	5403	1783	1800	5365	1851	2174
DVC	233	L	6	5403	1783	1800	5365	2053	2572
DVC	234	L	6	5403	1783	1800	5365	2254	2970
DVC	242	L	8	7203	1783	3600	7165	2433	2866
DVC	243	L	8	7203	1783	3600	7165	2740	3433
DVC	244	L	8	7203	1783	3600	7165	3008	3963
DVC	252	L	10	9003	3565	1840	8965	3053	3594
DVC	253	L	10	9003	3565	1840	8965	3427	4293
DVC	254	L	10	9003	3565	1840	8965	3762	4955

Note: For 12 metre units please refer to the selection software or call your GEA representative. Total unit dry weight is dependent upon the coil material used (AL/AV = Copper tubes with Aluminium or Copper tubes with 2 pack epoxy coated aluminium fins, CU = Copper tubes with Copper fins or Copper fins electro-tinned).

Museums and libraries

For their archiving requirements, museums and libraries require absolutely stable indoor climate conditions. Fluctuations in room humidity endanger works of art and books. Effective air treatment therefore requires far more than mere temperature control.

Office buildings with full-façade glazing

Even though outstanding passive building designs are now available, modern glass façades represent great challenges for climate control. For example: it is not rare that rooms on the building side toward the sun must be cooled while heating is necessary on the shady side.





Parking garages

Wherever internal combustion engines operate indoors, health protection is critical. Respiratory air quality is the crucial factor for ventilation and exhaust. In parking garages, ventilation systems must also be able to cope with rapid load fluctuation and high peak-performance levels.

Hotels and data centers

Feel-good climate and temperature is highly individual, whether for hotel occupants or for high tech in computer centers. The design of the air treatment plant must satisfy all demands. This also requires flexible systems and easily configurable components with top security against failure.

Here we are
Compact systems for HVAC processes

Where heating, cooling, purification, humidification, and dehumidification of air are required, HVAC Systems makes its contribution to progress. GEA specialists can exploit prepared and globally accessible knowledge within the GEA Heat Exchangers Segment – and can early in the planning stage successfully create an air-treatment system optimise for energy consumption and cost effectiveness.

Energy and gas compression stations

Since most gas-liquefaction plants are installed in dry regions or in areas where acceptable cooling-water quality is not available, air cooling has become the preferred method for the initial section of the gas-cascade cooling process.

Food and pharmaceutical processing

Any equipment used in these industries must comply with demanding environmental, health, and safety regulations. Manufactured in stainless steel, heat exchangers by GEA offer outstanding life-cycle characteristics, with extraordinary reliability in thermal performance. Their perfectly sealed liquid circuits are absolutely essential.

Automotive industry

The manufacture of motor vehicles involve numerous work steps that require cooling: pressing, welding, the use of robots and compressors, and painting. Cost-conscious solutions are likewise in demand, as well as intelligent utilisation of waste heat.



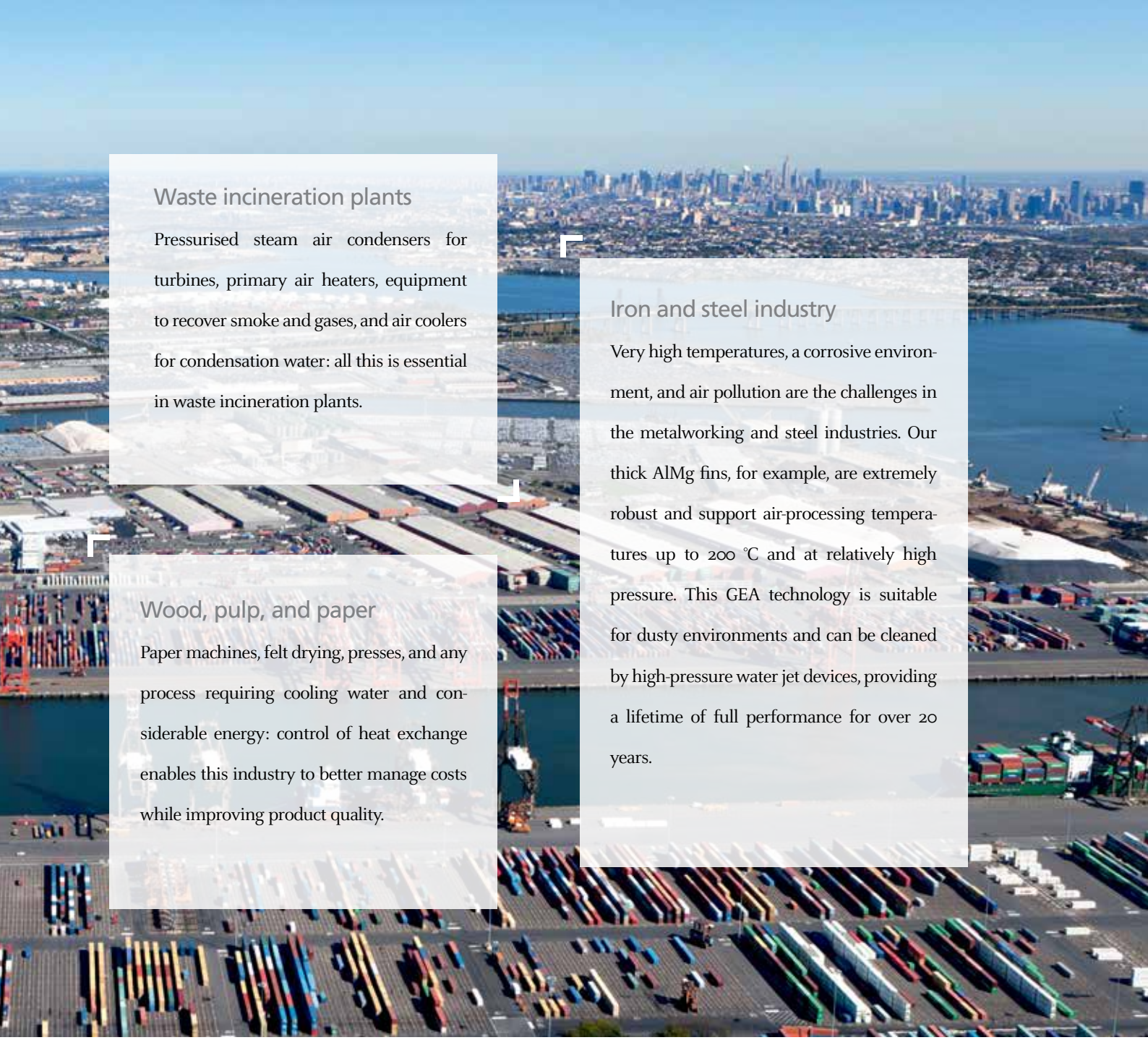

Waste incineration plants

Pressurised steam air condensers for turbines, primary air heaters, equipment to recover smoke and gases, and air coolers for condensation water: all this is essential in waste incineration plants.

Wood, pulp, and paper

Paper machines, felt drying, presses, and any process requiring cooling water and considerable energy: control of heat exchange enables this industry to better manage costs while improving product quality.

Iron and steel industry

Very high temperatures, a corrosive environment, and air pollution are the challenges in the metalworking and steel industries. Our thick AlMg fins, for example, are extremely robust and support air-processing temperatures up to 200 °C and at relatively high pressure. This GEA technology is suitable for dusty environments and can be cleaned by high-pressure water jet devices, providing a lifetime of full performance for over 20 years.

Here we are
Compact systems for an extensive range of other industries

Hardly any industrial process is imaginable without heat transfer. Drying for powder production, control of air humidity, process-water cooling, and air pre-heating – thermal transfer between materials flows always plays a key role. We work for all the world's industries. Look in almost any industrial process, and you will find GEA solutions. They are customized and feature dedicated designs for every individual case. GEA specialists are familiar with all typical process requirements: they will be more than glad to find the optimal solution for your special application..







GEA Searle Adiabatic Systems

Excellence in heat transfer

The GEA Searle Adiabatic cooling system is designed to enhance the thermal performance of air-cooled condensers and dry air coolers by reducing the effective incoming air temperature. Temperature reduction is achieved by spraying water into the incoming air via a series of sparge pipes and nozzles located adjacent to the heat exchange coils.

The energy used to evaporate the spray water results in a reduction in air temperature and an increase in humidity. GEA is offering the Behring technology ensuring a microbiologic control of water, in combining a destruction of biofilm (aggregate of solid particles potentially containing bacteria) by hydrodynamic cavitation, followed by a specific UV treatment suited to intermittent flows.

System Description - GEA adiabatic cooling systems are made up of two principal assemblies. The adiabatic control box, which can be factory fitted to air-cooled condensers and dry air coolers. The sparge and nozzle assembly is factory fitted to V bank units and supplied loose (for shipment) on flat bed units. These items are also available as a retro fit kit for site upgrades. Three versions of the adiabatic control box are available:

Option 1: Low pressure spraying - Without a pressurisation pump where the supply water pressure, at design low rate, is not less than 5 bar.

Option 2: Average pressure spraying - A low flow rate pressurisation pump where the supply water pressure, at design flow rate, is not less than 2 bar.

Option 3: High pressure misting - A high pressurisation pump (>100bars) where the supply water pressure, at design flow rate, is not less than 2 bar.

All adiabatic control boxes are fitted with water strainer, mains inlet solenoid valve, vent solenoid valve, pressure regulator and pressure gauges, pressure switch, ultraviolet lamp, hydrodynamic cavitator, scale inhibitor and a 230-volt control panel. The electronic controls are mounted in a polycarbonate box and contain a mains isolator, adiabatic sequence controller and transformer. Water is sprayed into the air stream via a sparge system made of stainless steel pipes fitted with atomising nozzles and connected together with push fittings. A drain solenoid is fitted to the lowest part of the system.



When water is passed through the ultra-violet lamp the dose of UV radiation received is lethal to pathogens - including Legionella - eliminating any health risks. Prior to this, all solid aggregates contained into the water (biofilm) have been destroyed by hydrodynamic cavitation, which will ensure an absolute effectiveness of the UV rays. GEA Searle adiabatic cooling systems conform to the design requirements of ACOP L8 "control of Legionella bacteria in water systems"and NSF55 Class A.



The adiabatic system is normally started from an external volt free signal provided by a capacity control system, BMS or emergency override. The ultraviolet lamp is switched on and the vent and drain solenoids are closed. After a set time delay the main solenoid is opened to flush the system before the pump is started.

The pressure in the system and operation of the ultraviolet lamp as well as cavitation are monitored. If the water flow falls below the required limit, or the lamp fails the system will be closed down. The ultraviolet lamp and vent/drain solenoids are cycled off at the end of the day's operation, ensuring the lamp operates at full power and that flushing is not repeated unnecessarily, no free standing water is left in the system when inactive for extended periods. At the end of the sequence, the system (downstream of the main solenoid valve) has been fully drained and blown by compressed air.



Adiabatic Features - The following benefits and features may be achieved when fitting adiabatic systems:

- Fluid temperatures lower than the ambient dry bulb can be achieved when conditions are suitable.
- Reduction in physical size of plant.
- Increasing the capacity on existing systems.
- Standby - used as emergency capacity on critical applications or upgrades.

A sequence of operation has been developed:

- To ensure no free standing water is left in the system when inactive for long periods.
- Water in the supply pipe flushes the system before high pressure nozzle spraying starts.

Technical data

Unit designation	Fan designation models and speeds (Air speed codes)							
Module Ranges	091H6D	091H6S	091N6D	091N6S	080N6D	080N6S	080N8D	080N8S
LF-A module	A	A	A	B	A	B	B	C
LF-B module	A	A	A	B	A	B	B	C
LF-C module	A	B	A	B	B	B	B	C
LF-D module	A	B	A	B	C	C	C	C
DVA - M	A	B	A	B	A	B	B	C
DVB - M	A	B	A	B	B	B	B	C
DVC - M	B	B	B	B	B	C	C	C
DVA - L	A	B	A	B	B	B	C	C
DVB - L	B	B	B	B	B	C	C	C
DVC - L	B	C	B	C	C	C	C	C

Referring to the above tables choose the Dry Cooler/Condenser module designation and fan speed and then select the relevant letter (A, B or C) for the equivalent air velocity. Refer to the tables below for the selected letter and this will give you the adiabatic effective air on temperature for the specified ambient conditions.

Example 1 - Assume LFA with 080N6D fans = Table A. assume ambient 32.0 °C dB / 50% RH / 23.6 °C dB = 27.0 °C WB effective adiabatic air on temperature

Example 2 - Assume DVA-L with 080N8D fans = Table C. assume ambient 35.0 °C dB / 40% RH / 23.9 °C dB = 25.0 °C WB effective adiabatic air on temperature.

Table A - High air velocity

Ambient °C Dry Bulb	30% RH °C Wet Bulb	Effective air on temp °C dB	40% RH °C Wet Bulb	Effective air on temp °C dB	50% RH °C Wet Bulb	Effective air on temp °C dB	60% RH °C Wet Bulb	Effective air on temp °C dB
25.0	14.4	18.6	16.2	19.7	17.9	20.7	19.5	21.7
26.0	15.1	19.5	17.0	20.6	18.7	21.6	20.3	22.6
27.0	15.8	20.3	17.7	21.0	19.5	22.5	21.1	23.5
28.0	16.5	21.1	18.5	22.3	20.3	23.4	22.1	24.8
29.0	17.2	21.9	19.3	23.2	21.2	24.3	22.9	25.3
30.0	17.9	22.7	20.0	24.0	22.0	25.2	23.8	26.3
31.0	18.7	23.6	20.8	24.9	22.8	26.1	24.7	27.2
32.0	19.4	24.4	21.6	25.8	23.6	27.0	25.5	28.1
33.0	20.0	25.2	22.4	26.6	24.5	27.9	26.4	29.0
34.0	20.8	26.1	23.1	27.5	25.3	28.8	27.3	30.0
35.0	21.5	26.9	23.9	28.3	26.1	29.7	28.2	30.9

Table B - Medium air velocity

Ambient °C Dry Bulb	30% RH °C Wet Bulb	Effective air on temp °C dB	40% RH °C Wet Bulb	Effective air on temp °C dB	50% RH °C Wet Bulb	Effective air on temp °C dB	60% RH °C Wet Bulb	Effective air on temp °C dB
25.0	14.4	16.5	16.2	18.0	17.9	19.3	19.5	20.6
26.0	15.1	17.3	17.0	18.8	18.7	20.2	20.3	21.4
27.0	15.8	18.0	17.7	19.6	19.5	21.0	21.1	22.3
28.0	16.5	18.8	18.5	20.4	20.3	21.8	22.1	23.3
29.0	17.2	19.6	19.3	21.2	21.2	22.8	22.9	24.1
30.0	17.9	20.3	20.0	22.0	22.0	23.6	23.8	25.0
31.0	18.7	21.2	20.8	22.8	22.8	24.4	24.7	26.0
32.0	19.4	21.9	21.6	23.7	23.6	25.3	25.5	26.8
33.0	20.0	22.6	22.4	24.5	24.5	26.3	26.4	27.7
34.0	20.8	23.4	23.1	25.3	25.3	27.0	27.3	28.6
35.0	21.5	24.2	23.9	26.1	26.1	27.9	28.2	29.6

Table C - Low air velocity

Ambient °C Dry Bulb	30% RH °C Wet Bulb	Effective air on temp °C dB	40% RH °C Wet Bulb	Effective air on temp °C dB	50% RH °C Wet Bulb	Effective air on temp °C dB	60% RH °C Wet Bulb	Effective air on temp °C dB
25.0	14.4	15.5	16.2	17.1	17.9	18.6	19.5	20.1
26.0	15.1	16.2	17.0	17.9	18.7	19.4	20.3	20.9
27.0	15.8	16.9	17.7	18.6	19.5	20.3	21.1	21.7
28.0	16.5	17.7	18.5	19.5	20.3	21.1	22.1	22.7
29.0	17.2	18.4	19.3	20.3	21.2	22.0	22.9	23.5
30.0	17.9	19.1	20.0	21.0	22.0	22.8	23.8	24.4
31.0	18.7	19.9	20.8	21.8	22.8	23.6	24.7	25.3
32.0	19.4	20.7	21.6	22.6	23.6	24.4	25.5	26.2
33.0	20.0	21.3	22.4	23.5	24.5	25.4	26.4	27.1
34.0	20.8	22.1	23.1	24.2	25.3	26.2	27.3	28.0
35.0	21.5	22.9	23.9	25.0	26.1	27.0	28.2	28.9

Control box and pipe schematic

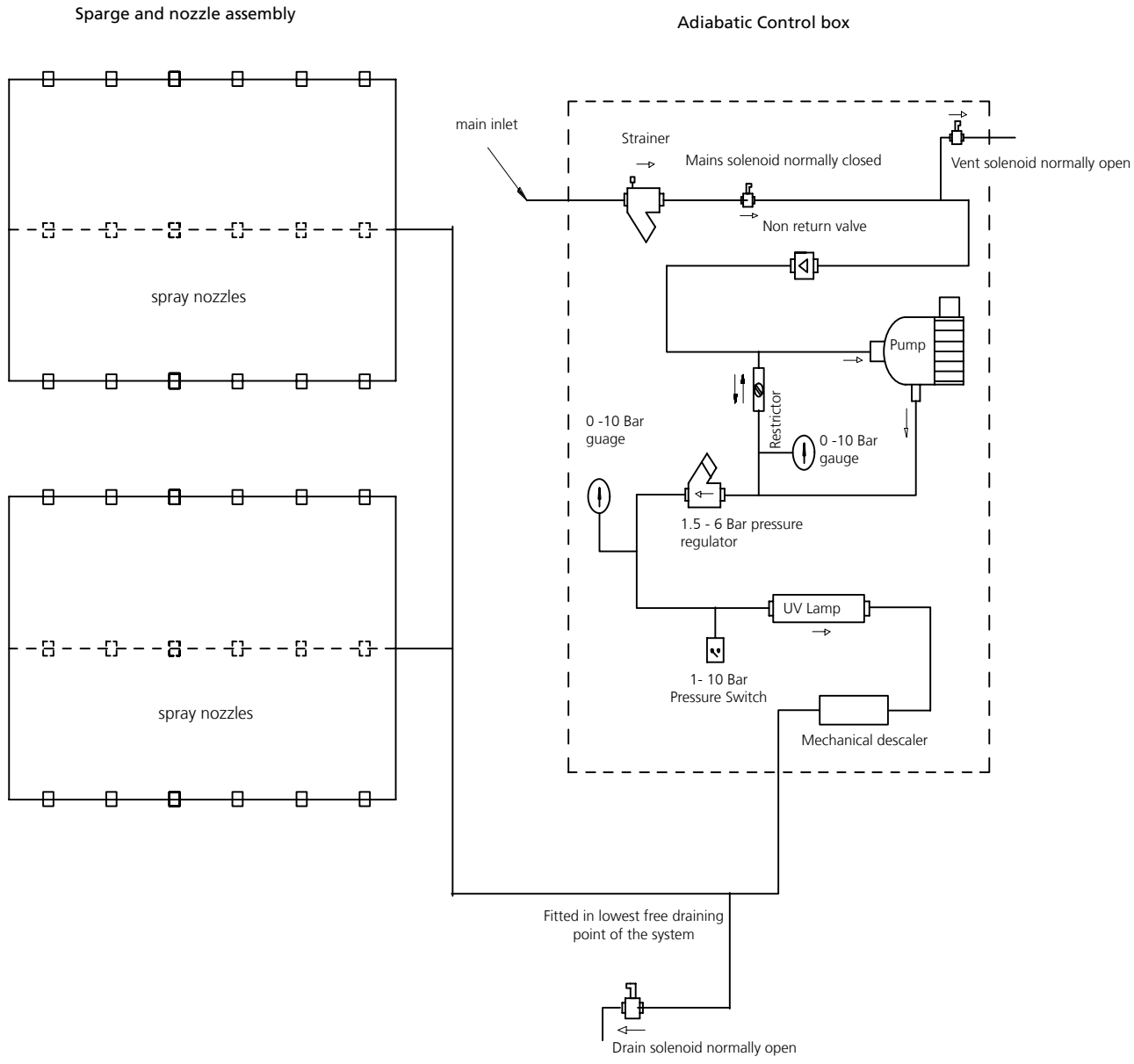

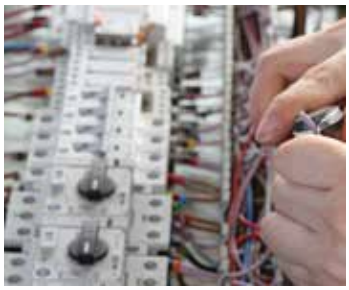

Controls Overview

The new control range is based on a modular form starting with the basic package and the various control added as extras. Except for very small units and for EC Remote Condensers and DACs, which will be 230V 50/60Hz, the Control will be 24V 50/60Hz.

- Reduced installation costs
- Latest controls systems installed
- Factory fitted system

GEA Searle Control options

Engineering at its best

GEA Searle offers a range of Controls solutions, suitable for the range of Air Cooled Condensers and Dry Air Coolers. These can be supplied factory fitted with all controls software installed and functioning so that the unit can be simply connected up and power supplied. This enables the installation time to be dramatically reduced and avoids problems using 3rd party controls.

To cut costs on double bank units a Motor Starter and Contactor per pair of fans is an option. On single bank units each contactor coil is terminated to allow the customer to provide a signal for each contactor to close. For double bank units, the contactors will be controlled in pairs. Further steps can be obtained by applying a 2 Speed Strategy (Star Delta control). This requires 2-3 contactors per fan and is a fairly costly option. Standard practice on a 12-fan unit would 6 stages of Low Speed ("Star") and 2 stages 6 Fans each of High Speed ("Delta").

Junction Box Termination - 3 Phase supply 4 core cable, A terminated 3 phase supply 4 core cable and 7 core cable containing 10V supply, 0-10V signal input, an alarm pair and RS485 communication of ACOP L8 "control of Legionella bacteria in water systems"and NSF55 Class A.

Controller options - Main Isolator, and then a MCB for each fan set with the additional options below will be provided. On very large units 1 MCB per par of fans will be provided. The EC technology provides over-load protection so only Short Circuit protection is required.

Directly connected Transducer - A "Closed Loop Control" strategy is applied to one fan set designated as the "Master" and any additional fan sets designated as "Slaves". This approach requires an external device such as a Laptop to set up the Master and alter the control settings.

Single Controller Single Controller - There are 3 main options for a single controller: 1) GEA sequential controller 2) Millennium 3) RDM. All operate in a similar manner by reading a transducer input and applying a 0-10V signal in parallel to all fansets. The GEA controller lowers operating limits to be set in terms of noise level. Fansets can be preset to have an upper speed limit so as not to exceed specified noise requirements.

Backup Control - Backup control can be provided for any FSC strategy and can take the form of pressure switches or thermostats for small condensers or DACs and extra controllers and transducers for larger units. This requirement is becoming more common.

EC Fan Sets (Electronically Commutated) - The EC fansets provide a very good Fan Speed Control solution due to the internal electronics within the fanset enabling simple control. EC fansets are now the preferred choice for Condenser applications due to the varying load requirements during a normal day-night cycle. However, due to the inherent efficiency of EC motors, their use in fluid coolers is now becoming more common. There are various control options, depending on the selection of the controller and whether back-up control is required.

AC Fanset - FSC Fan Speed Control (Temperature or Pressure). In most cases the Inverter and FCB in most cases will be contained in one enclosure. Inverter Control will change the applied frequency to the motor; the Inverter can be programmed to employ an in built PID control strategy, which can also shut down the fans when they are not required to run. Alternatively an external signal from a controller such as the RDM Varipac can be used this would allow easy connection to a network for monitoring purposes. For all EBM fan sets it is mandatory for Sinusoidal Filtering to be used. Also Consider EC fansets as an alternative they are generally more efficient and cost effective.

Control Options

- No Controls - Motor Wiring terminated in a junction box or Isolators, allowing either star or delta connections.
- FCB - Fan Contactor Box (Standard AC Motors)

A single metal IP65 enclosure issued containing the following:

- Mains Isolator.
- Motor Starter and Contactor per fan as standard

EC - Fanset

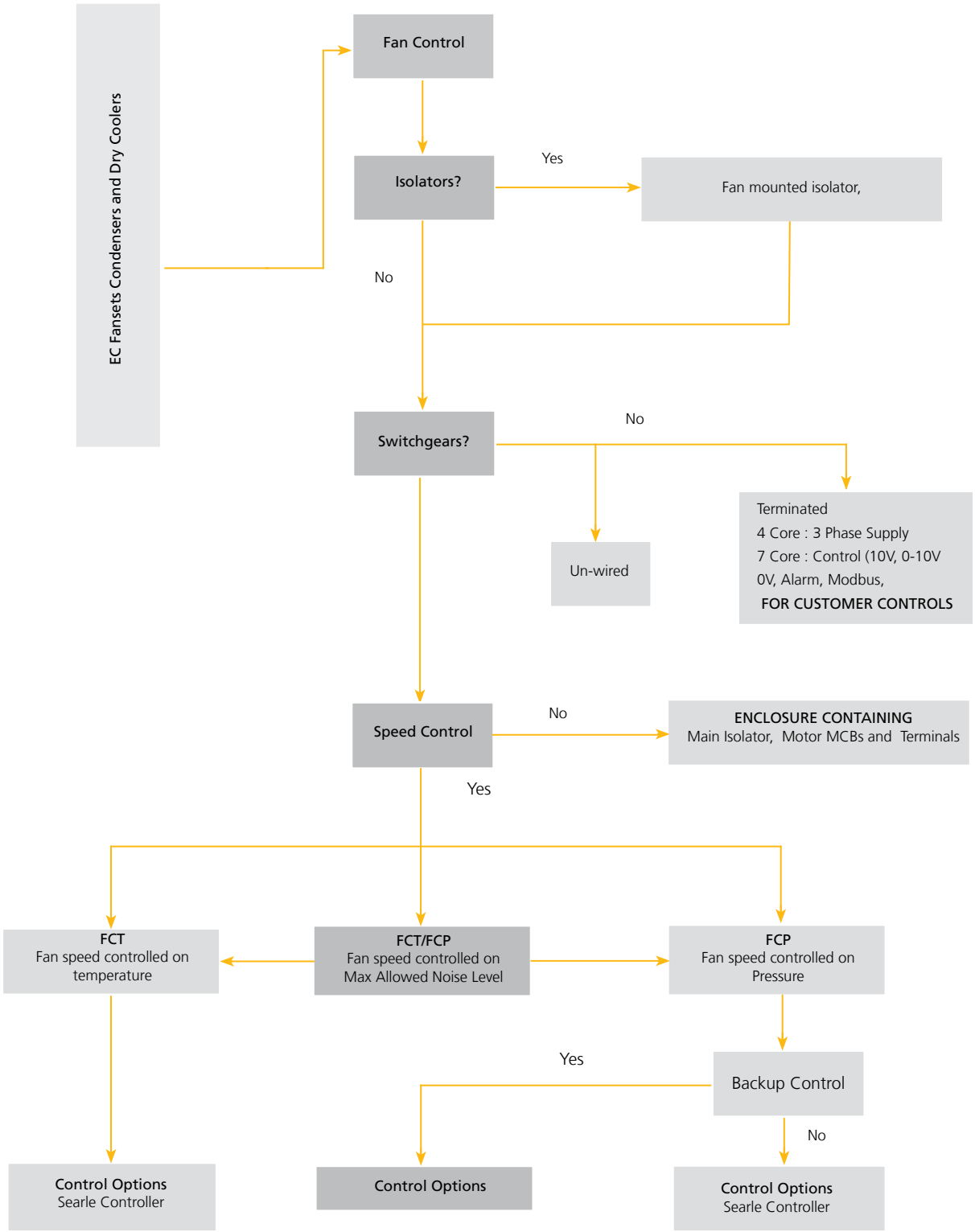
EC Fansets Condensers and Dry Coolers
Fan Control
Isolators?
Yes
Fan mounted isolator,
No
Switchgears?
No
Un-wired
Terminated
4 Core : 3 Phase Supply
7 Core : Control (10V, 0-10V
0V, Alarm, Modbus,
FOR CUSTOMER CONTROLS
Speed Control
No
ENCLOSURE CONTAINING
Main Isolator, Motor MCBs and Terminals
Yes
FCT
Fan speed controlled on temperature
FCT/FCP
Fan speed controlled on Max Allowed Noise Level
FCP
Fan speed controlled on Pressure
Yes
Backup Control
No
Control Options
Searle Controller
Control Options
Control Options
Searle Controller

AC - Fanset

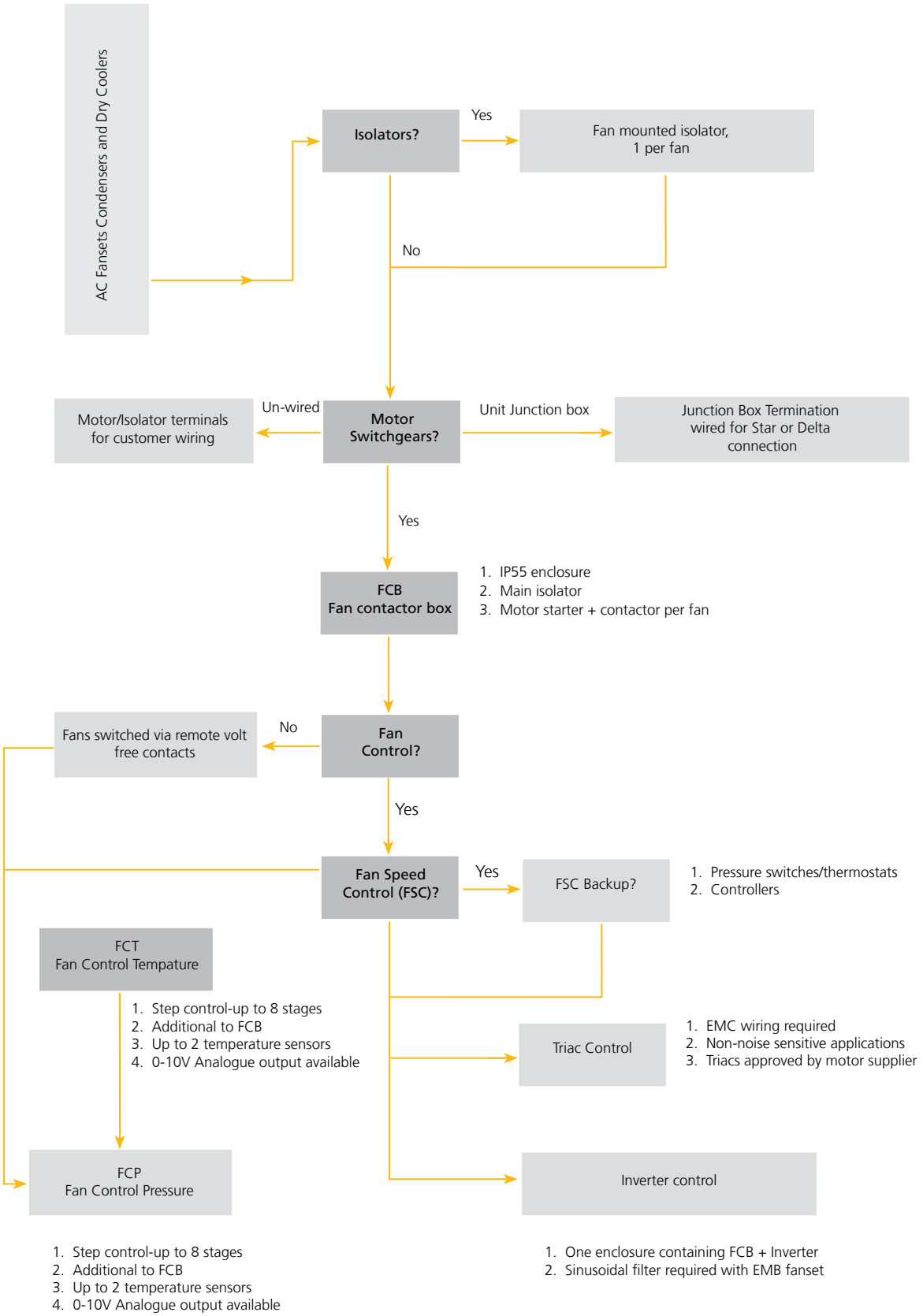
AC Fansets Condensers and Dry Coolers
Isolators?
Yes
Fan mounted isolator, 1 per fan
No
Motor/Isolator terminals for customer wiring
Un-wired
Motor Switchgears?
Unit Junction box
Junction Box Termination wired for Star or Delta connection
Yes
FCB Fan contactor box
1. IP55 enclosure
2. Main isolator
3. Motor starter + contactor per fan
Fans switched via remote volt free contacts
No
Fan Control?
Yes
Fan Speed Control (FSC)?
Yes
FSC Backup?
1. Pressure switches/thermostats
2. Controllers
FCT Fan Control Tempature
1. Step control-up to 8 stages
2. Additional to FCB
3. Up to 2 temperature sensors
4. 0-10V Analogue output available
Triac Control
1. EMC wiring required
2. Non-noise sensitive applications
3. Triacs approved by motor supplier
FCP Fan Control Pressure
Inverter control
1. Step control-up to 8 stages
2. Additional to FCB
3. Up to 2 temperature sensors
4. 0-10V Analogue output available
1. One enclosure containing FCB + Inverter
2. Sinusoidal filter required with EMB fanset



FCP-FCT Controls

The GEA sequential controller has been designed specifically for the control of air-cooled condensers and dry coolers, or either using step control or speed control, indirectly via inverter or EC technology. The controller can be configured for pressure or temperature inputs and up to 8 stages of control. There is also an analogue input that can be used to replace the input signal, adjust the setpoint or provide direct control of the outputs. A 0-10V output is available for EC or inverter control.

FCP-FCT Controls

Combined excellence in heat transfer

When factory fitted, the controllers have parameters set as per their defaults unless variations are required. For most standard applications it will only be necessary to adjust the setpoint to the required value. If the controller has been supplied as an accessory it will be required to reconfigure the controller parameters. The controller has two main functions: sequential (or step) control and speed control, both involve monitoring the control input (system pressure or fluid temperature) and switching its output relays (usually connected to fan contactors) in order to maintain the control input within a specified control band.

The sequential function is achieved by using one of two selectable control modes: RAMP and DEADBAND. Either mode can be used, but the best results are usually achieved using DEADBAND control for condensers and RAMP for dry coolers. For both modes the control band is specified by the SETPOINT at the top of the band and its range temp./press is the bottom limit of the control band. The default mode of stage rotation is “Linear” (Stage 1 on, 2 on, 2 off , 2 on, Alternatively, CIRCULAR can be selected (Stage 1 on, 2 on, 1 off 3 on 2 off, 3 off).The speed control function uses the same Control Band value as for sequential control to modulate the 0-10 V output. The output is either simply proportional (intended for use with an inverter or triac) or tuned for use with EC fan sets. Operating limits (normal and setback) can be set as either speed or noise level. A mixture of sequential and speed control can be used when close control at the minimum cost is required. However, most of the advantage of reduced noise and power consumption at lower speeds will be lost.

Sensors - The pressure and temperature sensors are supplied wired to the controller but with the sensor loose. Pressure sensors are not fitted due to vulnerability of the joint during transport. Temperature sensor location will depend on the application and is best placed on pipework slightly remote from the unit. Pressure sensors should only be fitted by qualified refrigeration engineers. Temperature sensors should be fitted to give a good thermal contact with the fluid and lagged. Heat transfer paste can be used. It is possible to calibrate sensor readings using the offset parameters. The gain of pressure sensors can be adjusted by altering the Pressure Range parameter. Both sensors can be extended up to 10m using standard cable with a minimum section of 0.75mm². If a longer extension is required then twisted pair cable must be used and the sensors will need recalibration. [probably needs revising for PT1000]

The enter key is used to move from display mode to parameter list.

In display mode the up arrow accesses a secondary screen of data. In the parameter list it increases the value of a parameter. Hold in the key down scrolls the value and the rate of scrolling increases if the key is held down fora second.

As above, but value decrease

This enters the password (11) or returns from list to display mode, accepting any changes that have been made to the current parameter.

When in basic step control mode the primary display is typically:

Top row :



- Input Value (temperature in ℃ in this case)
- Setpoint.
- Active Setpoint (S – Summer, W – Winter)

If the controller is configured for two inputs then the Input Value is the average or maximum, as specified.

Top row:

- Stage status (stage number if active, "-" if not)
- Auxiliary status (auxiliary letter if active, "-" if not)

By holding down the ▲ or ▼ keys, secondary displays can be accessed. For a typical display is:

For ▲ a typical display is:



Top row:

- Input Value (temperature in ℃ in this case)

Bottom row:

- Input Type (P - pressure, T - temperature, A - analogue)
- Input Mode (S – single, M – maximum, A – average, A – analogue)
- Auxiliary A Function (A – combined alarm, A – auxiliary stage)
- Auxiliary A Function (A – combined alarm, A – auxiliary stage)
- Night Setback (N – selected, n – deselected)
- Free Cooling (W – selected, w – deselected)
- Motor Fault (M – terminals linked, m – terminals open)
- Remote Off (R – selected, r – deselected)
- Sensor (number and o – open circuit, s – short circuit)
- Stages on hold (H followed by the number of stages waiting time delay)

For ▼ a typical display is:



Top row:

- Input Value and units
- Setpoint and units
- Free Cooling (S – Summer setpoint active
- W – Winter setpoint active) Top row
- Current Calculated Noise (Speed)
- Current Noise (Speed) Limit
- Active Noise (Speed) Limit – (D – normal, N – setback)

With the Control Mode set to analogue only the above display becomes primary. The default language is English, but alternatives are selectable at start-up or through the parameters list.

New generation of fans and motors
Combined expertise in heat transfer



The Adantages of EC Fansets

- Reduced energy usage and Low operating cost, providing short pay-back periods.
- Continuous speed control across the full operating range.
- Low noise compared to a similar unit fitted with step control.
- High efficiency across the full operational range.
- Simple to connect to AC mains supply.
- High efficiency across the full operational range to an asynchronous motor and 3 year warranty.
- Operation at peak load via the over speed function is
- pre-programmed into the control system.
- Integrated protective features; Phase failure detection; Overcurrent and temperature.
- Networked and bus-linked installations are easy to realise (RS485).
- Night time set back at night, operation at extremely low noise can be achieved through stepless speed control.
- Built in fail-safe features, including individual integrated electronics, self-regulating motors and internal motor protection.

Ziehl-Abegg Fe2 Owlet and EC technology plays an integral role in GEA Condensers and Dry Coolers providing effective capacity control whilst retaining high energy efficiency and low noise levels, all at a competitive price. These speed control fansets can provide significant benefits over alternative motors and are ideally suited to the following application areas:- Commercial refrigeration, Building HVAC, Industrial refrigeration Process Cooling, Power Generation and Convenience Stores. GEA has the technical expertise to advise and select products for any application where energy efficiency, low noise and cost effective solutions are required. EC (Electronically Commutated) technology is a tried and tested technology which has been utilised by for a number of years.

The motors used in EC fansets are simply brush-less DC motors with characteristics similar to a “shunt” motor. Unlike the conventional motors where an AC current in the stator induces the magnetic field in the rotor, EC motors use permanent magnets, so the current in the stator is used solely to generate the torque not secondary magnetic fields. Therefore, with fewer losses the EC motor is inherently more efficient than the AC motor. Conventional DC motors use brushes to switch the supply and these wear over time; the new generation of EC motors use commutation electronics to sense the rotor position and switch supply. As switching is undertaken electronically with no physical contacts there is no wear and so reliability is increased.

High Energy-saving potential - The cost of energy has nearly tripled in recent years and is predicted to rise in the future. Rising energy costs means energy efficiency is becoming a key factor within industry issue and is rising in importance on end-user criteria. A GEA unit equipped with EC technology has a high energy saving rating, which in turn, translates into lower running costs. The energy savings gained by relying on EC technology translates into short payback times when measured against the initial procurement costs. Moreover, the maintenance free and exceptionally high service life results in additional big savings.

High efficiency and low noise - The EC motor has a high efficiency at every speed. At nominal speed, there is energy saving of around 10% when compared to conventional AC options. At reduced speed the saving is substantially more pronounced. Where noise levels are a key consideration, a unit with EC technology helps by reducing perceived noise when compared to a similar unit with step control.

Fail-safe safety - Refrigeration plants operate 24 hours a day, therefore, both energy costs and fail-safety are crucial factors. EC motors are equipped with several fail-safe features helping to ensure disruption is minimal in the event of a failure. Each motor is fitted with an individual power unit, unlike traditional units with a single inverter. Should an EC fan inverter fail the other fans on the unit will remain fully functioning and in most cases compensate for the loss of one fan. In addition each fanset has internal motor protection.

GEA Searle General information
Dry Air Coolers

Controls and other Options - There are various optional GEA control packages available, including variable speed controlled products using GEA inverter control or the latest EC fan control systems. The control option include: EC speed control Inverter speed control, Triac speed control, Dual speed step control, Single speed step control. If a speed control method is utilised, GEA recommends adding the option of internal motor protection. GEA offers a wide range of accessories and additional options, including: anti-vibration mounts and leg extensions - to enhance air flow in difficult locations and Adiabatic cooling system (Please see GEA Adiabatic Section for further details or contact your GEA representative)

Vertical mounting - Units maybe specified as horizontal (standard) or vertical orientation.

Coils - Coils are manufactured from high-quality materials ensuring a quality product without compromise. These coils have been tested extensively in GEA Research & Development facility to ensure performance. Standard coils are manufactured from copper tubes, which are mechanically expanded into fully collared holes in the fins. This ensures an effective and permanent bond between the tube and the fin, maximising heat transfer characteristics. Within the coil casework surround, each fan chamber is separated by internal baffe plates to prevent windmilling of off-cycle fans. Alternative fin materials are available to give added protection in polluted or saline atmospheres: -

- Cu/Av - Copper tube / Aluminum fins ,
- Cu/Cu - Copper tubes / copper fins,
- Cu/Et - Copper tubes / electro tinned copper fins,
- Cu/Al/Bg - Copper tubes / aluminum fins Blygold coated.

All standard coils are fully leak and strength tested to 36 bar for a maximum operating pressure of 27 bar.

Free Cooling - A solution to reduce your running costs and your carbon foot print.

For all air conditioning and chilled water cooling applications which run throughout the year – data centres, industrial applications and other areas with a large number of people. Our dry coolers provide a highly profitable solution for the free production of chilled water for new plants and improves the energy efficiency of existing ones. There are 2 possible systems: 1. Installing in series with a chiller – The dry cooler is placed in front of the evaporator and runs in winter by injection (more than 4000 hours < 10°C in Paris). The chiller continues to run to top-up the capacity, if necessary, in order regulate the final temperature. In summer time, the dry cooler does not affect the running of the chiller.

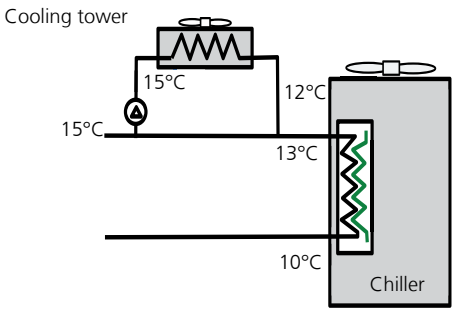

2. Installing in parallel with a chiller. The system switches between the dry cooler and the chiller based on the system requirements

Formula for calculating noise data at specific distance

sound power level-sound power correction + correction factor for multiple fans

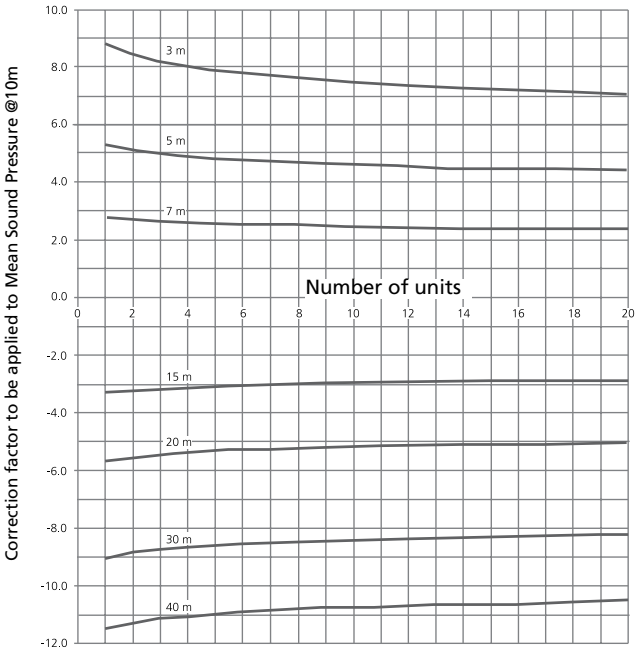

Sound Pressure Correction for Distance - The chart gives correction factors for use with mean sound pressure values for a distance of 10 m, For example, for a 4 fan unit with the catalogue level of 62 dBA the correction factor for 3m is 8.0. Therefore the mean sound pressure level at 3 m for this unit is 70 dBA. The correction values are averages for all models so the tolerence for noise levels calculated with them is ±3 dBA. Results should be rounded to the nearest 1 dBA.

Noise Data - The mean unit sound pressure data at 10m is given for each model in the catalogue and is certified as part of the Eurovent scheme. Sound power testing and sound pressure calculation are carried out in accordance with EN13487. Mean sound pressure levels are for a parallel piped surface surrounding the unit on a reflective plane. Power levels and sound spectrum are available on request.

Fansets - The fansets chosen for the range offer the best combined performance for air volume, noise and efficiency available in the refrigeration industry, customers can select the latest EC technology, offering high efficiency and speed controllability.

Energy Labeling - Energy Labeling is now part of the Eurovent Certify-All scheme. Rating is based on the ratio of nominal duty to power input with banding as in the table below. Where R= Nominal Capacity Total fan power input.

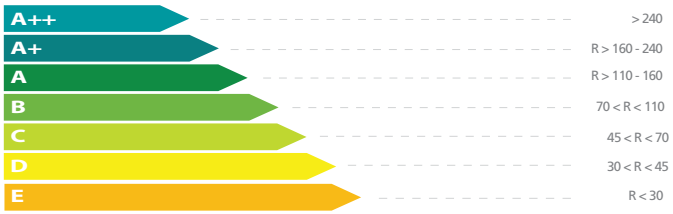

Blygold® Coating - Blygold® coating is applied and cured to protect the finned coils against harsh environmental conditions such as erosion by sand or salt. It provides a barrier and avoids the risk of electrolytic reactions between the two metals involved.

Your GEA experts for commercial and industrial refrigeration

Reachable always and everywhere

Europe

Center of Excellence
GEA Searle
20 Davis Way, Newgate Lane
Fareham, Hampshire
PO14 1AR, United Kingdom
Phone: + 44 (0) 1329 823344
searle.hx.uk@gea.com

GEA Ergé-Spirale et Soramat SAS2,
rue de l'Electrolyse
62410 Wingles, France
Phone: +33 3 21 69 89 00
info.erge.fr@gea.com

GEA NEMA Wärmetauscher GmbH
Friedensstraße 3a
08491 Netzschkau, Germany
Phone: +49 3765 492-0
nema@gea.com

GEA Maschinenkühltechnik GmbH
Südstraße 48
44625 Herne, Germany
Phone: +49 2325 468-801
info-gmt@gea.com

GEA Heat Exchangers Ltd.
20 Davis Way, Newgate Lane,
Fareham, Hampshire,
PO14 1AR United Kingdom
Phone: +44 1329 823344
info.searle.uk@gea.com

GEA Polska Spolka Z O.O.
Ul. Sikorskiego 38
58-160 Swiebodzice, Poland
Phone: +48 74 8500 800
info.polska.pl@gea.com

GEA EGI Contracting/
Engineering Co. Ltd.
4-20. Irinyi J. Str.,
Science Park, Building "B"
H-1117 Budapest, Hungary
Phone: +36 1 225-6100
eginfo@gea.com

Africa

GEA Ergé-Spirale et Soramat SAS
2, rue de l'Electrolyse
62410 Wingles, France
Phone: +33 3 21 69 89 00
info.erge.fr@gea.com

Asia

GEA IHE Systems (China) Co. Ltd.
No. 8 Yangtian Road, Jiujiang
Economic Development Area,
241007 Wuhu Anhui, China
Phone: +86 553-5951222-0
info-ihe-china@gea.com

GEA IHE Systems India
F-602, SAI ANSH,
Opp. Jui Nagar Station (W),
Plot no. 7, Sector 11, Sanpada,
Navi Mumbai - 400705, India
Phone: +91 98204 53979
jayakumar.nair@gea.com

EGI Cooling System Trading Ltd.
Unit 716, Tower 2, Landmark Towers,
No. 8 Dongsanhuan Beilu,
100004 Beijing, China
Phone: +86 10-6590-7558
eginfo@gea.com

Oceania

GEA IHE Systems (China) Co. Ltd.
No. 8 Yangtian Road, Jiujiang
Economic Development Area,
241007 Wuhu Anhui, China
Phone: +86 553-5951222-0
info-ihe-china@gea.com

North Amercia

GEA Rainey Corp.
5202 West Channel Road,
Catoosa OK 74015-3017, USA
Phone: +1 918 266 3060
info.rainey.us@gea.com

South America

GEA do Brasil Intercambiadores Ltda.
Estrada SP 354 km 43,5 - Serra
dos Cristais Franco da Rocha -
SP - CEP 07803-970, Brazil
Phone: +55 11 4447-8800
vendas.gdb@gea.com



Sales / Distribution

Production / Manufacturing



Expect one-stop solutions

By concentrating various performance fields into a single, one-stop solution, GEA enables more effective control of the complex processes in refrigeration. It also speeds up order execution and simplifies preventive and remedial maintenance of refrigeration facilities. In this way, GEA creates clear and personally addressable responsibility for the entire process of project implementation. In a global, tightly meshed network, our highly qualified staff provides all key processes in industrial production and air treatment. GEA has set a new standard for efficiency, reliability, and availability in refrigeration. With production and service locations around the world, GEA offers – based on a single-source technology – a unique industrial network to provide excellence in engineering and expertise in local services and comprehensive support of our customers in a wide range of dedicated applications.

We live our values.

Excellence • Passion • Integrity • Responsibility • GEA-versity

GEA Group is a global engineering company with multi-billion euro sales and operations in more than 50 countries. Founded in 1881, the company is one of the largest providers of innovative equipment and process technology. GEA Group is listed in the STOXX® Europe 600 Index.

GEA Heat Exchangers

GEA Searle

20 Davis way, Newgate Lane, Fareham, Hants, PO14 1AR
Phone: +44 (O) 1329 823344, Fax: +44 (0) 1329 821242
searle.hx.uk@gea.com, www.gea-heatexchangers.com

GEA Searle Dry cooler brochure March 2014 272-000-401