A3 DO NOT SCALE THIRD ANGLE PROJECTION IF IN DOUBT ASK

"This document is protected by copyright, and the design it contains is protected by both copyright and design right. All such rights being owned by ICG (UK) Limited. This document may also contain information which is confidential to that Company. Neither this document nor the design or information which it contains may therefore be used, sold, licensed, transferred, copied, lent, disclosed to any third party or otherwise reproduced in whole or in part in any manner or form either than with the prior written consent of that Company.

© [20] ICG (UK) Limited All Rights Reserved "

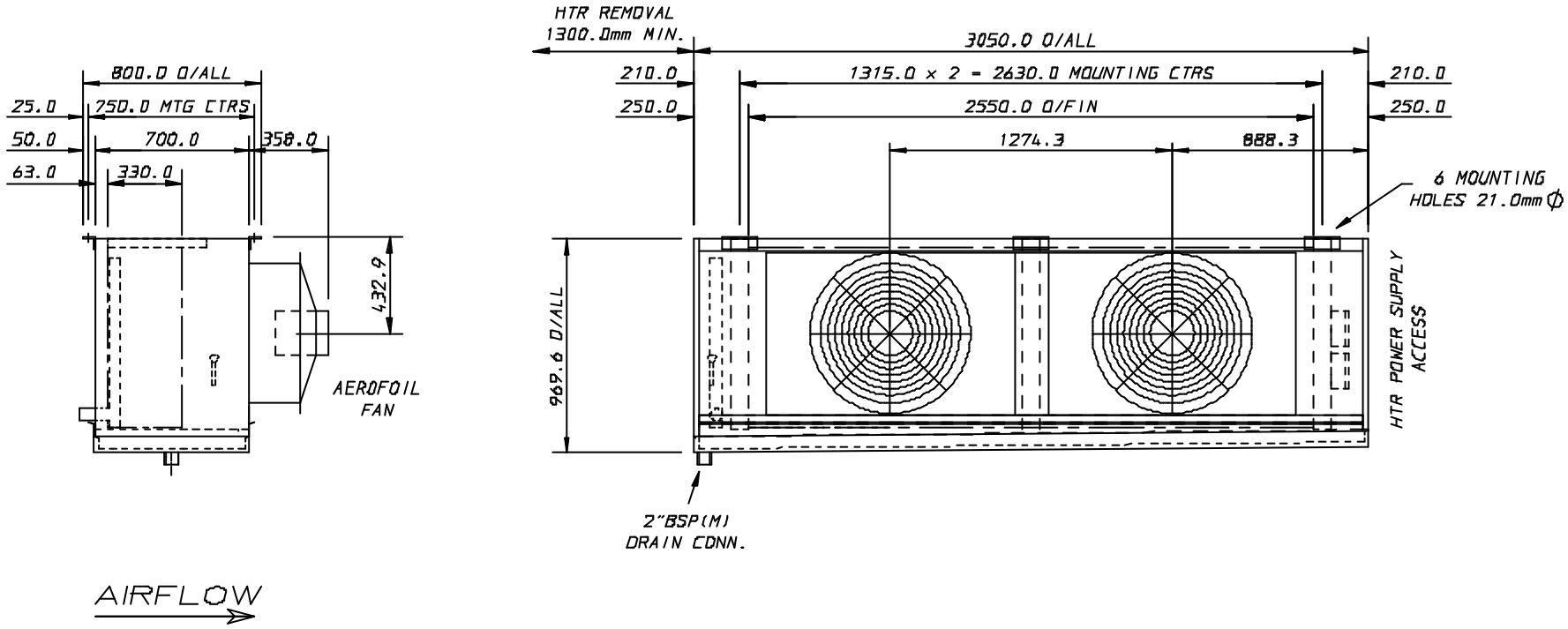

UNIT SIZE & ROWS DEEP	6 MM FIN SPACING						DEFROST KW	
	CONNECTION SIZES		WEIGHT KG		AEROFOIL 630mm DIA			
	INLET	SUCTION	AL	CU	KW	FLC	BLOCK	D/TRAY
SM162-6ROW	1.1/8"	2.1/8"	436	~~558~~	1.15	1.4 A	16.0	3.2

ISS	MODIFICATION	SCN	DATE	SCALE 1:20	TOLS ±5.0mm UNLESS OTHERWISE STATED	MATERIAL ----	FINISH GLOSS WHITE RAL9010	searle MANUFACTURING COMPANY NEWGATE LANE FAREHAM HANTS PO14 1AR
				DATE 10/11/00	DESCRIPTION SM162-6ROWS 6mmFIN high velocity			PART No. SM162-66-A3
				DRAWN CAJ / CHECKED CAJ	FOR N/A		JOB No.	DRG. FILE REF SM162-66-A3

ISS 01

A3 DO NOT SCALE THIRD ANGLE PROJECTION IF IN DOUBT ASK

"This document is protected by copyright. and the design it contains is protected by both copyright and design right. all such rights being owned by ICG (UK) Limited. This document may also contain information which is confidential to that Company. Neither this document nor the design or information which it contains may therefore be used. sold. licensed. transferred. copied. lent. disclosed to any third party or otherwise reproduced in whole or in part in any manner or form other than with the prior written consent of that Company.

© [20] ICG (UK) Limited. All Rights Reserved."

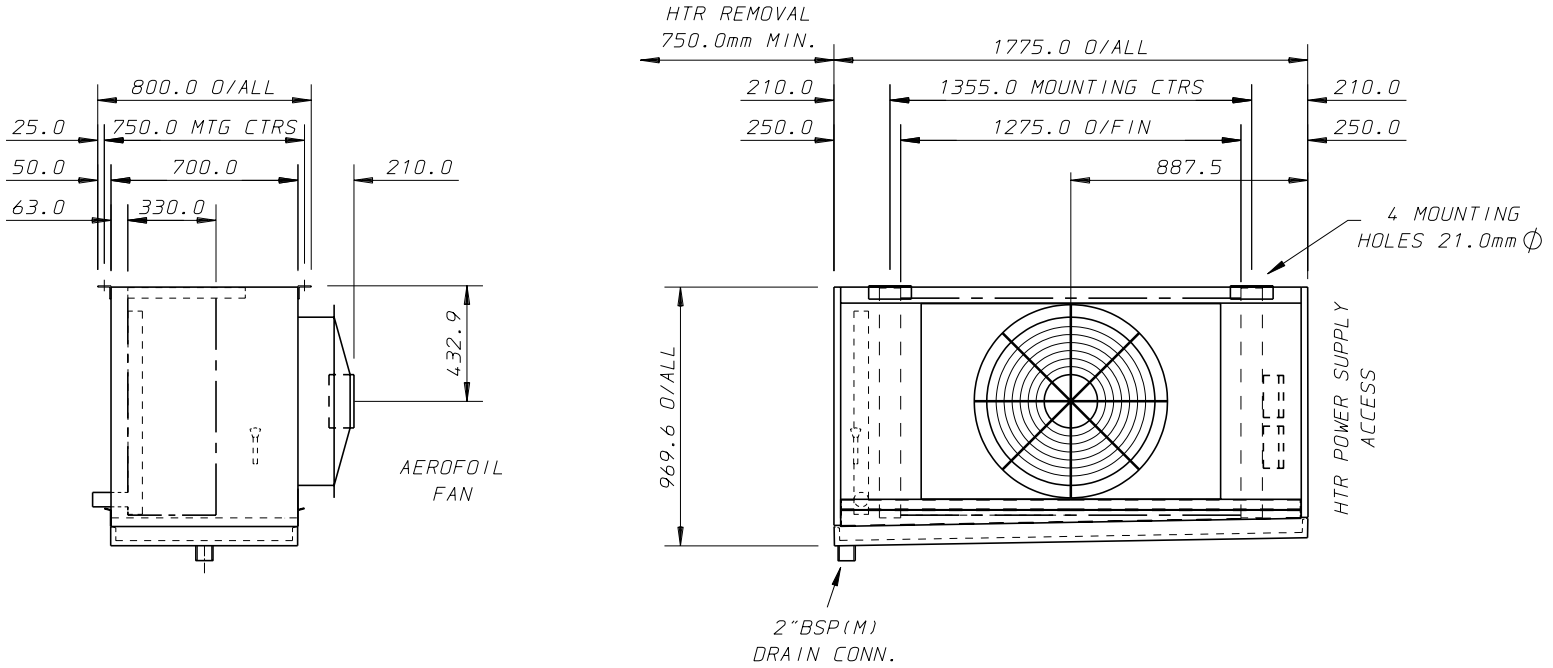

AIRFLOW →

UNIT SIZE & ROWS DEEP	4 MM FIN SPACING						DEFROST KW	
	CONNECTION SIZES		WEIGHT KG		AEROFOIL 630mm DIA			
	INLET	SUCTION	AL	CU	KW	FLC	BLOCK	D/TRAY
SM161-6ROW	5/8"	1.3/8"	248	309	0.68	1.4 A	8.0	1.6

ISS	MODIFICATION	SCN	DATE

TOLERANCES ASSEMBLY UNLESS OTHERWISE STATED
SIMPLE ASSY'S (2 to 3 Parts) ±1.0mm
COMPLEX ASSY'S (Multiple Parts) ±3.0mm

MATERIAL

FINISH: GLOSS WHITE RAL9010

searle MANUFACTURING COMPANY
NEWGATE LANE FAREHAM HANTS PO14 1AR

DATE: 02/06/03 | SCALE: 1:20 | PART: SM161-6ROWS 4mmFIN low velocity | PART No.: N/A | ISS: 01

DRAWN: DJM | CHECKED: DJM | FOR: N/A | JOB No.: LISA | DRG. FILE REF: SM161-64-A1

A3 DO NOT SCALE THIRD ANGLE PROJECTION IF IN DOUBT ASK

"This document is protected by copyright, and the design it contains is protected by both copyright and design right. All such rights being owned by ICG (UK) Limited. This document may also contain information which is confidential to that company. Neither this document nor the design or information within it contained may be used, sold, licensed, exploited, copied, lent, disclosed to any third party or otherwise reproduced in whole or in part in any manner or form other than with the prior written consent of that Company.

©20] ICG (UK) Limited All Rights Reserved "

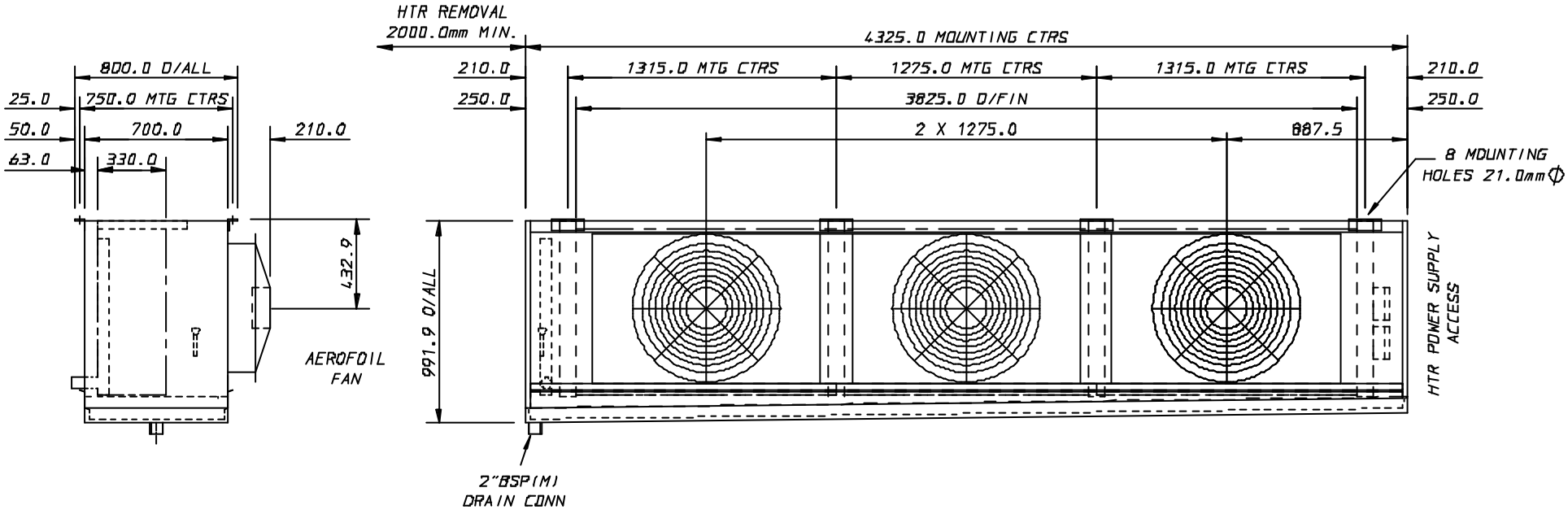

AIRFLOW →

UNIT SIZE & ROWS DEEP	6 MM FIN SPACING							
	CONNECTION SIZES		WEIGHT KG		AEROFOIL 630mm DIA		DEFROST KW	
	INLET	SUCTION	AL	CU	KW	FLC	BLOCK	O/TRAY
SM163-6ROW	1.1/8"	2.1/8"	625	~~888~~	0.68	1.4 A	24.0	4.8

				SCALE 1:20		TOLS ±5.0mm UNLESS OTHERWISE STATED	MATERIAL ----	FINISH GLOSS WHITE RAL9010	searle MANUFACTURING COMPANY NEWGATE LANE FAREHAM HANTS PO14 1AR
				DATE 07/11/00		DESCRIPTION SM163-6ROWS 6mmFIN low velocity			PART No. SM163 66 A1 ISS 01
ISS	MODIFICATION	SCN	DATE	DRAWN CAJ	CHECKED CAJ	FOR N/A		JOB No. N/A	DRG. FILE REF SM163-66-A1