HORIZONTAL UNIT

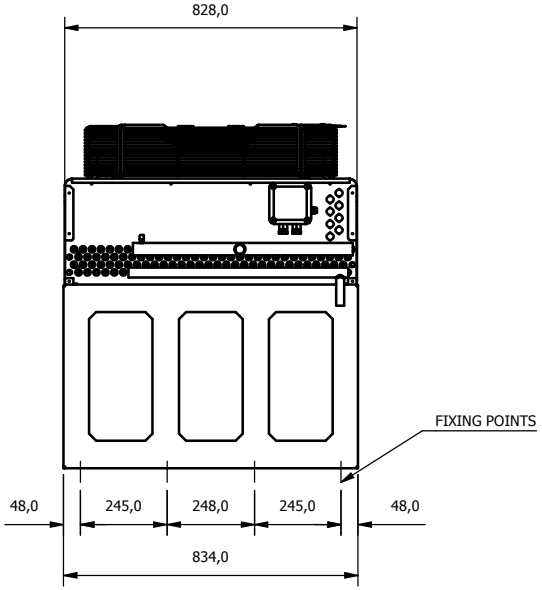

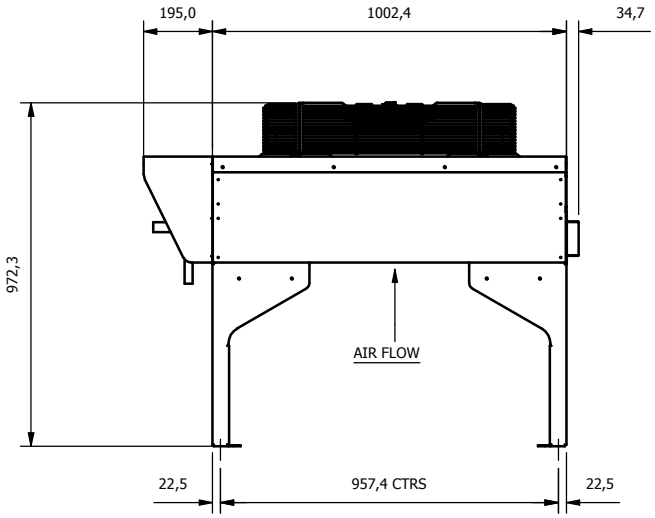

CAUTION ISOLATE UNIT FROM ELECTRICITY SUPPLY BEFORE UNDERTAKING ANY MAINTENANCE WORK

3 PHASE MOTOR - 400V-3Ph-50Hz
1 PHASE MOTOR - 230-1Ph-50Hz

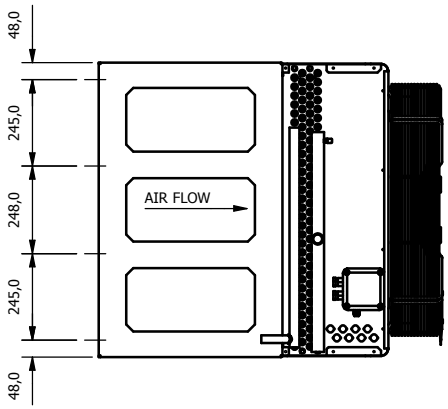

VERTICAL UNIT (WALL MOUNTED)

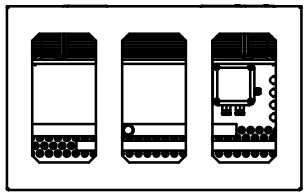

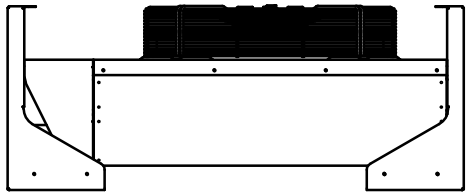

TRANSIT ASSY

1	First Issue For Production		02/03/2015	D_Phillips
ISSUE	MODIFICATION DETAILS	ECN No.	DATE	BY

REVISION HISTORY

Tolerances - Unless Otherwise Stated
Simple Assemblies (Max 3 Parts) ± 1,0mm
Complex Assemblies (Multiple Parts) ± 3,0mm

GEA Searle

© GEA Searle - All Rights Reserved
"This document is protected by copyright, and the design it contains is protected by both copyright & design right, all such rights being owned by GEA Searle Ltd. The document may also contain information which is confidential to that Company. Neither this document nor the design or information which it contains may therefore be used, sold, licenced, transferred, copied, hired, disclosed to any third party or otherwise be reproduced in whole or in part on any manner or form than with the prior written consent of that Company."

Job Id	Project No. / Customer: EP1273	Description: SALES OUTLINE RF-SJ101L4H	
Document Type: Final Assembly		Material: Multiple Parts - See BOM	
Created By: D_Phillips	Creation Date: 02/03/2015	Weight: N/A	Finish: RAL7032 - Pebble grey
Approved By: DJH	Approval Date: 02/03/2015	Part No. / 3D Model Ref: RF-SJ101L4H	Number of Sheets: 1 of 1
THIRD ANGLE PROJECTION	DO NOT SCALE IF IN DOUBT ASK	Drawing / File Ref: RF-SJ101L4H.dwg	A3 / Issue 1

HORIZONTAL UNIT

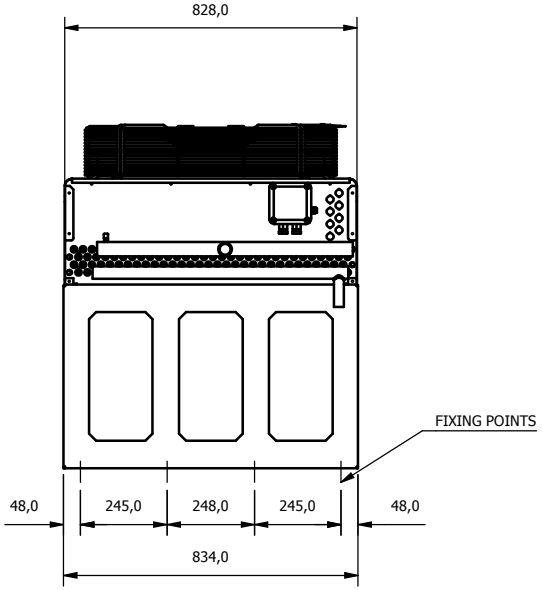

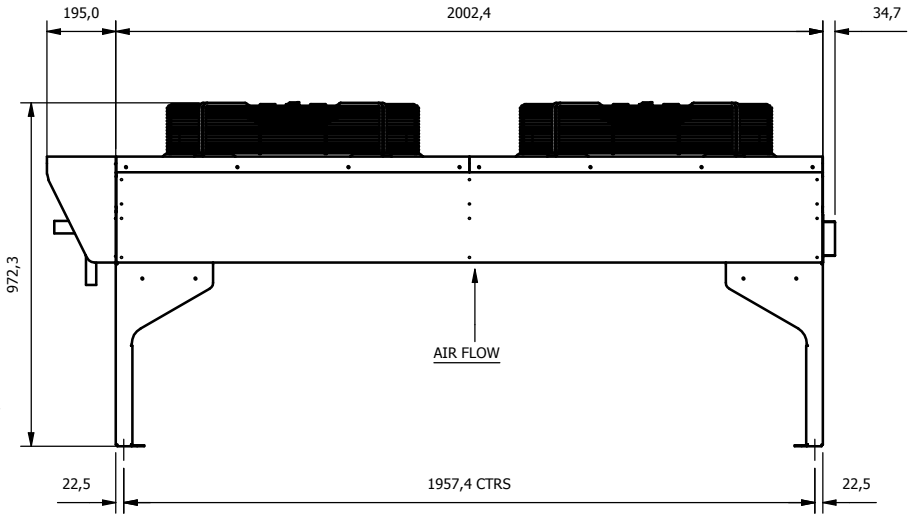

CAUTION ISOLATE UNIT FROM ELECTRICITY SUPPLY BEFORE UNDERTAKING ANY MAINTENANCE WORK
3 PHASE MOTOR - 400V-3Ph-50Hz
1 PHASE MOTOR - 230-1Ph-50Hz

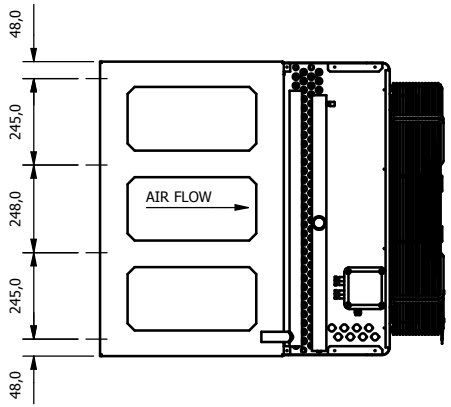

VERTICAL UNIT (WALL MOUNTED)

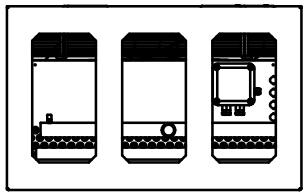

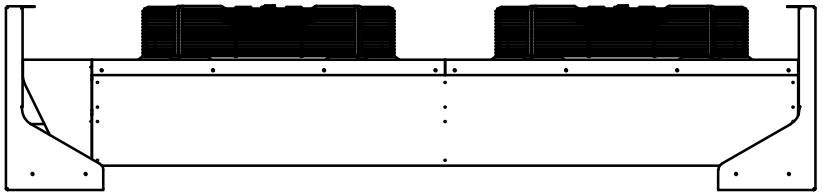

TRANSIT ASSY

ISSUE	MODIFICATION DETAILS	ECN No.	DATE	BY
1	First Issue For Production		05/03/2015	D_Phillips

REVISION HISTORY

Tolerances - Unless Otherwise Stated
Simple Assemblies (Max 3 Parts) ± 1,0mm
Complex Assemblies (Multiple Parts) ± 3,0mm

GEA Searle

© GEA Searle - All Rights Reserved
"This document is protected by copyright, and the design it contains is protected by both copyright & design right, of each rights being owned by GEA Searle Ltd. This document may also contain information which is confidential to that Company. Neither this document nor the design or information which it contains may therefore be used, sold, licensed, transferred, copied, hired, disclosed to any third party or otherwise be reproduced in whole or in part on any manner or form than with the prior written consent of that Company."

Job Id	Project No. / Customer: EP1273	Description: SALES OUTLINE RF-SJ102L4H	
Document Type: Final Assembly		Material: Multiple Parts - See BOM	
Created By: D_Phillips	Creation Date: 05/03/2015	Weight: N/A	Finish: RAL7032 - Pebble grey
Approved By: DJH	Approval Date: 05/03/2015	Part No. / 3D Model Ref: RF-SJ102L4H	Number of Sheets: 1 of 1
THIRD ANGLE PROJECTION	DO NOT SCALE IF IN DOUBT ASK	Drawing / File Ref: RF-SJ102L4H.dwg	A3 / Issue 1

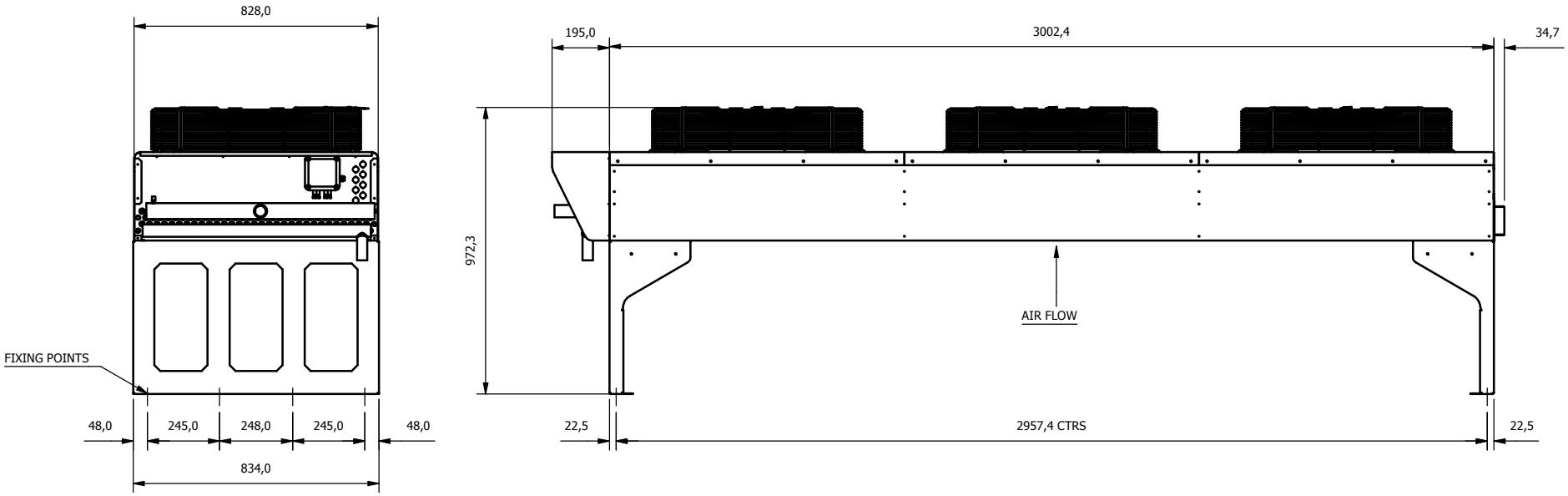

TRANSIT ASSY

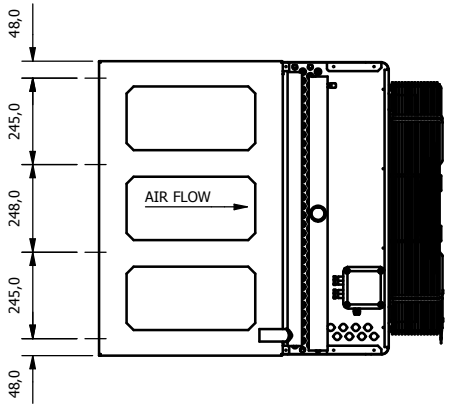

VERTICAL UNIT
(WALL MOUNTED)

ISSUE	MODIFICATION DETAILS	ECN No.	DATE	BY
1	First Issue For Production		05/03/2015	D_Phillips

REVISION HISTORY

Tolerances - Unless Otherwise Stated Simple Assemblies (Max 3 Parts) ± 1,0mm Complex Assemblies (Multiple Parts) ± 3,0mm	Job Id	Project No. / Customer: EP1273	Description: SALES OUTLINE RF-SJ103L4H	
	Document Type: Final Assembly		Material: Multiple Parts - See BOM	
GEA Searle	Created By: D_Phillips	Creation Date: 05/03/2015	Weight: N/A	Finish: RAL7032 - Pebble grey
	Approved By: DJH	Approval Date: 05/03/2015	Part No. / 3D Model Ref: RF-SJ103L4H	Number of Sheets: 1 of 1
	THIRD ANGLE PROJECTION	DO NOT SCALE IF IN DOUBT ASK	Drawing / File Ref: RF-SJ103L4H.dwg	A3 / Issue: 1

© GEA Searle - All Rights Reserved
"This document is protected by copyright, and the design it contains is protected by both copyright & design right, of each rights being owned by GEA Searle Ltd. This document may also contain information which is confidential to that Company. Neither this document nor the design or information which it contains may therefore be used, sold, licenced, transferred, copied, hot, disclosed to any third party or otherwise be reproduced in whole or in part an any manner or form than with the prior written consent of that Company."

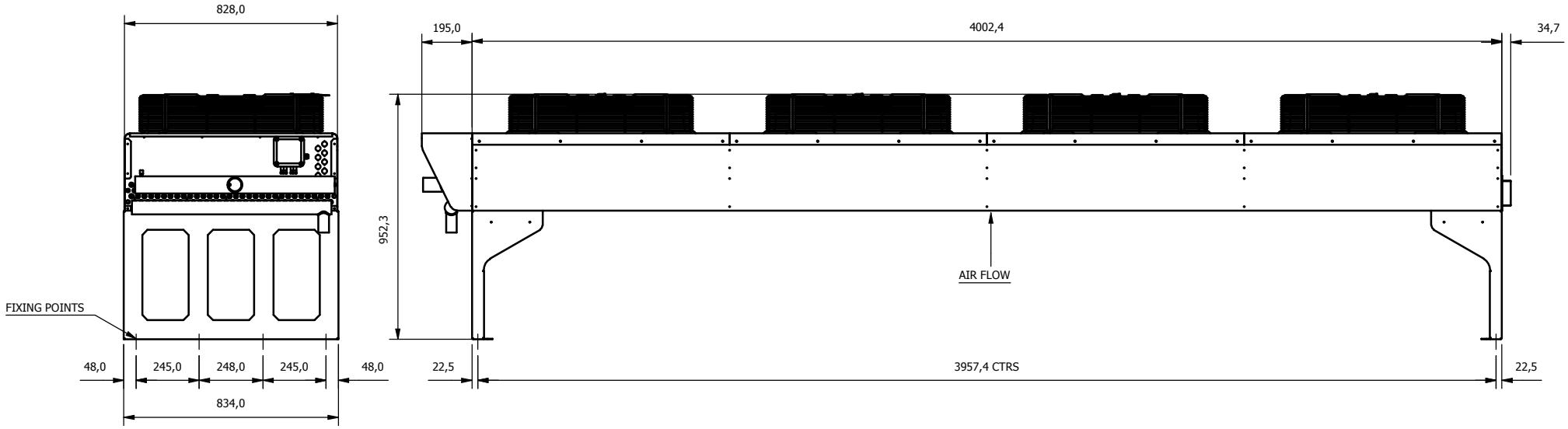

TRANSIT ASSY

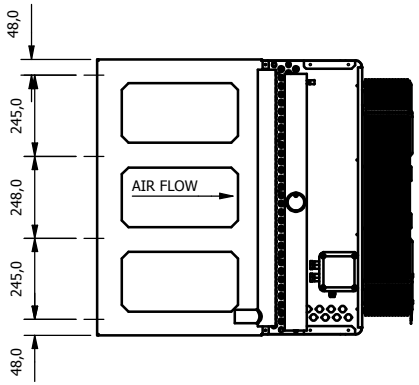

VERTICAL UNIT
(WALL MOUNTED)

ISSUE	MODIFICATION DETAILS	ECN No.	DATE	BY
1	First Issue For Production		10/03/2015	D_Phillips

REVISION HISTORY

Tolerances - Unless Otherwise Stated Simple Assemblies (Max 3 Parts) ± 1,0mm Complex Assemblies (Multiple Parts) ± 3,0mm	Job Id	Project No. / Customer: EP1273	Description: SALES OUTLINE RF-SJ104L4H	
	Document Type: Final Assembly		Material: Multiple Parts - See BOM	
GEA Searle	Created By: D_Phillips	Creation Date: 10/03/2015	Weight: N/A	Finish: RAL7032 - Pebble grey
	Approved By: DJH	Approval Date: 10/03/2015	Part No. / 3D Model Ref: RF-SJ104L4H	Number of Sheets: 1 of 1
	THIRD ANGLE PROJECTION	DO NOT SCALE IF IN DOUBT ASK	Drawing / File Ref: RF-SJ104L4H.dwg	A3 / Issue 1

© GEA Searle - All Rights Reserved
"This document is protected by copyright, and the design it contains is protected by both copyright & design right, all such rights being owned by GEA Searle Ltd. "The document may also contain information which is confidential to that Company. Neither this document nor the design or information which it contains may therefore be used, sold, licenced, transferred, copied, hired, disclosed to any third party or otherwise be reproduced in whole or in part on any manner or form than with the prior written consent of that Company."