Mounting Guide

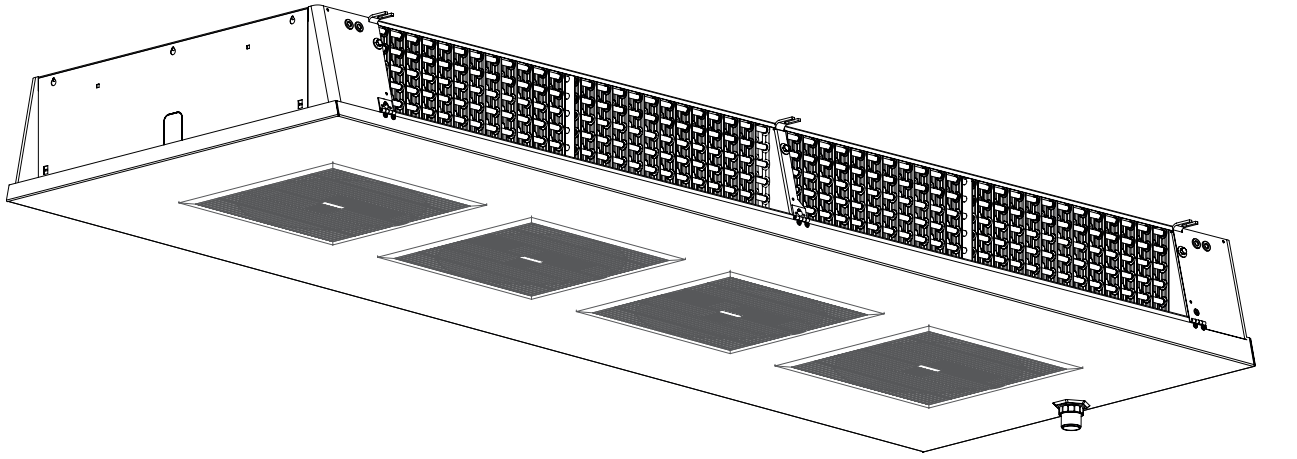

Küba *comfort* DP

Mounting Guide
Page 2-4

- Dimensions
- Weights
- Assembly

Electrical wiring
Page 5-9

- Motor wiring diagram
- Electrical defrosting wiring diagram
- Cabling

Dimensions

Weights

Type	H±5	W±5	D±5	L±5	F±3
DP	mm	mm	mm	mm	mm
031 C	281	972	1010	930	171
041 C	281	972	1010	930	171
–	–	–	–	–	–
–	–	–	–	–	–
–	–	–	–	–	–
032 C	288	1572	1010	930	171
042 C	288	1572	1010	930	171
–	–	–	–	–	–
–	–	–	–	–	–
–	–	–	–	–	–
033 C	296	2172	1010	930	171
043 C	296	2172	1010	930	171
–	–	–	–	–	–
–	–	–	–	–	–
–	–	–	–	–	–
034 C	303	2772	1010	930	171
044 C	303	2772	1010	930	171
–	–	–	–	–	–
–	–	–	–	–	–
–	–	–	–	–	–

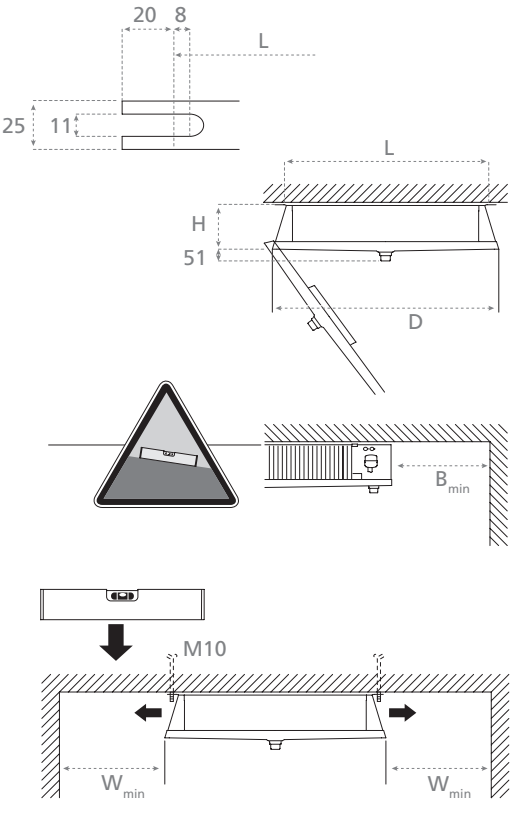

Type	E1±5	E2±5	B_{min}	W_{min}	Weight	
DP	mm	mm	mm	mm	kg	
					net	gross
031 C	630	–	800	1200	47	78
041 C	630	–	800	1200	49	80
–	–	–	–	–	–	–
–	–	–	–	–	–	–
–	–	–	–	–	–	–
032 C	1230	–	1400	1200	72	109
042 C	1230	–	1400	1200	76	113
–	–	–	–	–	–	–
–	–	–	–	–	–	–
–	–	–	–	–	–	–
033 C	1830	629	2000	1200	101	155
043 C	1830	629	2000	1200	107	161
–	–	–	–	–	–	–
–	–	–	–	–	–	–
–	–	–	–	–	–	–
034 C	2430	1229	2600	1200	126	188
044 C	2430	1229	2600	1200	134	194
–	–	–	–	–	–	–
–	–	–	–	–	–	–
–	–	–	–	–	–	–

Assembly

1

1.1

1.2

1.3

1.4

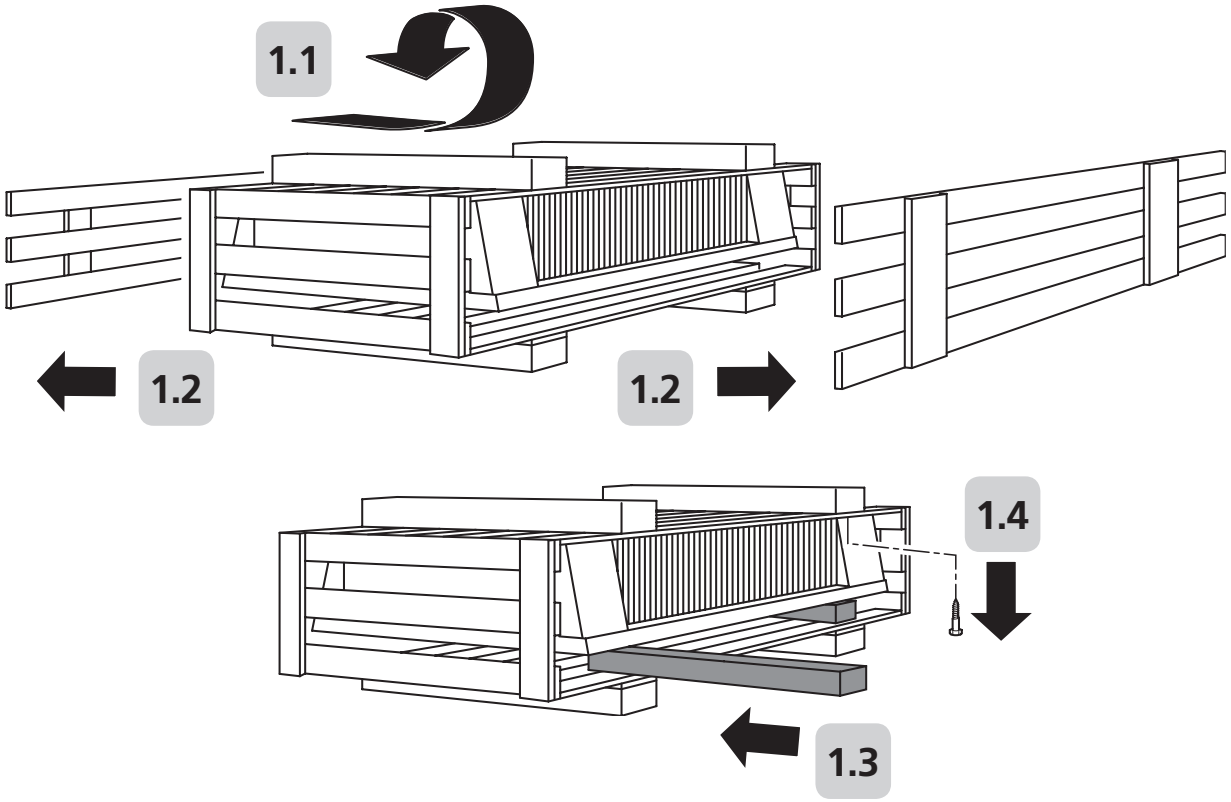

2

2.1

2.2

2.3

2.4

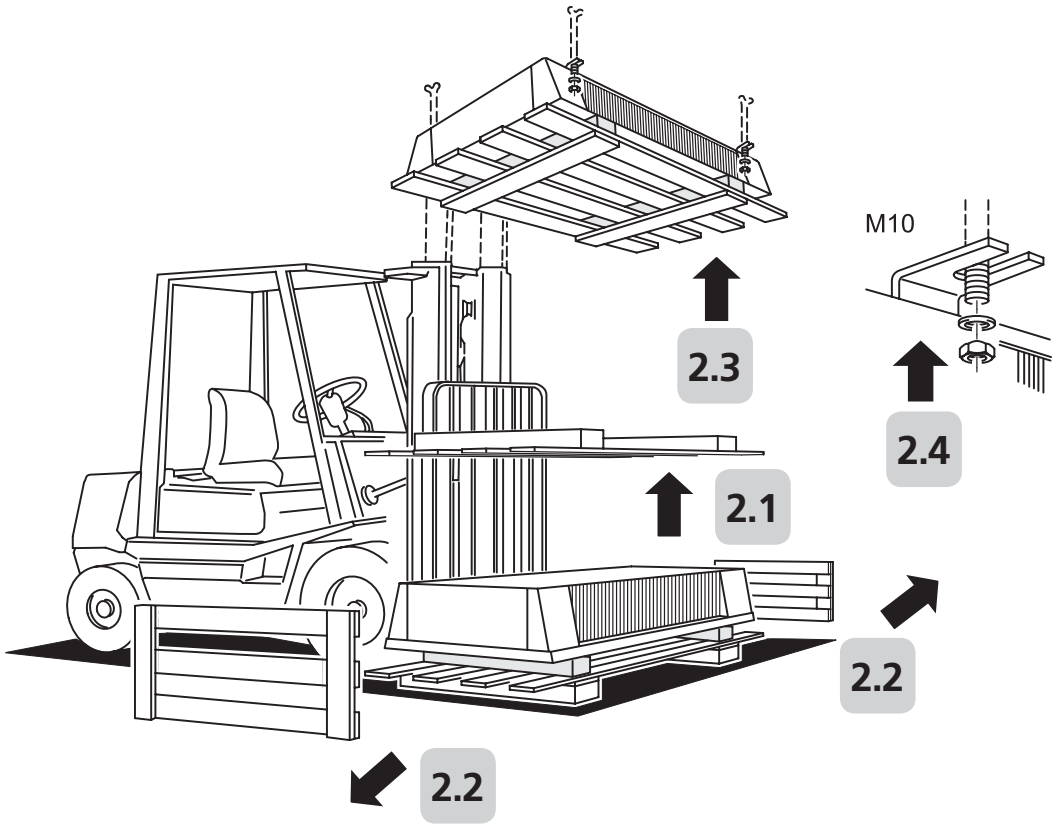

Assembly

3

3.1

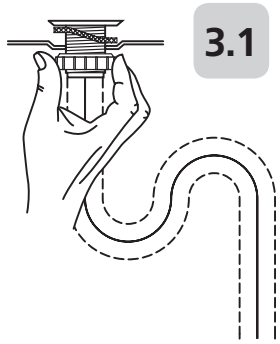

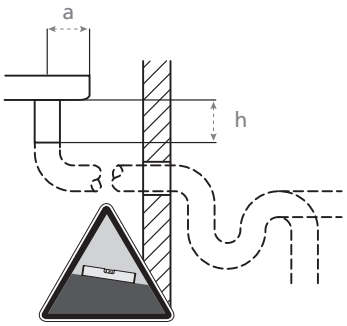

DP		a	h
		mm	mm
031 C - 044 C	1 x G 1¼	55	55

4

4.1

4.2

4.3

4.4

4.5

4.6

4.7

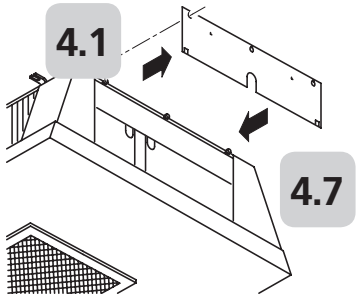

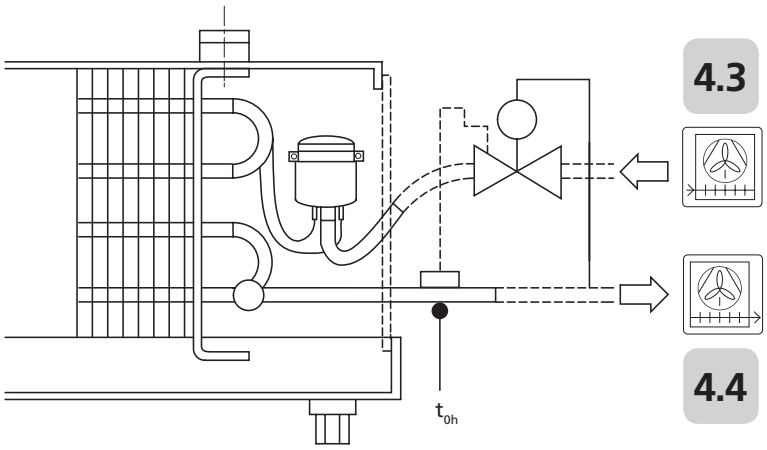

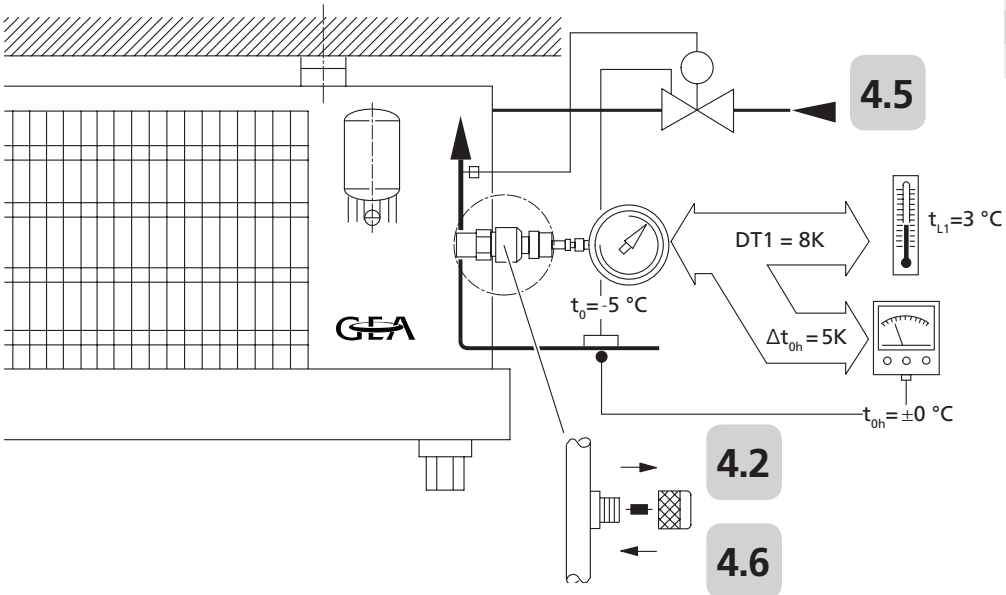

DP	ø mm	ø mm
031 C	10	22
032 C	10	22
033 C	10	28
034 C	10	28
041 C	10	28
042 C	15	35
043 C	15	35
044 C	22	35

$\Delta t_{0h} \cong 0.5 \ldots 0.7 \times DT1$

DT1 10K ≅ Δt_{0h} 6.1 K
DT1 9K ≅ Δt_{0h} 5.5 K
DT1 8K ≅ Δt_{0h} 4.9 K
DT1 7K ≅ Δt_{0h} 4.3 K
DT1 6K ≅ Δt_{0h} 3.7 K
DT1 5K ≅ Δt_{0h} 3.1 K
DT1 4K ≅ Δt_{0h} 2.5 K

Electrical wiring

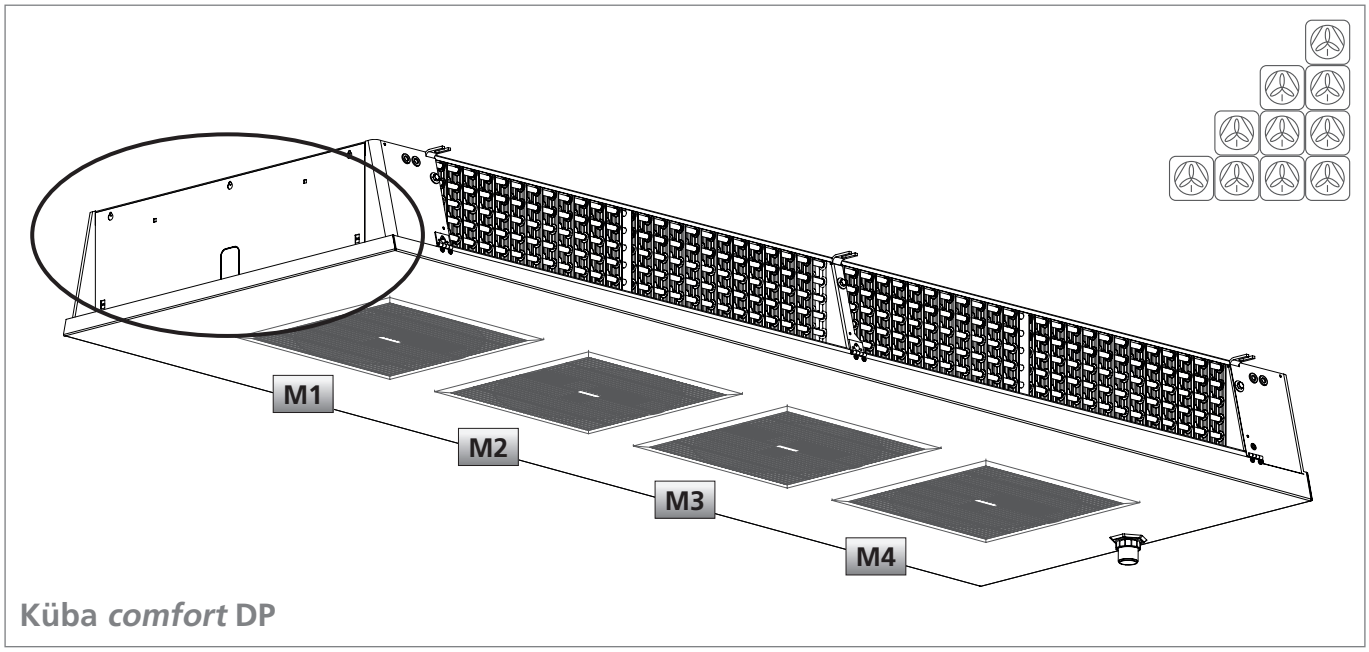

Küba *comfort* DP

Motor

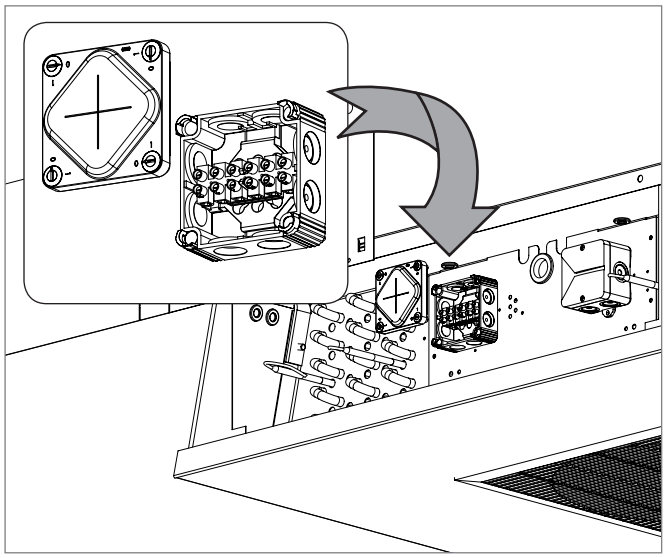

Electrical defrost

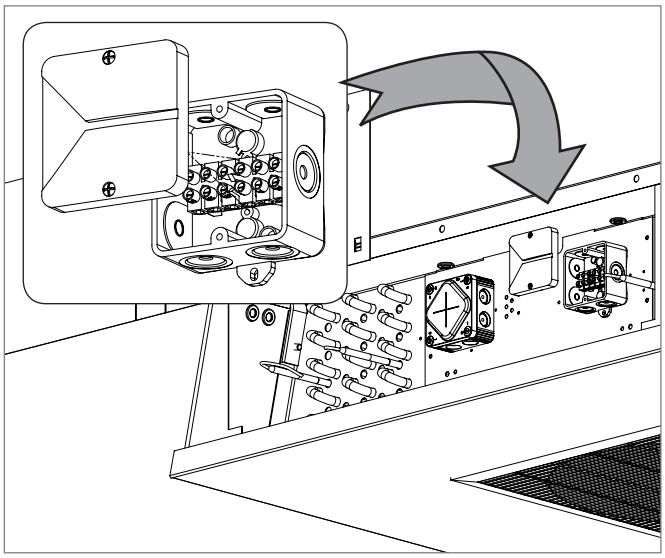

Motor wiring diagram

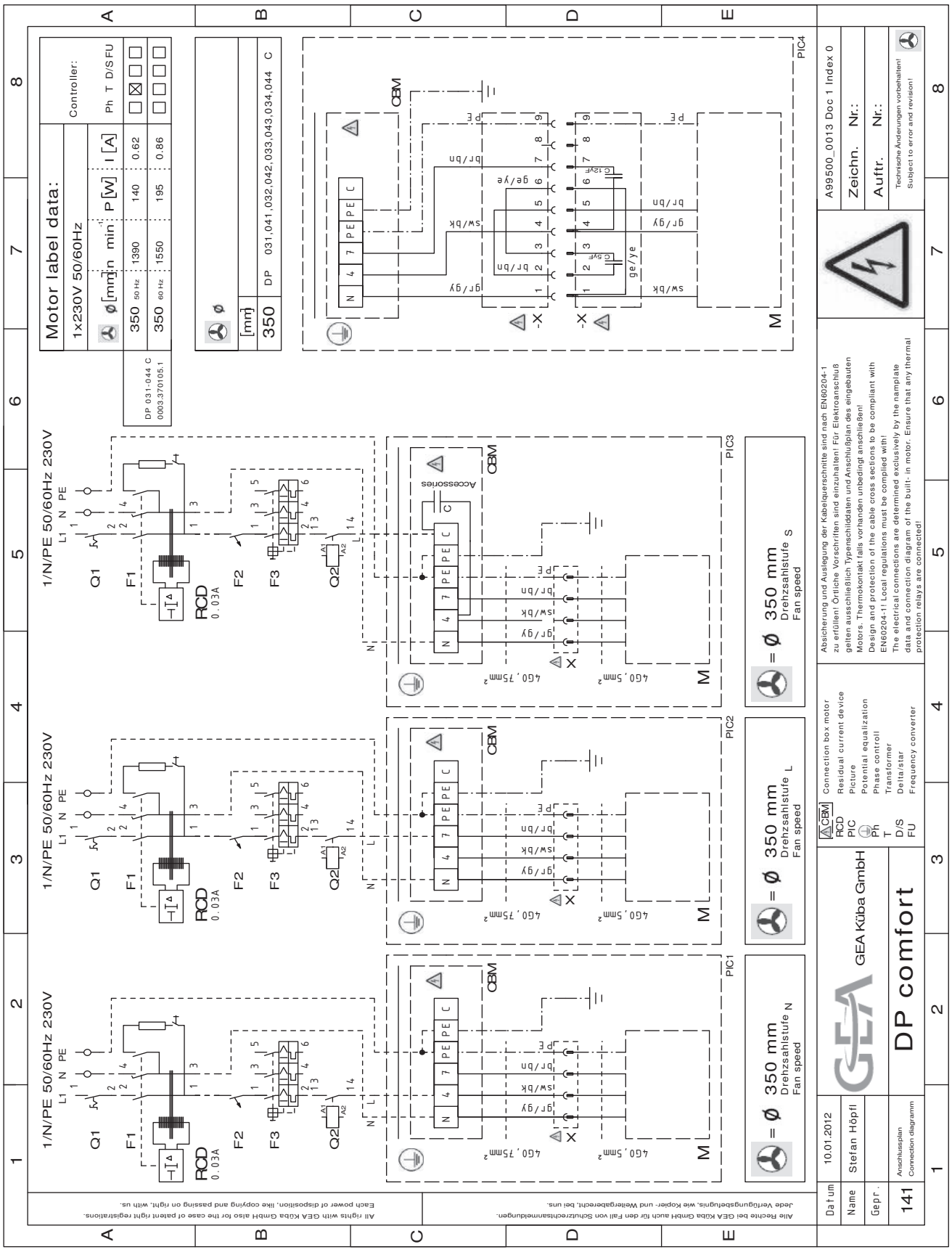

Electrical defrost wiring diagram

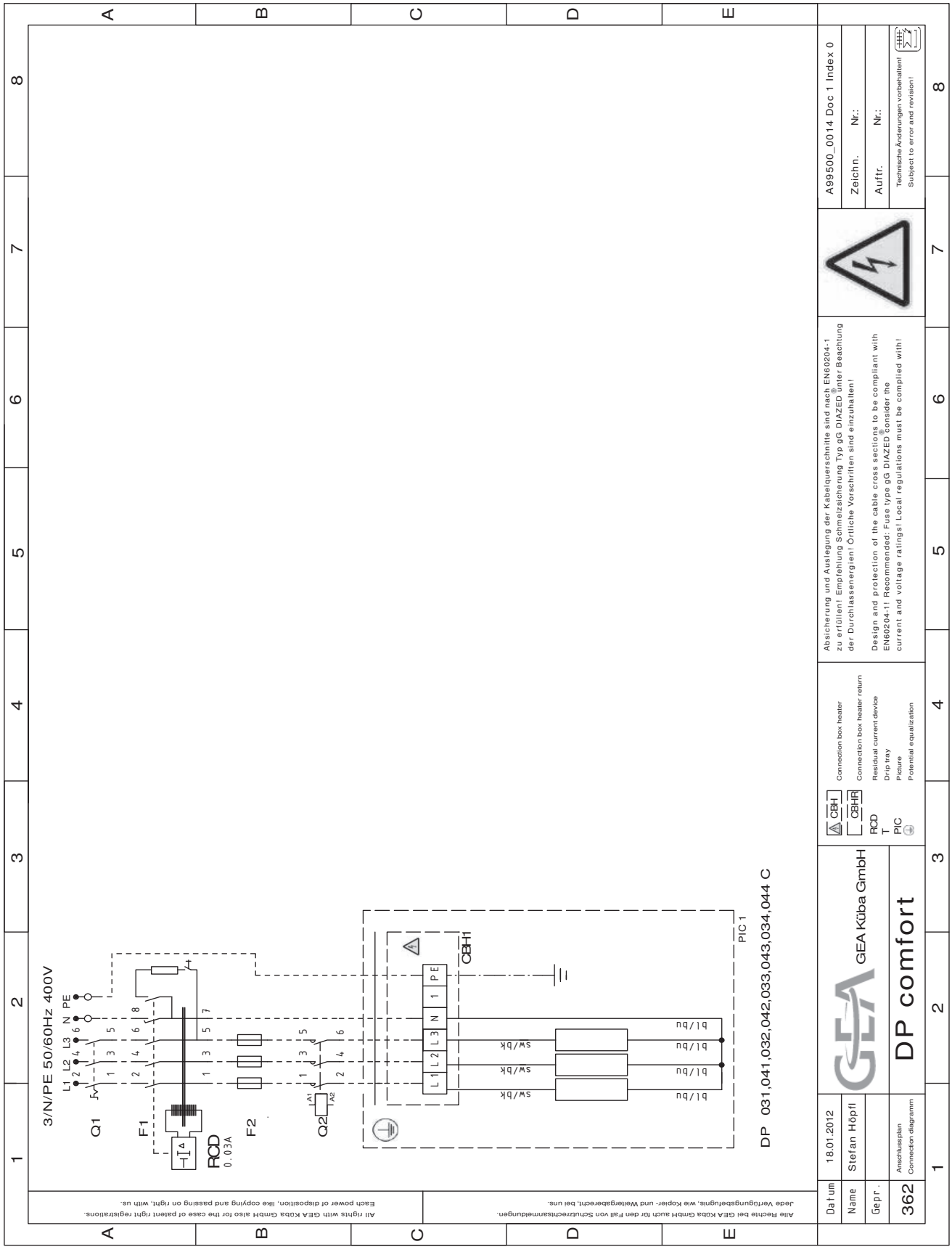

Cabling

DP.C *comfort*

Standard/Series

Wiring diagram number: A99500_0014 (Doc 2; Index 0)

Type		Coil heating bar (KÖ)				Drip tray heating bar (D)								**L1**		
DPAE.C DPBE.C	Finned length	Number	Length	Capacity P	Form	Number	Length	Capacity P	Form	Total capacity of all heating circuits	Total number of all heating circuits	Heating circuit no.	**PIC on the wiring diagram**	No. of heating element, coil KÖ	No. of heating element, drip tray D	No. of heating element, drip tray D (R)
Type	L [mm]	KÖ [pcs]	L [mm]	P [W]		TW [pcs]	L [mm]	P [W]		P [kW]	[pcs]	[Nb]		[pcs]	[pcs]	[pcs]
DPAE.C DPBE.C	Finned length	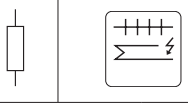														
031 C	600	4	1600	575	U114					2.3	1		1	2		
041 C	600	4	1600	575	U114					2.3	1		1	2		
032 C	1200	4	2800	1035	U114					4.1	1		1	2		
042 C	1200	4	2800	1035	U114					4.1	1		1	2		
033 C	1800	4	4000	1490	U114					6.0	1		1	2		
043 C	1800	4	4000	1490	U114					6.0	1		1	2		
034 C	2400	4	5200	1950	U114					7.8	1		1	2		
044 C	2400	4	5200	1950	U114					7.8	1		1	2		

	CBH connection box Heater Heating circuit												CBHR connection box Heater return Heating circuit return			
L2			L3													
No. of heating element, coil KÖ	No. of heating element, drip tray D	No. of heating element, drip tray D (R)	No. of heating element, coil KÖ	No. of heating element, drip tray D	No. of heating element, drip tray D (R)	Total capacity of heating circuit P	Current L1	Current L2	Current L3	Recom-mended cable cross-section for supply line (building-side)	SKS	Junction box conn. box with earthing cable	Heating circuit no.	Junction box connection box	Minimum cable cross-section for return	Cable length for parts list
[pcs]	[pcs]	[pcs]	[pcs]	[pcs]	[pcs]	P [kW]	I [A]	I [A]	I [A]	min [mm²]	[size]	CBH	[Nb]	CBHR	min [mm²]	[m]
														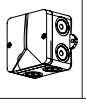		
1			1			2.3	5.0	2.5	2.5	2.50	3	ABO025				
1			1			2.3	5.0	2.5	2.5	2.50	3	ABO025				
1			1			4.1	9.0	4.5	4.5	2.50	3	ABO025				
1			1			4.1	9.0	4.5	4.5	2.50	3	ABO025				
1			1			6.0	13.0	6.5	6.5	2.50	3	ABO025				
1			1			6.0	13.0	6.5	6.5	2.50	3	ABO025				
1			1			7.8	17.0	8.5	8.5	2.50	3	ABO025				
1			1			7.8	17.0	8.5	8.5	2.50	3	ABO025				

GEA Küba GmbH

Kühler Weg 1 · 82065 Baierbrunn · Germany
Tel.: +49 89/744 73-0 · Fax: +49 89/744 73-107
kueba@gea.com · www.kueba.com

© Copyright 2013 GEA Küba GmbH · 0001.392265.1 · Status 10/2013
Technical modifications reserved