Searle NSQ NSE NCQ NCE NDQ SCQ

Installation and Maintenance Instructions ENGLISH

1. HEALTH AND SAFETY
This concerns the hazards, which may be encountered when installing and maintaining this equipment. It is therefore important that these instructions are followed.

Before installation
Ensure that:
a) the voltage, working fluid and the maximum working pressure stated on the product nameplate is suitable for the working environment.
b) the proposed method of mounting is adequate to support the total operational weight of the unit.

During installation and maintenance
Ensure that:
a) the unit is installed and maintained by qualified personnel only.
b) the electrical supply is isolated and secured from accidental re-connection.
c) the working area is adequately ventilated.
d) the temperature of coils with vinyl coated fins does not exceed 150°C (e.g. during brazing) as toxic fumes would be produced.

2. INSTALLATION
General
Upon receipt, the units should be visually inspected and the supplier notified (within seven days) of any damage or shortages. Units are not portable and are only for permanent installation. Electrical screw terminals in control panels and motor mountings should be checked for security.

Location
To ensure optimum performance, the condensing unit should be situated to give uniform air distribution across the coil. Obstructions to airflow should be minimised.
Coils should ideally be shaded from the sun.
Consideration should also be given to servicing requirements - there should be at least 600mm clearance on the right hand side of the units, and access panels must be clear of obstruction.

Floor/Roof Mounting
When Floor Mounted a gap of 250mm **must** be left between the rear of the unit and the nearest wall.
Fixing holes are provided in the feet for securing the condensing unit to a plinth. If the condensing unit is roof mounted, it is recommended that isolation material be used between the feet of the unit and the roof itself.

Guarding Cages
Floor mounted guard cages are available for individual units where additional protection to the installation may be required (contact your supplier for further details).

Pipework
Pipework to and from the unit should be selected to suit the application and not the connection size of the unit. It should be supported independently from the unit and in a way that prevents the transmission of vibration to the unit. A competent engineer should install refrigerant pipework to a high standard of refrigeration practice.

Electrical
Electrical components are located in an enclosure, situated on the front RH side of the unit and behind a lift-off service panel. Always ensure that the electrical supply to the unit is isolated before removing this panel. All electrical components are tested during the manufacturing process.

The electrical supply to the unit must be taken from a correctly sized (and motor rated) main circuit breaker or fuse box, corresponding to the current shown on the unit's nameplate.

Function of Controls
(Please refer to the relevant wiring diagram in Sect. 10)

a) Unit isolation - is situated behind a swivel plate cover on the main control box cover.
b) HP/LP - The HP switch is to prevent overpressure within the system. It should only operate under fault conditions. The LP switch is to prevent too low a pressure. Pressure switches should be set to the required operating limits during commissioning. Do not adjust these switches outside of the acceptable operating limits, (see section 4).
c) FSC - The fan speed controller is used to control the unit's head pressure under low ambient conditions. As the ambient temperature falls the fan speed is reduced to maintain head pressure.

Adjustment of FSC – Control Point (2 Fan Units)
The Fan Speed Controller is fitted on the rear port of the receiver outlet valve, and is factory set to maintain 39°C (17 barg R404A), if the desired Mid point differs from the factory setting it can be adjusted as follows:

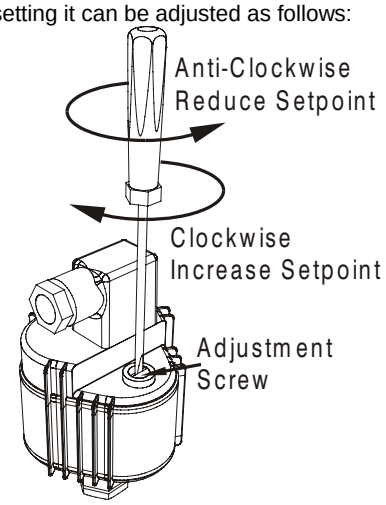

Adjustment of FSC – Control Point (4 Fan Units)
The Fan Speed Controller is fitted on the control panel RH side, and uses a pressure sensor module mounted on the rear port of the receiver outlet valve, and is factory set to maintain 36.5°C (15.5 barg R404A). If the operating pressure falls below this setpoint the fans will

stop. If the desired setting differs from the factory setting it can be adjusted as follows: (See diagram)
a. Remove sealing cap (3).
b. Insert enclosed 2mm allen key (2) into adjustment screw (1).
c. Turn allen key clockwise (+) to increase, or counterclockwise (-) to decrease pressure setting.
Do not turn adjustment screw more than 3 turns clockwise (+3).
1 turn causes a pressure change of approximately 2.6 bar.

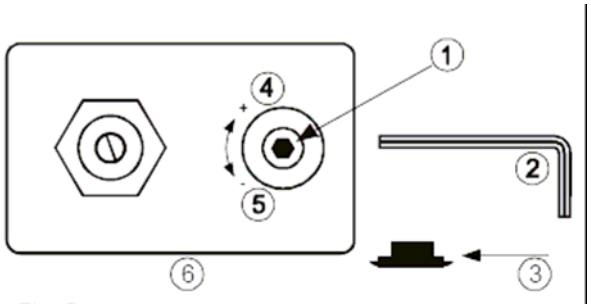

Adjustment of FSC - Control Point (Units with EC Fans)
Units fitted with EC fans, listed with electrical option 'E' in their part number use the Alco EC552 controller to monitor and control the head pressure.
The control set point can be adjusted by changing the parameter P0 in the condensing section of the controller, ensure the Fan LED "" is lit in the display to avoid accidental adjustment of the compressor set point. See section **F** for more information.

d) Compressor Manual Motor Starter/Overload – Each compressor is supplied via a MMS/Overload, which should be set to the maximum running current as shown on the compressor nameplate during commissioning. In the event of too high a current or phase loss occurring the MMS will trip out and stop the compressor, requiring a manual reset.

e) Compressor Contactor – Each compressor supply is switched via a contactor. The contactor is controlled via the Compressor Step Controller, and integrates the compressor safety chain of the HP/LP's and MMS/Overloads.

f) Optional Compressor Step Controller – Units with EC fans and electrical option 'E'. The starting and stopping of the compressors is controlled by an electronic controller (EC2). The controller monitors the suction pressure via a transducer and brings compressors in or out to maintain the suction pressure about the desired setting. Discharge pressure is also monitored but not used for control purposes unless EC fans are fitted.

To adjust the Suction Target Setpoint modify the 'P0' parameter in the compressor section of the controller, ensure the Compressors LED "" is lit in the display to avoid accidental adjustment of the condenser set point. See below for more information.

IMPORTANT : All EC2 controllers are fitted with a dedicated 24V transformer that is not earthed. The EC2 controllers must not be earthed. Do not fit any other electrical equipment to the EC2's transformer.

Suction Pressure Control EC2-552
2 control loops with the same suction pressure setpoint 'P0' modulate the compressors on and off.

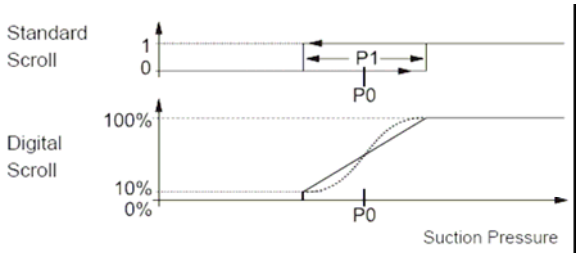

The dead band control loop with dead band 'P1' switches the single stage compressors on or off,

Connections to the controller as below, (See wiring diagrams for further info.)
EC2-552

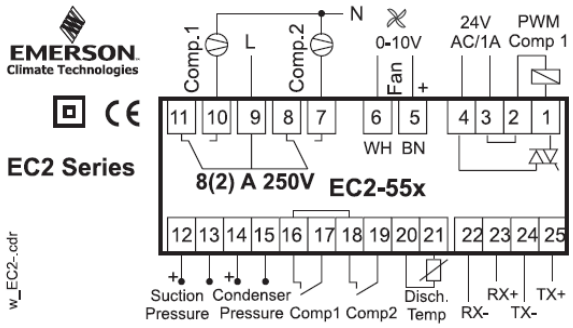

Set-up / Parameter Modification using the Keypad
The controller is factory set to maintain a suction pressure of 3.5 BarG on HT units, and 0.8 BarG on LT units, this can be modified during commissioning as described below.
WARNING: Do not set the controller outside of the application limits as shown in section 4.

The parameters can be accessed via the 4-button keypad. The configuration parameters are protected by a numerical password. The default password is "12".
Please refer to the parameters table on page 5
To select the parameter configuration:

1. Press the Prg button for more than 5 seconds
2. A flashing 0 is displayed
3. Press or until 12 is displayed; (password)
4. Press Sel to confirm password
5. The first modifiable parameter code is displayed (/1).
6. Press or to show the code of the parameter that has to be changed;
7. Press Sel to display the selected parameter value;
8. Press or to increase or decrease the value;
9. Press Sel to temporarily confirm the new value and display its code.
10. Repeat the procedure from point 6 to modify any other parameters.
11. Press Prg to confirm the new values and exit the parameters modification procedure.

Temporary Display Of Data:
It is possible to temporarily display the values of the different sensors. This is a useful feature when initially setting-up the system without the aid of the WebPages.
Press the Sel sequentially. The value displayed on the screen corresponds to the number corresponding to the

/1 parameter. (Action only valid when parameter H2 = 3)

Special Functions:
The Special Functions can be activated by:

1. Press and together for more than 5 seconds. A flashing 0 is displayed.
2. Press or until the password is displayed (default = 12). If password was changed, select the new password.
3. Press Sel to confirm password , A 0 is displayed and the Special Function mode is activated.
4. Press or to select the function. The number of special functions is dynamic and controller dependent. See list below.
5. Press Sel to activate the function without leaving the special function mode.
6. Press Prg to activate the function and leave the special function mode.

Most of the Special Functions work in a toggle mode, the first call activates the function, and the second call deactivates the function.
The indication of the function can only be displayed after exiting the special function mode.

- 0: Display test function
- 1: Displays the current TCP/IP address
- 2: Set the controller TCP/IP address to the default value: 192.168.1.101
- 3: Resets all parameters to the factory default setting. The controller will indicate “oF” during the reset.

The data to be shown on the display can be selected by the user. In case of an alarm, the alarm code is displayed alternately with the selected data. The user can inhibit the alarm code. Press the Sel button to scroll through all possible displayable data.
The display will show for one second the numerical identifier of the data and then the selected data. After two minutes the display will return to the by parameter /1 selected data.

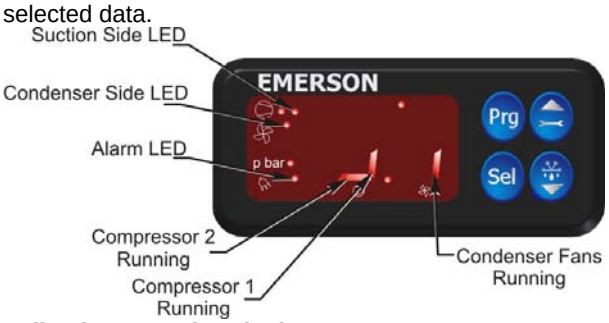

Indications On The Display:
Compressor Controller

- State
- Alarm in combination with alarm message and alarm LED
- Suction pressure or saturation temperature from suction pressure
- Parameter

Other display

- Pressure: Pressure value in bar (g)
- Alarm: Alarm condition
- IR: IR communication enabled

Alarm Codes
‘HP’ High pressure alarm
Controller 1: suction pressure higher than the maximum limit
Controller 2: condensing pressure higher than the maximum limit (Not Applicable).
‘lP’ Low pressure alarm
Controller 1: suction pressure lower than the minimum limit
Controller 2: condensing pressure lower than the minimum limit
‘d1’ Discharge temperature alarm
Digital scroll only: Discharge end temperature is too high
‘EP’ Error pressure
Controller 1: suction pressure sensor failure
Controller 2: condensing pressure sensor failure (N/A)
‘Fr’ Fast recovery alarm
Controller 1: fast recovery from low suction pressure
Controller 2: fast recovery from low condensing pressure (N/A)
‘hr' High discharge pressure alarm
Controller 1: high discharge pressure recovery
Controller 2: high discharge pressure recovery (N/A)
‘rE’ Emergency run
Controller 1: runs with c6 numbers of compressors
Controller 2: runs with c6 numbers of fans (N/A)
‘E1’ Feedback alarm 1
Controller 1: digital input associated with compressor 1 has changed into alarm state (safety chain)
Controller 2: digital input associated with fan(s) has changed into alarm state (safety chain) (N/A)
‘E2’ Feedback alarm 2
Controller 1: digital input associated with compressor 2 has changed into alarm state (safety chain) (N/A)
‘n1’ Service alarm 1
Controller 1: compressor 1 operating time higher than run limit (A9)
Controller 2: fan operating time higher than run limit (A9) (N/A)
‘n2’ Service alarm 2
Controller 1: compressor 2 operating time higher than run limit (A9)
Er Data error
Data send to the display is out of range
Messages
‘---‘ No data to display
The display will show an “---” at node start up and when no data is send to the display.
‘In’ Reset to default values activated
The display will show an “In” when the factory default configuration data set
is initialized.
‘Id’ Wink request received
The display will show a flashing “Id” when the wink request was received. The flashing “Id” will be shown on the display until the service button will be pressed, or a 30 min delay timer will expire or a second wink request is received. This function is action only when using SNMP protocol. The node is offline and no application is running. This is the result of a network management command and will happen for example during node installation.

WARNING: Do not set the controller outside of the application limits as shown in section 4.

For a full description of controller settings please refer to the table on page 8.

g) Anti-Cycle & Delay Start Timer – Standard on NSQ/NCQ, optional on NSE NCE, with electrical options W & T.
Anti-Cycle Function
Units are fitted with a compressor Anti-Cycle and Delay Start timer. This timer will prevent rapid repeated starting of the compressor, by enforcing a maximum of 10 compressor starts per hour. The timer runs from Start to Start, therefore if the compressor has run for more than 6 minutes it will be allowed to start again

immediately, however if the compressor has run for less than 6 minutes it will be prevented from starting for the remainder, i.e. if run for 4 minutes, there will be a 2 minute delay on the next start. This is non adjustable.

Delay on Power Up start Function

The timer also has an adjustable delay for start up after a mains power failure. This function may be used to give a set delay before the compressor starts, and can be set differently on multiple units to prevent an over current on the mains supply, and possible tripping of the mains breaker.

To adjust the delay see the diagrams below.

The modules have indicator LED's which illuminate when the delay timer is active.

Units with Combined Alarm Relay and Anti Cycle

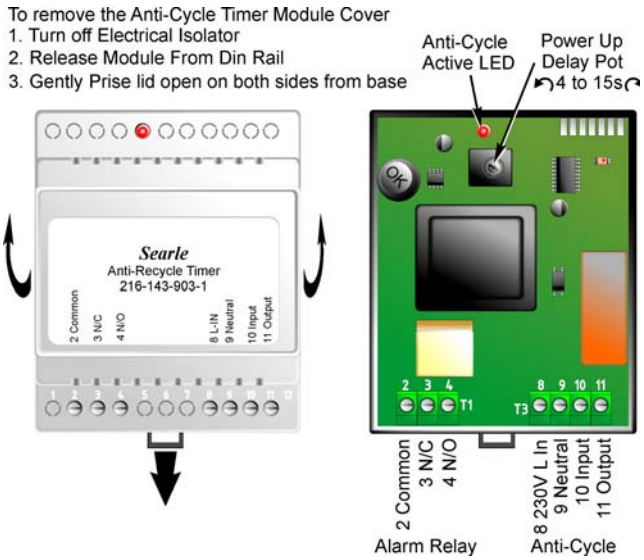

Units with separate Anti-Cycle / Alarm Module

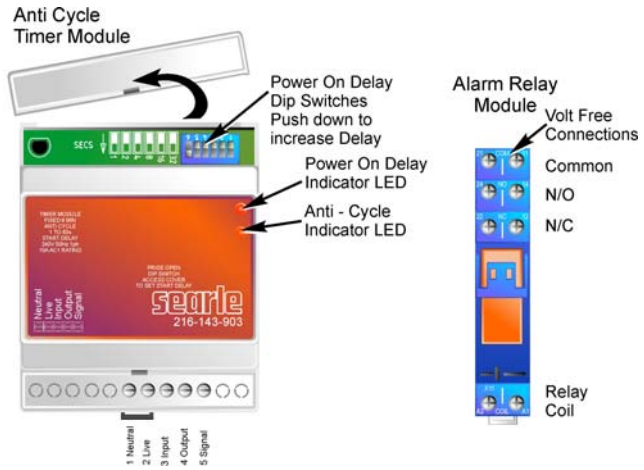

h) Volt Free Alarm Relay – Standard on NSQ/NCQ, optional on NSE NCE, with electrical options W, T & E.

Units are fitted with a volt free relay, either mounted on a separate din rail, or integrated in the Anti-Cycle timer, (see section 'g'). The relay will energise when 'Healthy' and will de-energise on the following faults :-

Mains Power Loss, HP Trip, Compressor Overload Trip.

The relay is a changeover type with volt free terminals for Normally Open, Normally Closed and Common connections. Any customer connection to these terminals must not exceed a load of 8A resistive (AC1) at 230V.

'L' version units only

i) DTC - 'LX/S' models use ZF scroll compressors.

ZF model compressors require liquid injection to keep discharge temperatures within safe limits. The compressor is equipped with a sensor bulb, which is installed, in the top cap of the compressor. The bulb senses discharge temperature and enables controlled liquid injection as temperature rises above the factory set point. The valve is connected with a flexible hose to the liquid line via a schraeder connection.

j) Klixon - discharge temperature protector, switches the compressor off if the discharge temperature exceeds a pre-set maximum (auto re-set).

k) EVI Vapour Injection Solenoids – 'LV' models only.

Units are fitted with a Plate Heat Exchanger to super sub cool the liquid from the condenser, and provide vapour injection to the compressors. A solenoid valve on each compressor vapour injection port is slaved to the compressor contactors and operates when the compressor runs.

All units

l) Pressure Relief Valve - fitted in the side of the liquid receiver. If the unit is not located externally in open air the relief valve outlet must be piped away to open air.

Regular maintenance is required see section **6.**

Maintenance *Every 3-6 Months.*

3. EVACUATION AND CHARGING

Before operating the unit for the first time, check that all guards, motors, mountings and electrical covers are secure, and that fans rotate freely. The unit has been leak tested, dehydrated and filled with a holding charge of "dry air" during manufacture.

The entire system should be evacuated prior to charging as follows:

- The right hand panel should be removed to provide access to the compressor shut off valves with service ports.
- Connect a vacuum pump to the 1/4" flare connections on each compressor shut-off valve.
- These valves will be in a fully back-seated position in the unit as supplied. The valve spindles should be screwed in a few turns to open up the ports.
- Evacuate the system to below 225 microns (0.3mbar). The pump should be isolated and system pressure monitored. A rapid continuous rise would indicate a leak in the system.
- During the evacuation process, the crankcase heater should be switched on.

Note: To ensure that compressor is not operated during evacuation, the compressor overloads / manual motor starters must be in the off position.

DO NOT START THE COMPRESSOR UNDER VACUUM. NEVER RUN COMPRESSOR IF CONTAINING AIR .

The unit should be charged with the specified refrigerant (N2CQ 'L' Units R404A, 'N2CQ M' Units R404A/R407C/R134A), until the sight glass is just clear at the normal operating condition. If after charging the unit is left with the power supply turned off, turn on the power supply for a minimum period of three hours before the unit is switched on. This will ensure that the compressor sump is warm and free from liquid refrigerant.

IMPORTANT

N2CQ Scroll compressors, like several other types of compressor, will only compress in one rotational direction. Three-phase compressors will rotate in either direction, depending upon phasing of the power to T1, T2 and T3. Since there is a possibility of connecting power in such a way as to cause rotation in the reverse direction, it is important to check this. Verification of rotation direction can be made by observing that suction pressure drops and discharge pressure rises when the compressor is energised. Reverse rotation results in a sound level above that of the correct rotation direction, as well as a substantially reduced current draw.

Oil Charge
The compressors are pre charged with Polyolester oil. Following initial start-up, some of this oil will migrate to other areas of the system. Ensure the oil charge in the system is adequate as follows :-

- N2CQ ‘M’ models utilise an oil balance line between compressors, ensure the oil balance line sightglass level is 1/2 full when the compressors are not running.
- N2CQ ‘L’ models are fitted with a separator reservoir, ensure the oil charge is adequate to show in the upper sight glass when the compressors are not running.

Note: on N2CQ ‘M’ models with oil balance lines, the oil level may show as empty when only one compressor is running, this is normal. The true oil level will show when both compressors are running, or both are at rest.
Only suitable Polyolester oil, such as Mobil EAL Arctic 22 CC (or equivalent), should be used.

4. OPERATING LIMITS
The HP/LP switch must be set to prevent the unit from operating outside of its application limits.
The LP switch and Step Controller must not be set any lower than the figures below:

R404A & R407C

Unit Range	Minimum SST °C R404A R407C	LP Cut out BarG R404A	LP Cut out BarG R407C	Maximum HP Cut out BarG R404A R407C
NS/NC-'MX/S'	-20	2	1.7	25.2
NS/NC-'LX/S/V'	-40	0.35	N/A	25.2
SCQ 'M'	-15	2.7	N/A	25.2
SCQ 'LX'	-35	0.7	N/A	25.2

R134A

Unit Range	Minimum SST °C R134a	LP Cut out BarG R134a	Maximum HP Cut out BarG R134a
'MX/S'	-20	0.37	14.4
'LX/S/V'	-20	0.37	14.4
SCQ	Not Suitable for use with R134a		

The LP differential setting must be set high enough to prevent short cycling of the unit.
The LP Cut-Out pressure is the LP range setting minus the LP differential setting.

The HP switch must be set at 0.9 x the PRV setting for all refrigerants. As standard units are fitted with a PRV set to 27.6 BarG, the HP switch **must not** be set higher than 25.2 BarG.
For R134a refrigerant a lower pressure 16 BarG PRV is available, part number 200-200-528, the HP switch **must not** be set any higher than 14.4 BarG.

Multiple Evaporator Applications
If the condensing unit is connected to multiple evaporators operating independently of one another, it is essential that the saturated suction temperature remains within the operating limits when the minimum number of evaporators are running.
If the saturated suction temperature falls close to or below the operating limits for medium temperature 'M' units when the minimum number of evaporators are running, the use of 'L' units, or other Searle condensing unit products should be considered.

5. MAINTENANCE

WARNING! THE UNIT MUST BE ELECTRICALLY ISOLATED BEFORE MAINTENANCE WORK IS UNDERTAKEN

The following routine maintenance is required:
Every 3-6 months
The condenser should be cleaned with a soft brush to ensure correct operation of the condensing unit. When the condenser coil is obstructed by dirt or rubbish, the unit will experience high condensing temperatures which will result in higher running costs, loss of compressor efficiency and ultimately overheating of the compressor and/or condenser fans.
The pressure relief valve should be inspected for any pressure release. If a release has occurred or there is a requirement by the customer maintenance schedule the relief valve should be changed.

The PRV MUST be changed every 5 years.

Every 12 months
Check security of fixings, especially the fan and motor mounting. Check refrigerant pipeline for damage and leaks. Check motor (fans should rotate freely).
Check torque settings of compressor rotalock valves (see table below).

When necessary
Clean the fins, guard and general casework. Care must be taken when cleaning the fins to prevent damage. It is recommended that a soft brush and mild detergent solution be used.
High-pressure spray washing of the unit must not be undertaken, as damage to fin coatings and components will occur. Low-pressure spray washing using specialist coil cleaning solutions is recommended.

WARNING! SAFETY GOGGLES MUST BE WORN DURING THIS OPERATION.

6. INVALIDATION OF GUARANTEE
Searle accepts no liability, according to Searle's terms and conditions of sale, for loss or damage arising as a result of:
(i) Failure to install, set up or put to work any part of equipment in the manner specified in the I&M instructions, or
(ii) Failure to maintain the equipment in the manner specified in the I&M instructions, or
(iii) Replacement parts, additional parts or accessories supplied by persons other than Searle having been incorporated into, or attached to the equipment, or
(iv) The equipment having been adapted for use, operated or used in such a way as does not conform to Searle's recommendations.

7. Compressor Rotalock Valve Torques

Unit	Discharge		Suction	
	Size	Torque	Size	Torque
SCQ7L & 8L SCQ13M to 27M	N/A	N/A	1" x 14	60 -70 Nm
SCQ9L & 14L SCQ31M	1" x 14	60 - 70 Nm	1" x 14	60 - 70 Nm
NSQ09L to 18L NSQ15M to 45M	1" x 14	60 – 70 Nm	1 1/4" x 12	90 – 100 Nm
NSQ24L to 40L NSQ56M to 92M	1 1/4" x 12	90 – 100 Nm	1 3/4" x 12	100 – 120 Nm
NSQ48L NSQ110M	1 3/4" x 12	100 – 120 Nm	2 1/4" x 12	140 – 145 Nm

Check compressor rotalocks as described in the maintenance section ‘Every 12 months’ (p4).
Note: connection sizes are the threaded spud connection

8. REFRIGERATION COMPONENTS LIST NSQ / NCQ / NDQ / NSE / NCE (Searle Part Numbers)

Unit Model	Compressor	Filter Drier Sight Glass	Fan Sets	Oil Separator	PRV (27.6 Bar)	Receiver	Rotalok
SCQ13-1MX-A	200-100-100	200-452-116	44-906-A360-4	N/A	200-563-040	200-616-033	N/A
SCQ18-1MX-A	200-100-101	200-452-116	44-906-A360-4	N/A	200-563-040	200-616-033	N/A
SCQ27-1MX-A	200-100-102	200-452-116	44-906-A360-4	N/A	200-563-040	200-616-033	N/A
SCQ31-1MX-A	200-100-103	200-452-116	44-906-A360-4	N/A	200-563-040	200-616-033	N/A
SCQ7-1LX-A	200-100-104	200-452-116	44-906-A360-4	N/A	200-563-040	200-616-033	N/A
SCQ8-1LX-A	200-100-105	200-452-116	44-906-A360-4	N/A	200-563-040	200-616-033	N/A
SCQ9-3LX-A	200-100-106	200-452-116	44-906-A360-4	N/A	200-563-040	200-616-033	N/A
SCQ14-3LX-A	200-100-107	200-452-116	44-906-A360-4	N/A	200-563-040	200-616-033	N/A
NSQ15-3MX-A	200-200-131 (3ph) 200-200-132 (1ph)	200-452-117	231-940-106	200-200-409	200-563-040	200-616-034	200-200-610
NSQ19-3MX-A	200-200-133 (3ph) 200-200-134 (1ph)	200-452-117	231-940-106	200-200-409	200-563-040	200-616-034	200-200-610
NSQ21-3MX-B	200-200-135 (3ph) 200-200-136 (1ph)	200-452-118	231-9045-0621	200-200-409	200-563-040	200-616-034	200-200-610
NSQ26-3MX-C	200-200-137 (3ph) 200-200-137 (1ph)	200-452-118	231-940-106	200-200-409	200-563-040	200-616-034	200-200-610
NSQ30-3MX-C	200-200-139	200-452-118	231-940-106	200-200-409	200-563-040	200-616-034	200-200-610
N**D**Q30-3MX-C	200-200-163	200-452-118	231-940-106	200-200-409	200-563-040	200-616-034	200-200-610
NSQ38-3MX-C	200-200-140	200-452-118	231-940-106	200-200-409	200-563-040	200-616-034	200-200-610
NSQ45-3MX-C	200-200-141	200-452-118	231-940-106	200-200-409	200-563-040	200-616-034	200-200-610
N**D**Q45-3MX-C	200-200-165	200-452-118	231-940-106	200-200-409	200-563-040	200-616-034	200-200-610
NCQ56-3MX-D	200-200-142	200-452-119	231-9045-0621	200-200-415	200-563-040	200-616-039	200-200-613
NCQ56-3MX-E	200-200-142	200-452-114	231-9045-0621	200-200-415	200-563-040	200-616-039	200-200-613
NCQ75-3MX-E	200-200-143	200-452-114	231-9045-0621	200-200-415	200-563-040	200-616-039	200-200-613
NCQ92-3MX-E	200-200-144	200-452-114	231-9045-0621	200-200-415	200-563-040	200-616-039	200-200-613
NCQ110-3MX-E	200-200-145	200-452-114	231-9045-0621	200-200-417	200-563-040	200-616-039	200-200-614
NSQ9-3LX-A	200-200-001	200-452-117	231-940-106	200-200-409	200-563-040	200-616-034	200-200-610
NSQ11-3LX-A	200-200-002	200-452-117	231-940-106	200-200-409	200-563-040	200-616-034	200-200-610
NSQ13-3LX-A	200-200-003	200-452-117	231-940-106	200-200-409	200-563-040	200-616-034	200-200-610
NSQ13-3L**V**-C	200-200-173	200-452-118	231-940-106	200-200-409	200-563-040	200-616-034	200-200-610
NSQ15-3LX-A	200-200-004	200-452-117	231-940-106	200-200-409	200-563-040	200-616-034	200-200-610
NSQ18-3LX-C	200-200-005	200-452-118	231-940-106	200-200-409	200-563-040	200-616-034	200-200-610
NSQ18-3L**V**-C	200-200-175	200-452-118	231-940-106	200-200-409	200-563-040	200-616-034	200-200-610
N**D**Q18-3L**V**-C	200-200-180	200-452-118	231-940-106	200-200-409	200-563-040	200-616-034	200-200-610
NCQ24-3LX-D	200-200-640	200-452-119	231-9045-0621	200-200-415	200-563-040	200-616-039	200-200-613
NCQ24-3L**V**-D	200-200-	200-452-119	231-9045-0621	200-200-415	200-563-040	200-616-039	200-200-613
NCQ33-3LX-D	200-200-641	200-452-119	231-9045-0621	200-200-415	200-563-040	200-616-039	200-200-613
NCQ33-3L**V**-E	200-200-	200-452-114	231-9045-0621	200-200-415	200-563-040	200-616-039	200-200-613
NCQ40-3LX-D	200-200-642	200-452-119	231-9045-0621	200-200-415	200-563-040	200-616-039	200-200-613
NCQ40-3L**V**-E	200-200-	200-452-114	231-9045-0621	200-200-415	200-563-040	200-616-039	200-200-613
NCQ48-3LX-D	200-200-645	200-452-119	231-9045-0621	200-200-417	200-563-040	200-616-039	200-200-614
NCQ48-3L**V**-E	200-200-	200-452-114	231-9045-0621	200-200-417	200-563-040	200-616-039	200-200-614
NSE15-3MX-A	200-200-131 (3ph) 200-200-132 (1ph)	200-452-117	231-9040-0421	200-200-409	200-563-040	200-616-034	200-200-610
NSE19-3MX-A	200-200-133 (3ph) 200-200-134 (1ph)	200-452-117	231-9040-0421	200-200-409	200-563-040	200-616-034	200-200-610
NSE21-3MX-A	200-200-135 (3ph) 200-200-136 (1ph)	200-452-117	231-9040-0421	200-200-409	200-563-040	200-616-034	200-200-610
NSE26-3MX-B	200-200-137 (3ph) 200-200-137 (1ph)	200-452-118	231-9045-0421	200-200-409	200-563-040	200-616-034	200-200-610
NSE30-3MX-B	200-200-139	200-452-118	231-9045-0421	200-200-409	200-563-040	200-616-034	200-200-610
NSE38-3MX-B	200-200-140	200-452-118	231-9045-0421	200-200-409	200-563-040	200-616-034	200-200-610
NSE45-3MX-B	200-200-141	200-452-118	231-9045-0421	200-200-409	200-563-040	200-616-034	200-200-610
NCE56-3MX-D	200-200-142	200-452-119	231-9045-0421	200-200-415	200-563-040	200-616-039	200-200-613
NCE75-3MX-D	200-200-143	200-452-119	231-9045-0421	200-200-415	200-563-040	200-616-039	200-200-613
NCE92-3MX-E	200-200-144	200-452-114	231-9045-0421	200-200-415	200-563-040	200-616-039	200-200-613
NCE110-3MX-E	200-200-145	200-452-114	231-9045-0421	200-200-417	200-563-040	200-616-039	200-200-614
NSE9-3LX-A	200-200-001	200-452-117	231-9040-0421	200-200-409	200-563-040	200-616-034	200-200-610
NSE11-3LX-A	200-200-002	200-452-117	231-9040-0421	200-200-409	200-563-040	200-616-034	200-200-610
NSE13-3LX-A	200-200-003	200-452-117	231-9040-0421	200-200-409	200-563-040	200-616-034	200-200-610
NSE15-3LX-A	200-200-004	200-452-117	231-9040-0421	200-200-409	200-563-040	200-616-034	200-200-610
NSE18-3LX-A	200-200-005	200-452-117	231-9040-0421	200-200-409	200-563-040	200-616-034	200-200-610
NCE24-3LX-D	200-200-640	200-452-119	231-9045-0421	200-200-415	200-563-040	200-616-039	200-200-613
NCE33-3LX-D	200-200-641	200-452-119	231-9045-0421	200-200-415	200-563-040	200-616-039	200-200-613
NCE40-3LX-D	200-200-642	200-452-119	231-9045-0421	200-200-415	200-563-040	200-616-039	200-200-613
NCE48-3LX-D	200-200-645	200-452-119	231-9045-0421	200-200-417	200-563-040	200-616-039	200-200-614

9. ELECTRICAL COMPONENTS LIST NSQ / NCQ / NDQ (Searle Part Numbers)

Unit Model	Contactor	Overload Auxiliary	Overload	Isolator	EC2 Controller & Terminals Kit	Fan Speed Controller , (Control Module & Cable for –E	Crankcase Heater	Control Panel Assembly
SCQ13-1MX-A	216-131-007	N/A	200-750-140	216-112-317	N/A	216-154-158	200-000-011	SCQ-611-10-AF-1
SCQ18-1MX-A	216-131-007	N/A	200-750-134	216-112-317	N/A	216-154-158	200-000-011	SCQ-611-16-AF-1
SCQ27-1MX-A	216-131-007	N/A	200-750-134	216-112-317	N/A	216-154-158	200-000-011	SCQ-611-16-AF-3
SCQ31-1MX-A	216-131-009	N/A	200-750-142	216-112-301	N/A	216-154-158	200-000-011	SCQ-621-20-AF-4
SCQ7-1LX-A	216-131-007	N/A	200-750-140	216-112-317	N/A	216-154-158	200-000-011	SCQ-611-10-AF-1
SCQ8-1LX-A	216-131-007	N/A	200-750-134	216-112-317	N/A	216-154-158	200-000-011	SCQ-611-16-AF-2
SCQ9-3LX-A	216-131-003	200-200-744	200-200-739	216-112-301	N/A	216-154-158	200-000-011	SCQ-623-06-AF-X
SCQ14-3LX-A	216-131-003	200-200-744	200-200-739	216-112-301	N/A	216-154-158	200-000-011	SCQ-623-06-AF-X
NSQ15-3MX-A	216-131-003	200-200-744	200-200-739	216-112-317	200-800-240 & 200-800-244	216-154-158	200-200-103	44-613-06-AWX
NSQ19-3MX-A	216-131-007	200-200-744	200-200-740	216-112-317	200-800-240 & 200-800-244	216-154-158	200-200-103	44-613-10-AWX
NSQ21-3MX-B	216-131-007	200-200-744	200-200-740	216-112-317	200-800-240 & 200-800-244	216-154-158	200-200-103	44-613-10-BWX
NSQ26-3MX-C	216-131-007	200-200-744	200-200-740	216-112-317	200-800-240 & 200-800-244	216-154-158	200-200-103	44-613-10-CWX
NSQ30-3MX-C	216-131-010	200-200-744	200-200-741	216-112-317	200-800-240 & 200-800-244	216-154-158	200-200-103	44-613-16-CWX
N**D**Q30-3MX-C	216-131-007	200-200-744	200-200-740	216-112-317	200-800-240 & 200-800-244	216-154-158	200-200-103	44-613-10-CDX
NSQ38-3MX-C	216-131-010	200-200-744	200-200-741	216-112-317	200-800-240 & 200-800-244	216-154-158	200-200-103	44-613-16-CWX
NSQ45-3MX-C	216-131-010	200-200-744	200-200-741	216-112-317	200-800-240 & 200-800-244	216-154-158	200-200-103	44-613-16-CWX
N**D**Q45-3MX-C	216-131-010	200-200-744	200-200-741	216-112-317	200-800-240 & 200-800-244	216-154-158	200-200-103	44-613-16-CDX
NCQ56-3MX-D	216-131-010	200-200-744	200-200-741	216-112-302	200-800-240 & 200-800-244	216-154-158	200-200-102	44-633-16-3WX
NCQ56-3MX-E	216-131-010	200-200-744	200-200-741	216-112-302	200-800-240 & 200-800-244	216-154-156	200-200-102	44-633-16-4WX
NCQ75-3MX-E	216-131-012	200-200-744	200-200-743	216-112-302	200-800-240 & 200-800-244	216-154-156	200-200-102	44-633-25-4WX
NCQ92-3MX-E	216-131-014	200-200-744	200-200-788	216-112-302	200-800-240 & 200-800-244	216-154-156	200-200-102	44-633-32-4WX
NCQ110-3MX-E	216-131-014	200-200-744	200-200-788	216-112-302	200-800-240 & 200-800-244	216-154-156	200-200-102	44-633-32-4WX
NSQ9-3LX-A	216-131-003	200-200-744	200-200-739	216-112-317	200-800-240 & 200-800-244	216-154-158	200-200-103	44-613-06-AWX
NSQ11-3LX-A	216-131-007	200-200-744	200-200-740	216-112-317	200-800-240 & 200-800-244	216-154-158	200-200-103	44-613-10-AWX
NSQ13-3LX-A	216-131-007	200-200-744	200-200-740	216-112-317	200-800-240 & 200-800-244	216-154-158	200-200-103	44-613-10-AWX
NSQ13-3L**V**-C	216-131-007	200-200-744	200-200-740	216-112-317	200-800-240 & 200-800-244	216-154-158	200-200-103	
NSQ15-3LX-A	216-131-010	200-200-744	200-200-741	216-112-317	200-800-240 & 200-800-244	216-154-158	200-200-103	44-613-16-AWX
NSQ18-3LX-C	216-131-010	200-200-744	200-200-741	216-112-317	200-800-240 & 200-800-244	216-154-158	200-200-103	44-613-16-CWX
NSQ18-3L**V**-C	216-131-010	200-200-744	200-200-741	216-112-317	200-800-240 & 200-800-244	216-154-158	200-200-103	
N**D**Q18-3L**V**-C	216-131-010	200-200-744	200-200-741	216-112-317	200-800-240 & 200-800-244	216-154-158	200-200-103	
NCQ24-3LX-D	216-131-012	200-200-744	200-200-742	216-112-302	200-800-240 & 200-800-244	216-154-158	200-200-102	44-633-20-3WX
NCQ24-3L**V**-D	216-131-012	200-200-744	200-200-742	216-112-302	200-800-240 & 200-800-244	216-154-158	200-200-102	
NCQ33-3LX-D	216-131-012	200-200-744	200-200-743	216-113-302	200-800-240 & 200-800-244	216-154-158	200-200-102	44-633-25-3WX
NCQ33-3L**V**-E	216-131-012	200-200-744	200-200-743	216-113-302	200-800-240 & 200-800-244	216-154-156	200-200-102	
NCQ40-3LX-D	216-131-014	200-200-744	200-200-788	216-112-302	200-800-240 & 200-800-244	216-154-158	200-200-102	44-633-32-3WX
NCQ40-3L**V**-E	216-131-014	200-200-744	200-200-788	216-112-302	200-800-240 & 200-800-244	216-154-156	200-200-102	
NCQ48-3LX-D	216-131-014	200-200-744	200-200-788	216-112-302	200-800-240 & 200-800-244	216-154-158	200-200-102	44-633-32-3WX
NCQ48-3L**V**-E	216-131-014	200-200-744	200-200-788	216-112-302	200-800-240 & 200-800-244	216-154-156	200-200-102	
NSE15-3MX-A	216-131-003	200-200-744	200-200-739	216-112-317	N/A	216-154-158	200-200-103	44-613-06-AXX
NSE19-3MX-A	216-131-007	200-200-744	200-200-740	216-112-317	N/A	216-154-158	200-200-103	44-613-10-AXX
NSE21-3MX-A	216-131-007	200-200-744	200-200-740	216-112-317	N/A	216-154-158	200-200-103	44-613-10-AXX
NSE26-3MX-B	216-131-007	200-200-744	200-200-740	216-112-317	N/A	216-154-158	200-200-103	44-613-10-BXX
NSE30-3MX-B	216-131-010	200-200-744	200-200-741	216-112-317	N/A	216-154-158	200-200-103	44-613-16-BXX
NSE38-3MX-B	216-131-010	200-200-744	200-200-741	216-112-317	N/A	216-154-158	200-200-103	44-613-16-BXX
NSE45-3MX-B	216-131-010	200-200-744	200-200-741	216-112-317	N/A	216-154-158	200-200-103	44-613-16-BXX
NCE56-3MX-D	216-131-010	200-200-744	200-200-741	216-113-302	N/A	216-154-158	200-200-102	44-633-16-3WX
NCE75-3MX-D	216-131-012	200-200-744	200-200-743	216-113-302	N/A	216-154-158	200-200-102	44-633-25-3WX
NCE92-3MX-E	216-131-014	200-200-744	200-200-788	216-112-302	N/A	216-154-156	200-200-102	44-633-32-4WX
NCE110-3MX-E	216-131-014	200-200-744	200-200-788	216-112-302	N/A	216-154-156	200-200-102	44-633-32-4WX
NSE9-3LX-A	216-131-003	200-200-744	200-200-739	216-112-317	N/A	216-154-158	200-200-103	44-613-06-AXX
NSE11-3LX-A	216-131-007	200-200-744	200-200-740	216-112-317	N/A	216-154-158	200-200-103	44-613-10-AXX
NSE13-3LX-A	216-131-007	200-200-744	200-200-740	216-112-317	N/A	216-154-158	200-200-103	44-613-10-AXX
NSE15-3LX-A	216-131-010	200-200-744	200-200-741	216-112-317	N/A	216-154-158	200-200-103	44-613-16-AXX
NSE18-3LX-A	216-131-010	200-200-744	200-200-741	216-112-317	N/A	216-154-158	200-200-103	44-613-16-AXX
NCE24-3LX-D	216-131-012	200-200-744	200-200-742	216-112-302	N/A	216-154-158	200-200-102	44-633-20-3WX
NCE33-3LX-D	216-131-012	200-200-744	200-200-743	216-113-302	N/A	216-154-158	200-200-102	44-633-25-3WX
NCE40-3LX-D	216-131-014	200-200-744	200-200-788	216-112-302	N/A	216-154-158	200-200-102	44-633-32-3WX
NCE48-3LX-D	216-131-014	200-200-744	200-200-788	216-112-302	N/A	216-154-158	200-200-102	44-633-32-3WX

*** FSC Parts 216-154-143 & 216-154-144 are only required for units without EC2 Controller (Elec. options F,W & T.)**

10. NSQ & NDQ EC2 Controller Parameters, (Units with EC fans and/or digital compressor).

Controller 1 (Compressor controller)

/	DISPLAY PARAMETERS	Min	Max	Unit	Def	Individ.
/1	Value to be shown on display 0 = compressors and fans states (controller 1 and 2) 1 = suction pressure (bar) 2 = saturation temperature from suction pressure (°C) 3 = condensing pressure (bar) 4 = saturation temperature from condensing pressure (°C) 5 = Digital Scroll capacity (%) 6 = fan speed (%) 7 = Digital Scroll discharge temperature (°C)	0	7	-	0	

P	SET-POINT PARAMETERS - C1					
P0	Pressure set-point (suction) for compressor circuit	-1.0	50	bar	3.0	
P1	Pressure band (control band for P/PI, dead band for dead band control mode)	0.0	50	bar	2.0	
P3	Fast recovery from low pressure	-9.9	50	bar	-9.9	
P8	High discharge pressure recovery	-9.9	50	bar	50	
t	**TIME PARAMETERS**					
t1[1]	Time delay before adding capacity	0	99	10sec	3	
t2[1]	Time delay before removing capacity	0	99	10sec	3	
t3[1]	Compressor minimum on time	0	99	10sec	6	
t4[1]	Compressor minimum off time	0	99	10sec	6	
t5	Maximum compressor switching	0	199	1/hr	0	
A	**ALARM PARAMETERS - C1**					
A2	Minimum suction pressure alarm limit	-1.0	50	bar	1.0	
A3	Maximum suction pressure alarm limit	-1.0	50	bar	6.0	
A4[1]	Delay time for minimum pressure alarm limit	0	99	10sec	0	
A5[1]	Delay time for maximum pressure alarm limit	0	99	10sec	0	
A6	High discharge temperature cut-out cut-in = cut-out – 10°C	100	140	°C	130	
A8[1]	Compressor serial alarm delay	0	99	10sec	0	
A9[2]	Compressor run limit	0	99	10 000hr	0	
u	**STEP ENABLE PARAMETERS - C1**					
u0	Reset operating time 0 = do nothing 1 = reset operating time compressor 1 2 = reset operating time compressor 2 3 = reset operating time all compressors	0	3	-	0	
u1	Enable/disable compressor 1	0	1	flag	1	
u2	Enable/disable compressor 2	0	1	flag	1	
c	**APPLICATION PARAMETERS - C1**					
c1	Number of compressors	1	2	-	0.0	
c4	Compressor 1 control mode 0 = compressor 1 in standard control loop 1 = compressor 1 act as base load compressor 2 = compressor 1 is a digital scroll compressor & base load	0	2	-	0 – NSQ/E 0 - NCQ/E 2 - NDQ	
c5	Compressor switch logic 0 = FILO logic (First In, Last Out) Capacity demand: Adds first compressor out of available compressors. (= compressors where min off time (t4) is fulfilled) Capacity excess: Removes last compressor out of available compressors. (= compressors where min on time (t3) is fulfilled) 1 = Rotation enabled Capacity demand: Adds compressor with lowest runtime out of available compressors. (= where min off time (t4) is fulfilled) Capacity excess: Removes compressor with highest runtimes out of available compressors. (= where min on time (t3) is fulfilled)	0	1	flag	0	
c6	Number of compressors to switch on in case of sensor failure	0	2	-	0	
F	**MODULATING PARAMETERS - C1**					
F2	Minimum output value	10	100	%	20	
F3	Maximum output value	10	100	%	100	
F6	PWM rate (Digital scroll)	10	20	sec	20	
r	**SENSOR PARAMETERS - C1**					
r0	Suction pressure sensor minimum value	-1.0	50	bar	0.0	

	SENSOR PARAMETERS - C1 (continued)	Min	Max	Unit	Def	Individ.
r1	Suction pressure sensor maximum value	-1.0	50	bar	18.0	
r2	Pressure offset for suction pressure	-1.0	1.0	bar	0.0	
r3	Refrigerant type 0 = no temperature conversion; 1 = R22; 2 = R134a; 3 = R507; 4 = R404A; 5 = R407C	0	5	-	4	

Controller 2 (Fan controller)

P	SET-POINT PARAMETERS - C2					
P0	Pressure set-point (condensing) for fan circuit	-1.0	50	bar	14.0	
P1	Pressure band (control band for P/PI, dead band for dead band control mode)	0.0	50	bar	4.0	
A	**ALARM PARAMETERS - C2**					
A2	Minimum condensing pressure alarm limit	-1.0	50	bar	10.0	
A3	Maximum condensing pressure alarm limit	-1.0	50	bar	27	
A4[1]	Delay time for minimum pressure alarm limit	0	99	10sec	0	
A5[1]	Delay time for maximum pressure alarm limit	0	99	10sec	0	
A9[2]	Fan run limit	0	99	10kHr	0	
u	**STEP ENABLE PARAMETERS - C2**					
u0	Reset operating time 0 = do nothing 1 = reset operating time fan 1	0	1	-	0	
u1	Enable/disable fan 1	0	1	flag	1	
c	**APPLICATION PARAMETERS - C2**					
c6	Fan behaviour on in case of sensor failure 0 = Analog output 0% (0 V) 1 = Analog output 100% (10 V)	0	1	-	0	
F	**MODULATING PARAMETERS - C2**					
F2	Minimum output value	0	100	%	0	
F3	Maximum output value	0	100	%	100	
r	**SENSOR PARAMETERS - C2**					
r0	Condensing pressure sensor minimum value	-1.0	50	bar	0.0	
r1	Condensing pressure sensor maximum value	-1.0	50	bar	30	
r2	Pressure offset for condensing pressure	-1.0	1.0	bar	0.0	
H	**OTHER PARAMETERS**					
H2	Keyboard and IR remote control 0 = all disabled (Caution, access to controller only via network possible) 1 = Keyboard enabled 2 = IR remote control enabled 3 = Keyboard and IR remote control enabled	0	3	-	3	
H3	IR remote control access code	0	199	-	0	
H5	Password	0	199	-	12	

[1] These values have a resolution of 10 sec, on the local display. Ex. a value 2 means 20 sec.
[2] These values have a resolution of 10.000 hours, on the local display. Ex. a value 2 means 20.000 hours.

11. WIRING SCHEMATICS AND CONTROL PANEL LAYOUTS

Please refer to the part number of the unit to select the correct wiring diagram from the table below.
Select the wiring diagram from the model type of the unit, then unit size, then by electrical supply, and finally by Condenser fan type. For Example :-

SCQ13-**1**MX-A (No Options)
SCQ - Model Type, **13** - unit size, **-1 –** 1 phase supply, AC Fans, Use drawing SCQ-611-06-XXX-W

SCQ9-3LX-A (No Options)
SCQ - Model Type, **9** - unit size, **-3 – 3** phase supply, AC Fans, Use drawing SCQ-613-XXX-W

NSE15-**1**MX-A
NSE - Model Type, **15** - unit size, **-1 –** 1 phase supply, AC Fans, Use drawing 44-611-06-XXX-W

NSQ45-**3**MS-C3**W**I-PV
NSQ - Model Type, **45** - unit size, **-3 –** 3 phase supply. **W** – Unit with Fan speed control, Anti Cycle Timer and alarm relay, AC Fans, use drawing 44-613-06-XXX-W.

NDQ45-**3**MS-C3**E**I-C
NDQ - Model Type, **45** - unit size, **-3 –** 3 phase supply. **E** – Unit with Electronic control, EC Fans, use drawing 44-613-06-XXX-W.

Wiring diagrams for units with AC standard fansets cover all electrical options F, W and T.
Wiring diagrams for units with EC fansets cover electrical option E.
Units with Digital compressors are fitted with electronic controls and AC fans as standard, units may also be fitted with EC fans as an option.

UNIT TYPE	UNIT SIZE	3Ph or 1Ph	AC FANS (Opts. F/W/T)	EC FANS (Opts. E)	Layout Drawing
SCQ	All Units	1	SCQ-**611-06**-XXX-W (p10)	N/A	SCQ-6X1-XX (p12)
	All Units	3	SCQ-**613-06**-XXX-W (p11)		SCQ-6X3-XX (p13)
NSQ NSE	15	1	44-**611-16**-XXX-W (p14)	44-**611-16**-X**E**X-W (p15)	44-611-ST2 (p23)
NSQ NSE	19 to 26	1	44-**611-06**-XXX-W (p16)	44-**611-06**-X**E**X-W (p17)	44-611-ST2 (p23)
NSQ NSE	15 to 45	3	44-**613-06**-XXX-W (p18)	44-**613-06-**X**E**X-W (p19)	44-613-ST2 (p24)
NDQ	30 to 45	3	44-**613**-X**D**X-W (p20)	44-**613**-06-X**E**X-W (p19)	44-613-ST2 (p24)
NCQ NCE	56 to 110	3	44-**633-16**-XXX-W (p22)	N/A	44-633-3-ST2 (p24)

11a. SCQ All Units -1MX-A : SCQ-611-06-XXX-W : Single Phase with AC Fans

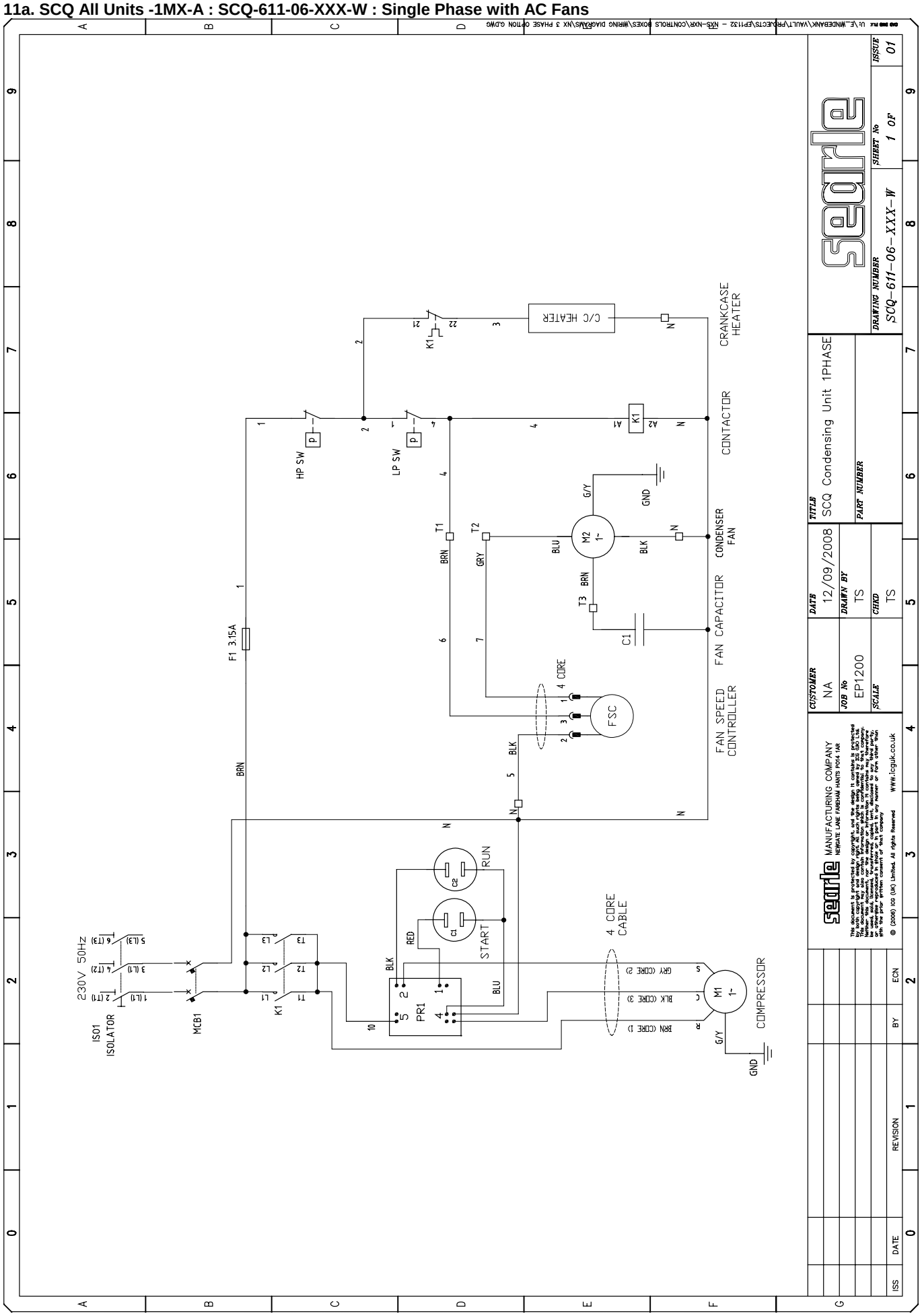

11b. SCQ All Units -3MX-A : SCQ-613-06-XXX-W : Three Phase with AC Fans

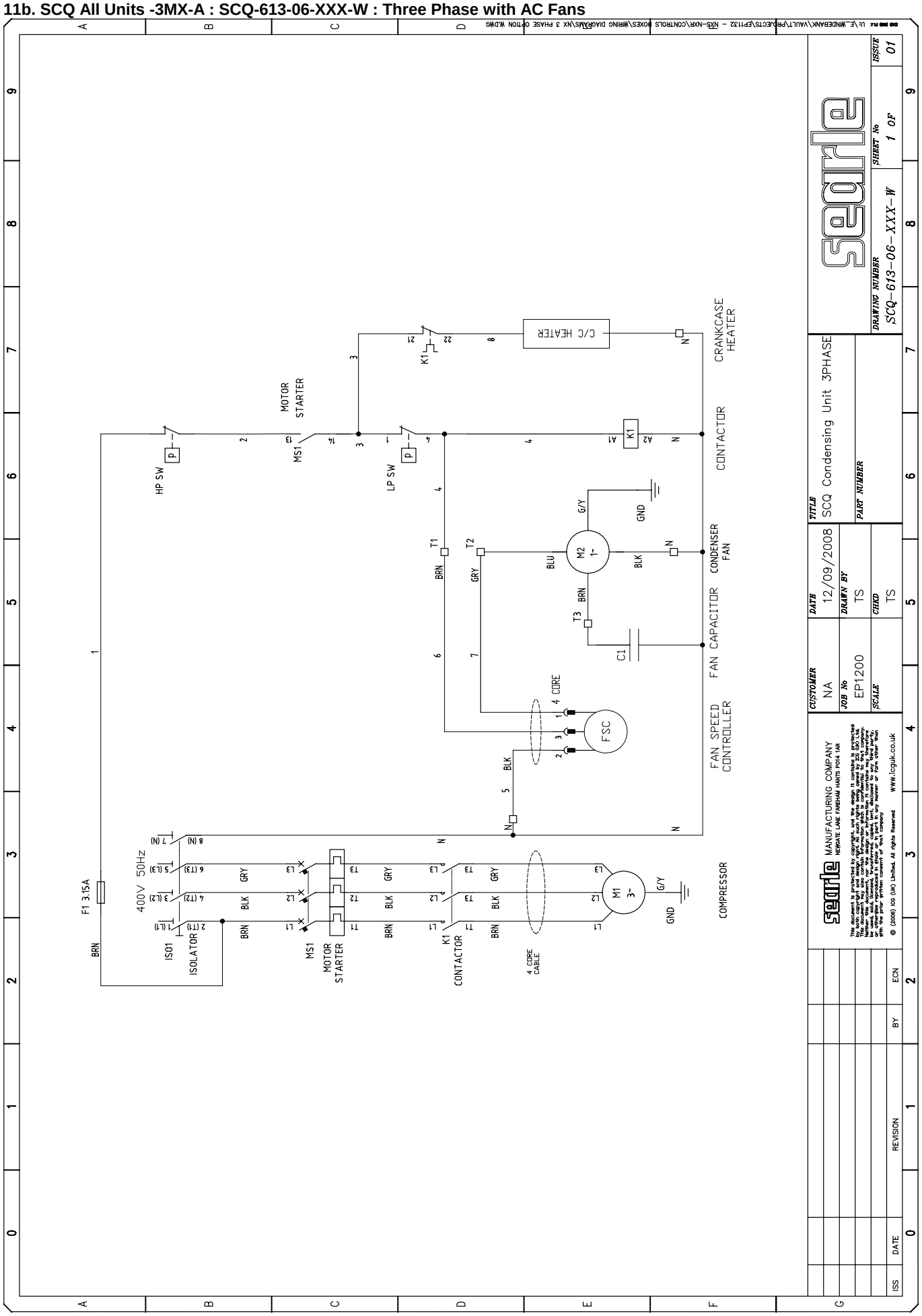

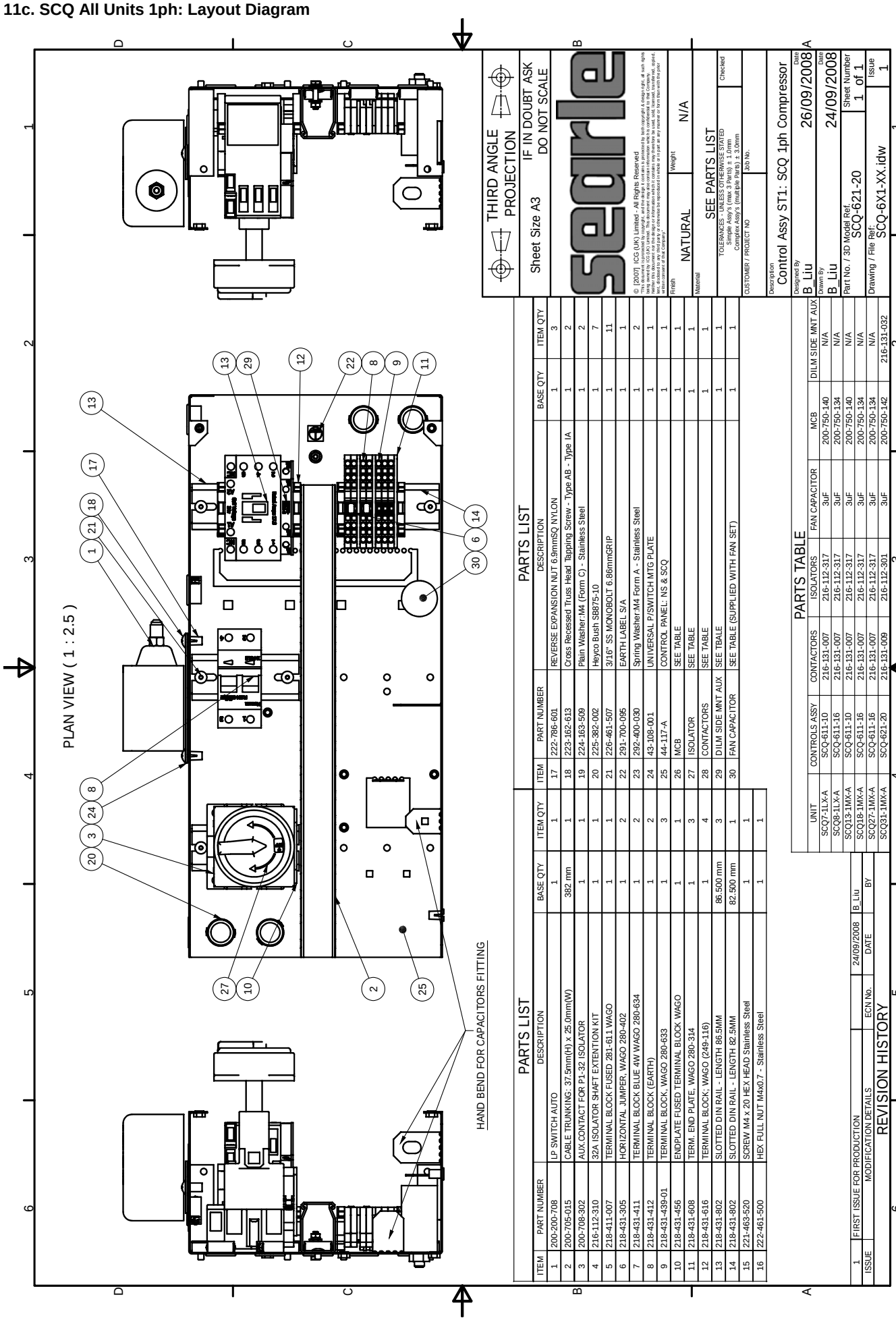

PARTS LIST

ITEM	PART NUMBER	DESCRIPTION	BASE QTY	ITEM QTY
1	200-200-708	LP SWITCH AUTO	1	1
2	200-705-015	CABLE TRUNKING: 37.5mm(H) x 25.0mm(W)	382 mm	1
3	200-708-302	AUX.CONTACT FOR P1-32 ISOLATOR	1	1
4	216-112-310	32A ISOLATOR SHAFT EXTENTION KIT	1	1
5	218-411-007	TERMINAL BLOCK FUSED 281-611 WAGO	1	1
6	218-431-305	HORIZONTAL JUMPER, WAGO 280-402	1	2
7	218-431-411	TERMINAL BLOCK BLUE 4W WAGO 280-634	1	2
8	218-431-412	TERMINAL BLOCK (EARTH)	1	2
9	218-431-439-01	TERMINAL BLOCK, WAGO 280-633	1	3
10	218-431-456	ENDPLATE FUSED TERMINAL BLOCK WAGO	1	1
11	218-431-608	TERM. END PLATE, WAGO 280-314	1	3
12	218-431-616	TERMINAL BLOCK; WAGO (249-116)	1	4
13	218-431-802	SLOTTED DIN RAIL - LENGTH 86.5MM	86.500 mm	3
14	218-431-802	SLOTTED DIN RAIL - LENGTH 82.5MM	82.500 mm	1
15	221-463-520	SCREW M4 x 20 HEX HEAD Stainless Steel	1	1
16	222-461-500	HEX FULL NUT M4x0.7 - Stainless Steel	1	1

PARTS LIST

ITEM	PART NUMBER	DESCRIPTION	BASE QTY	ITEM QTY
17	222-786-601	REVERSE EXPANSION NUT 6.9mmSQ NYLON	1	3
18	223-162-613	Cross Recessed Truss Head Tapping Screw - Type AB - Type IA	1	2
19	224-163-509	Plain Washer:M4 (Form C) - Stainless Steel	1	2
20	225-382-002	Heyco Bush SB875-10	1	7
21	226-461-507	3/16" SS MONOBOLT 6.86mmGRIP	1	11
22	291-700-095	EARTH LABEL S/A	1	1
23	292-400-030	Spring Washer:M4 Form A - Stainless Steel	1	2
24	43-108-001	UNIVERSAL P/SWITCH MTG PLATE	1	1
25	44-117-A	CONTROL PANEL: NS & SCQ	1	1
26	MCB	SEE TABLE	1	1
27	ISOLATOR	SEE TABLE	1	1
28	CONTACTORS	SEE TABLE	1	1
29	D1LM SIDE MNT AUX	SEE TBALE	1	1
30	FAN CAPACITOR	SEE TABLE (SUPPLIED WITH FAN SET)	1	1

PARTS TABLE

UNIT	CONTROLS ASSY	CONTACTORS	ISOLATORS	FAN CAPACITOR	MCB	D1LM SIDE MNT AUX
SCQ7-1LX-A	SCQ-611-10	216-131-007	216-112-317	3uF	200-750-140	N/A
SCQ8-1LX-A	SCQ-611-16	216-131-007	216-112-317	3uF	200-750-134	N/A
SCQ13-1MX-A	SCQ-611-10	216-131-007	216-112-317	3uF	200-750-140	N/A
SCQ18-1MX-A	SCQ-611-16	216-131-007	216-112-317	3uF	200-750-134	N/A
SCQ27-1MX-A	SCQ-611-16	216-131-007	216-112-317	3uF	200-750-134	N/A
SCQ31-1MX-A	SCQ-621-20	216-131-009	216-112-301	3uF	200-750-142	216-131-032

11d. SCQ All Units 3ph: Layout Diagram

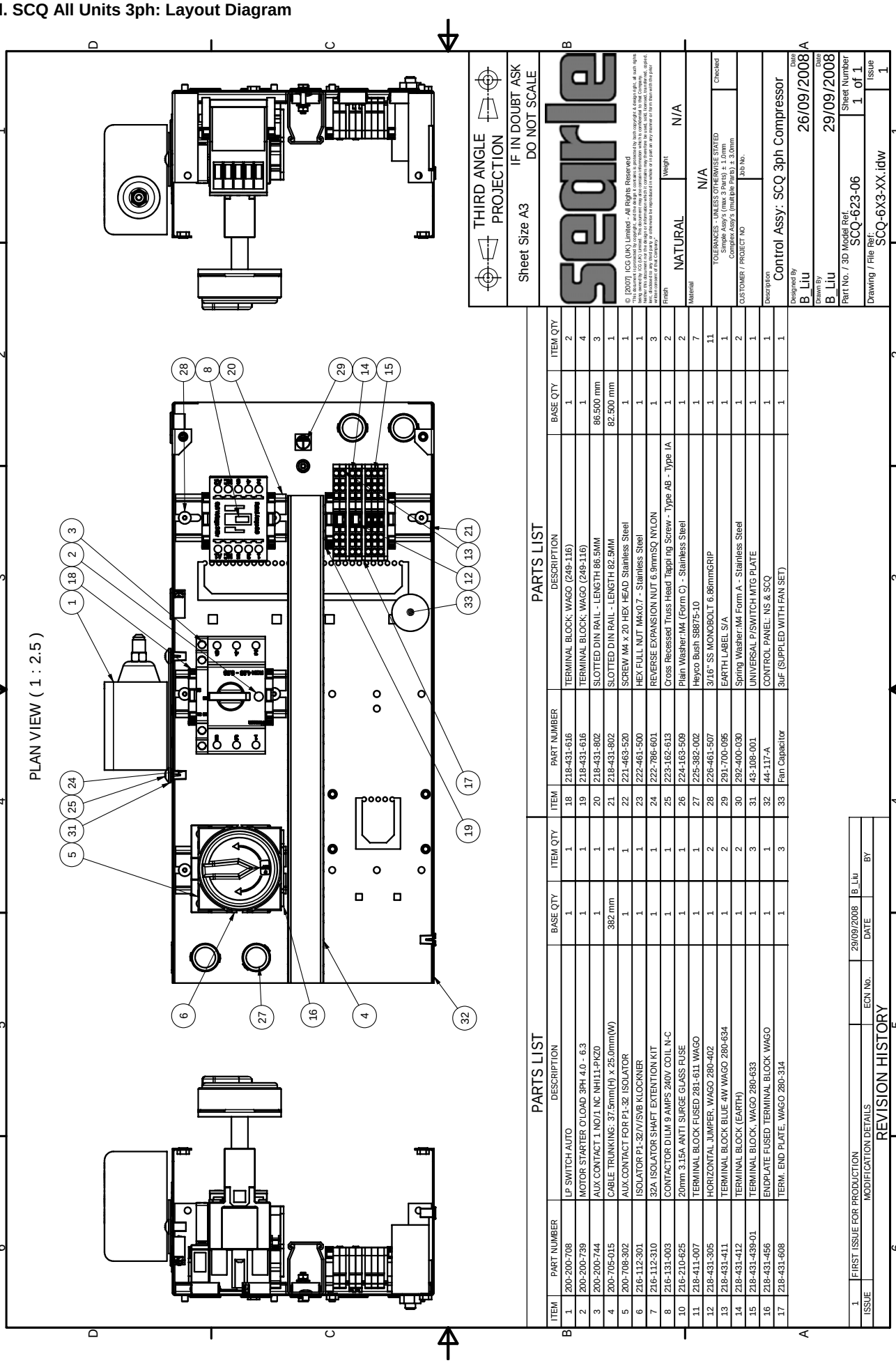

ITEM	PART NUMBER	DESCRIPTION	BASE QTY	ITEM QTY
1	200-200-708	LP SWITCH AUTO	1	1
2	200-200-739	MOTOR STARTER O'LOAD 3PH 4.0 - 6.3	1	1
3	200-200-744	AUX CONTACT 1 NO/1 NC NH111-PKZ0	1	1
4	200-705-015	CABLE TRUNKING: 37.5mm(H) x 25.0mm(W)	382 mm	1
5	200-708-302	AUX.CONTACT FOR P1-32 ISOLATOR	1	1
6	216-112-301	ISOLATOR P1-32/V/SVB KLOCKNER	1	1
7	216-112-310	32A ISOLATOR SHAFT EXTENTION KIT	1	1
8	216-131-003	CONTACTOR DILM 9 AMPS 240V COIL N-C	1	1
10	216-210-625	20mm 3.15A ANTI SURGE GLASS FUSE	1	1
11	218-411-007	TERMINAL BLOCK FUSED 281-611 WAGO	1	1
12	218-431-305	HORIZONTAL JUMPER, WAGO 280-402	1	2
13	218-431-411	TERMINAL BLOCK BLUE 4W WAGO 280-634	1	2
14	218-431-412	TERMINAL BLOCK (EARTH)	1	2
15	218-431-439-01	TERMINAL BLOCK, WAGO 280-633	1	3
16	218-431-456	ENDPLATE FUSED TERMINAL BLOCK WAGO	1	1
17	218-431-608	TERM. END PLATE, WAGO 280-314	1	3
18	218-431-616	TERMINAL BLOCK, WAGO (249-116)	1	1
19	218-431-616	TERMINAL BLOCK, WAGO (249-116)	1	1
20	218-431-802	SLOTTED DIN RAIL - LENGTH 86.5MM	86.500 mm	1
21	218-431-802	SLOTTED DIN RAIL - LENGTH 82.5MM	82.500 mm	1
22	221-463-520	SCREW M4 x 20 HEX HEAD Stainless Steel	1	1
23	222-461-500	HEX FULL NUT M4x0.7 - Stainless Steel	1	1
24	222-786-601	REVERSE EXPANSION NUT 6.9mmSQ NYLON	1	3
25	223-162-613	Cross Recessed Truss Head Tappi ng Screw - Type AB - Type IA	1	2
26	224-163-509	Plain Washer:M4 (Form C) - Stainless Steel	1	2
27	225-382-002	Heyco Bush SB875-10	1	7
28	226-461-507	3/16" SS MONOBOLT 6.86mmGRIP	1	11
29	291-700-095	EARTH LABEL S/A	1	1
30	292-400-030	Spring Washer:M4 Form A - Stainless Steel	1	2
31	43-108-001	UNIVERSAL P/SWITCH MTG PLATE	1	1
32	44-117-A	CONTROL PANEL: NS & SCQ	1	1
33	Fan Capacitor	3uF (SUPPLED WITH FAN SET)	1	1

© [2007] ICG (UK) Limited - All Rights Reserved
This drawing and design is the copyright of ICG (UK) Limited and is protected by both copyright & design right, all such rights are owned by ICG (UK) Limited. This document may also contain information which is confidential to that company. Unauthorised use, copying or disclosure of this drawing or any part of it or any information contained in it is prohibited by law, subject to any limitations or exceptions permitted by law, or otherwise be reproduced in whole or in part in any manner or form than with the prior written consent of that company.

11e. NSQ/NSE15-1MX-A : 44-611-16-XXX-W : ZB15 Single Phase with AC Fans

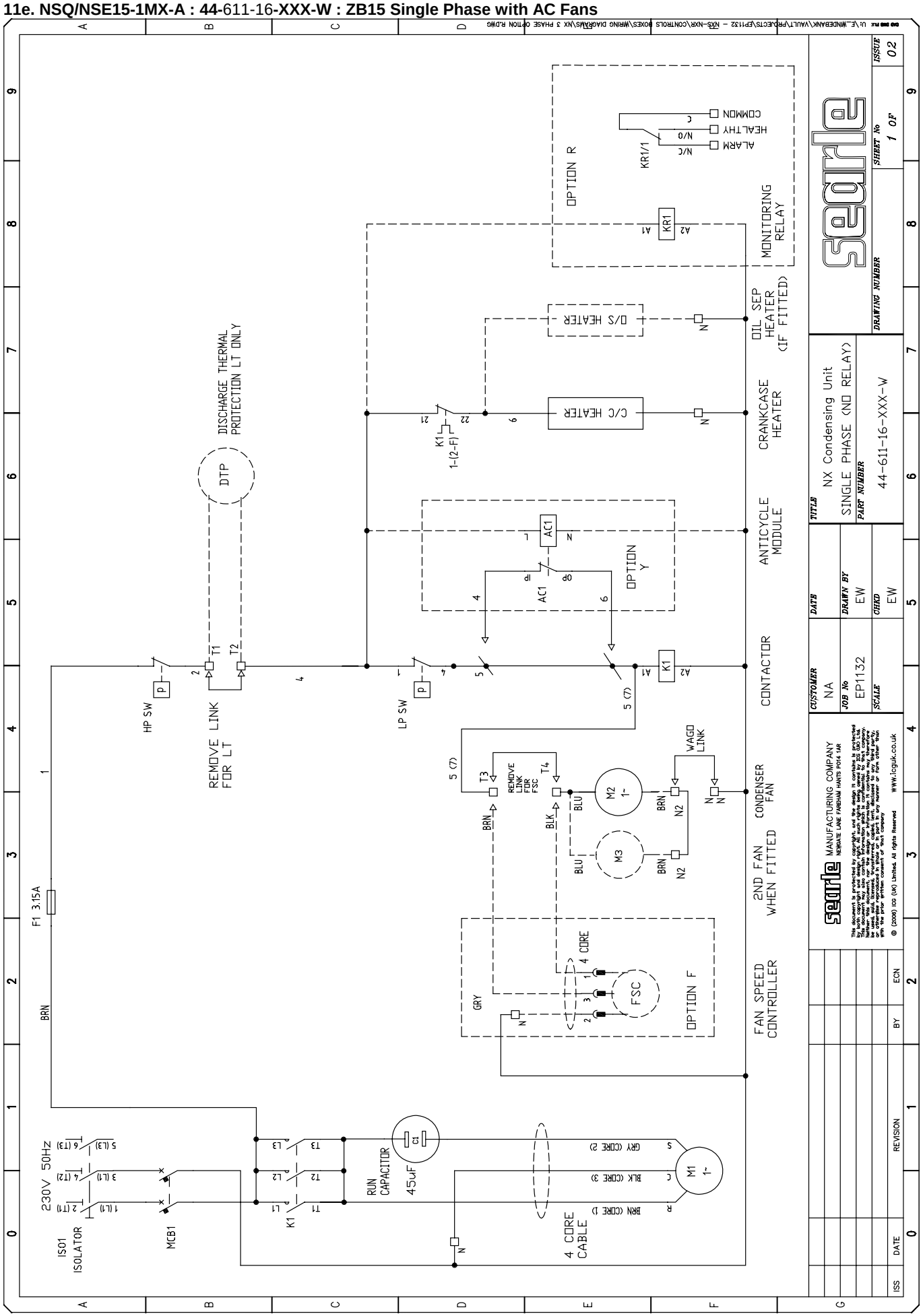

11f. NSQ/NSE15-1MX-A2-E : 44-611-16-XEX-W : ZB15 Single Phase with EC Fans

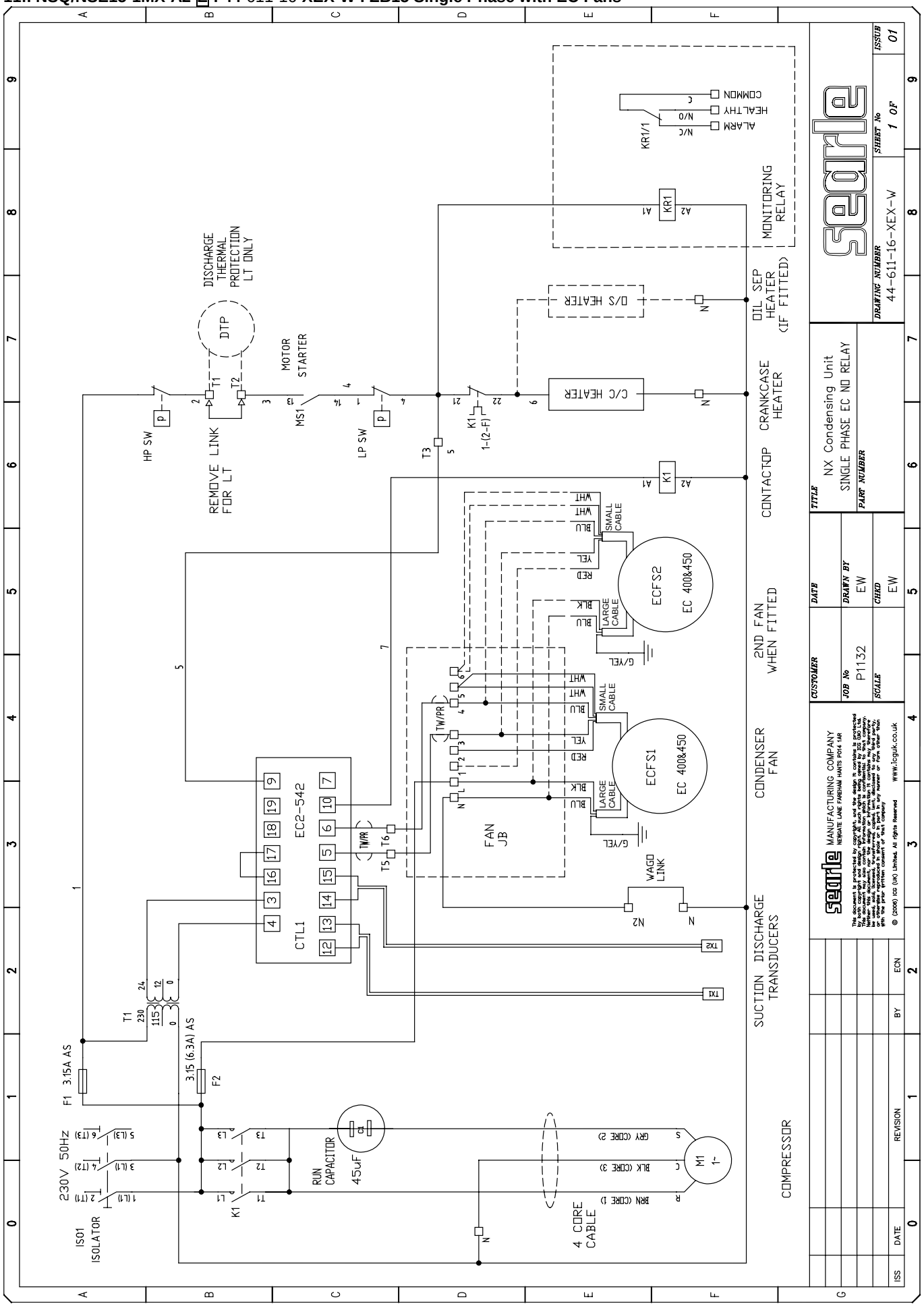

11g. NSQ/NSE19 to 26 -1MX-A, B or C : 44-611-06**-XXX-W : ZB19 to ZB26 Single Phase AC Fans**

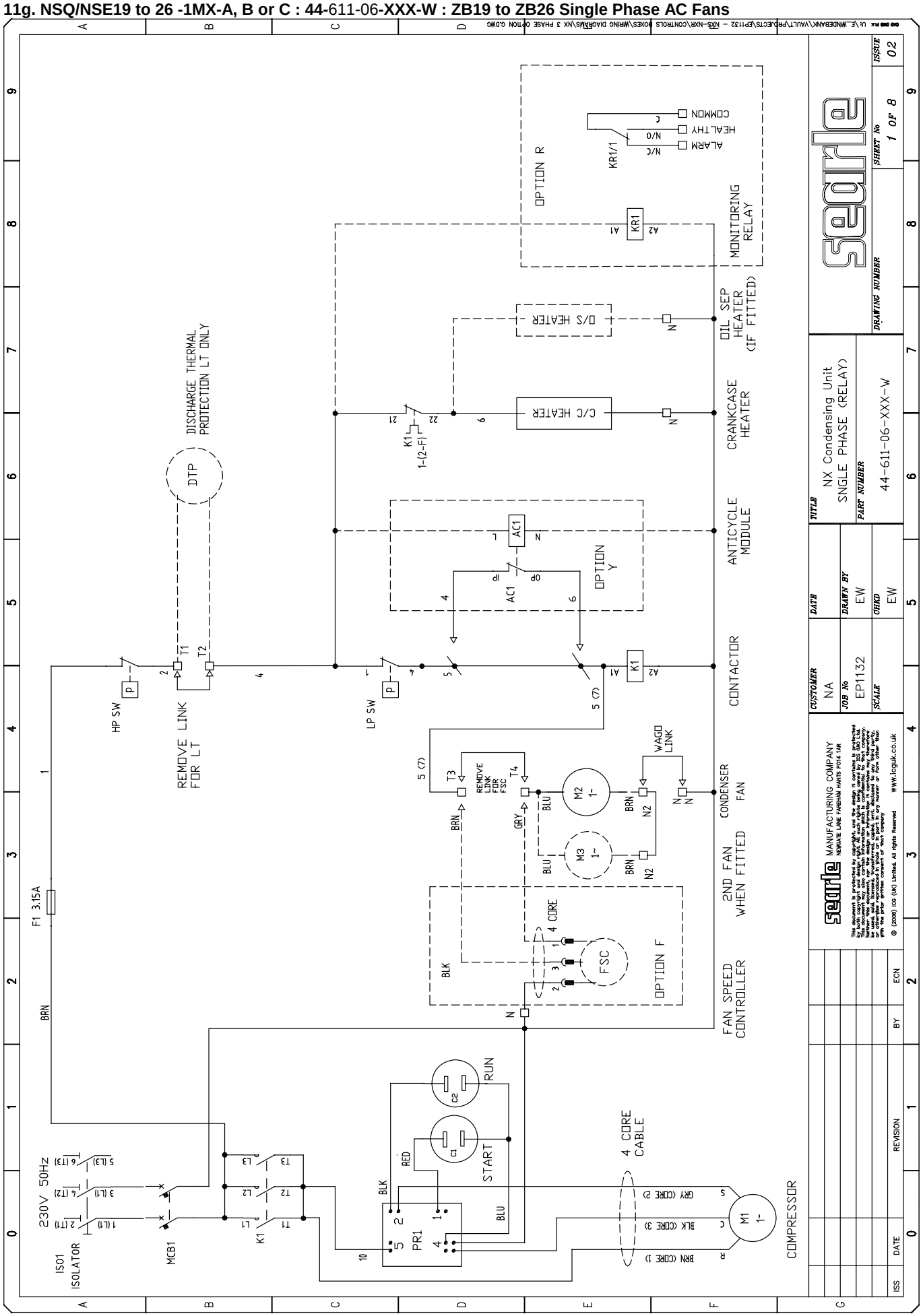

11h. NSQ/NSE19 to 26 -1MX-A/B/C 2/3 E : 44-611-06-XEX-W : ZB19 to ZB26 Single Phase EC Fans

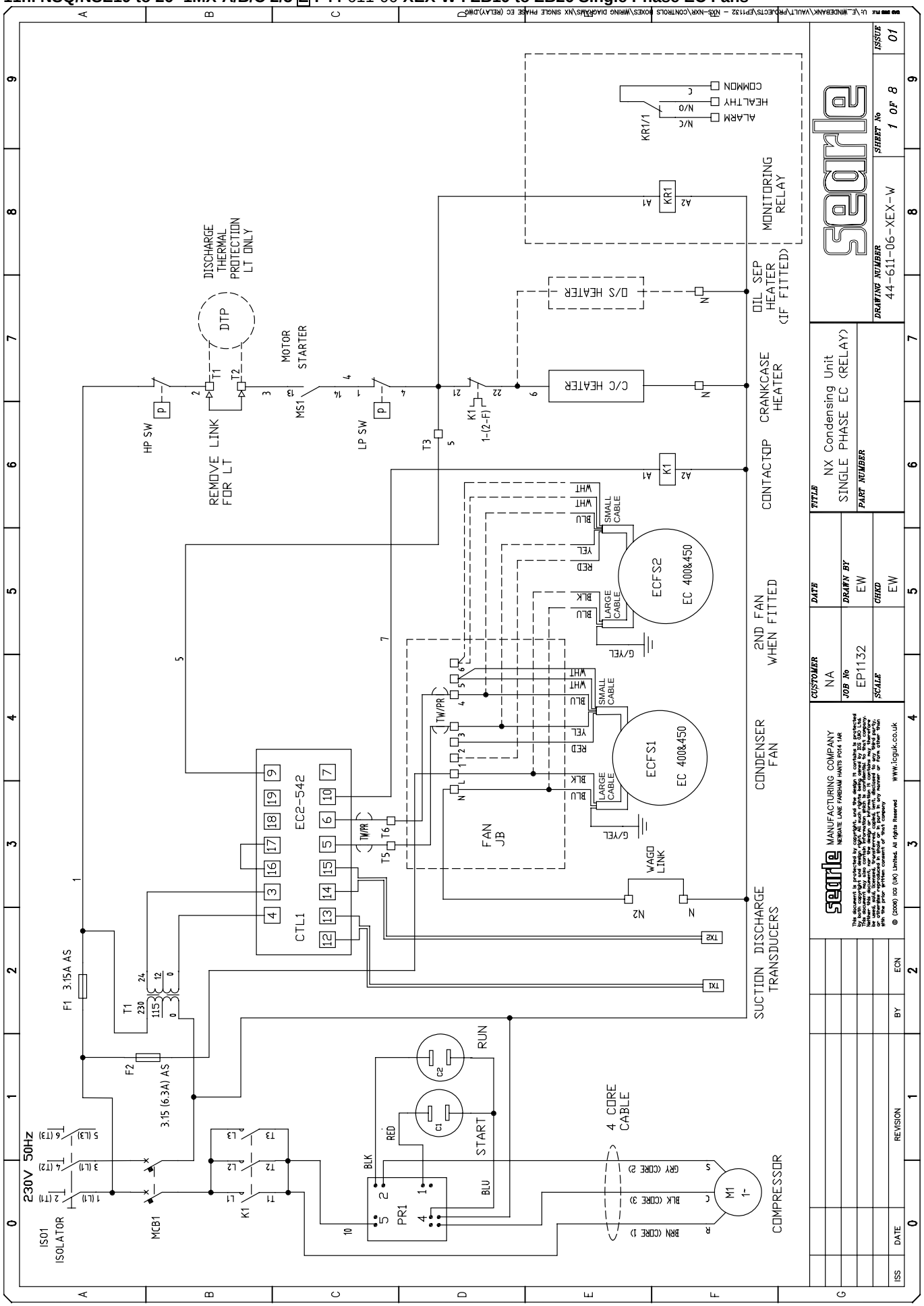

11i. NSQ/NSE15 to 45 -3MX-A/B/C : 44-613-06-XXX-W : ZB15 to ZB45 Three Phase AC Fans

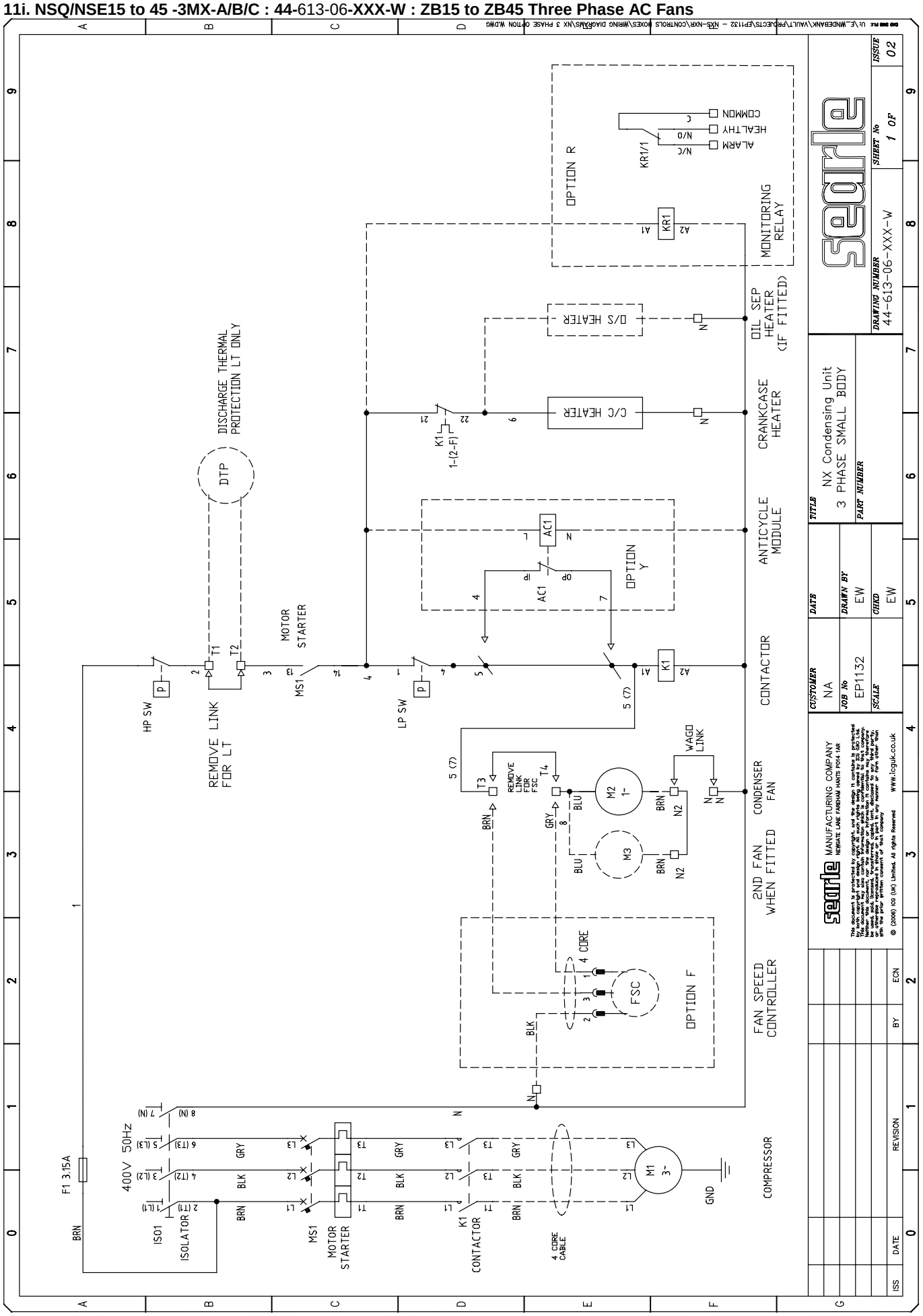

11j. NSQ/NSE15 to 45 -3MX/S-A/B/C 2/3 E : 44-613-06**-XEX-W : ZB15 to ZB45 Three Phase, EC Fans**
NDQ30 to 45 –3MX/S-C 2/3 E : ZBD30 to ZBD45 Three Phase, EC Fans

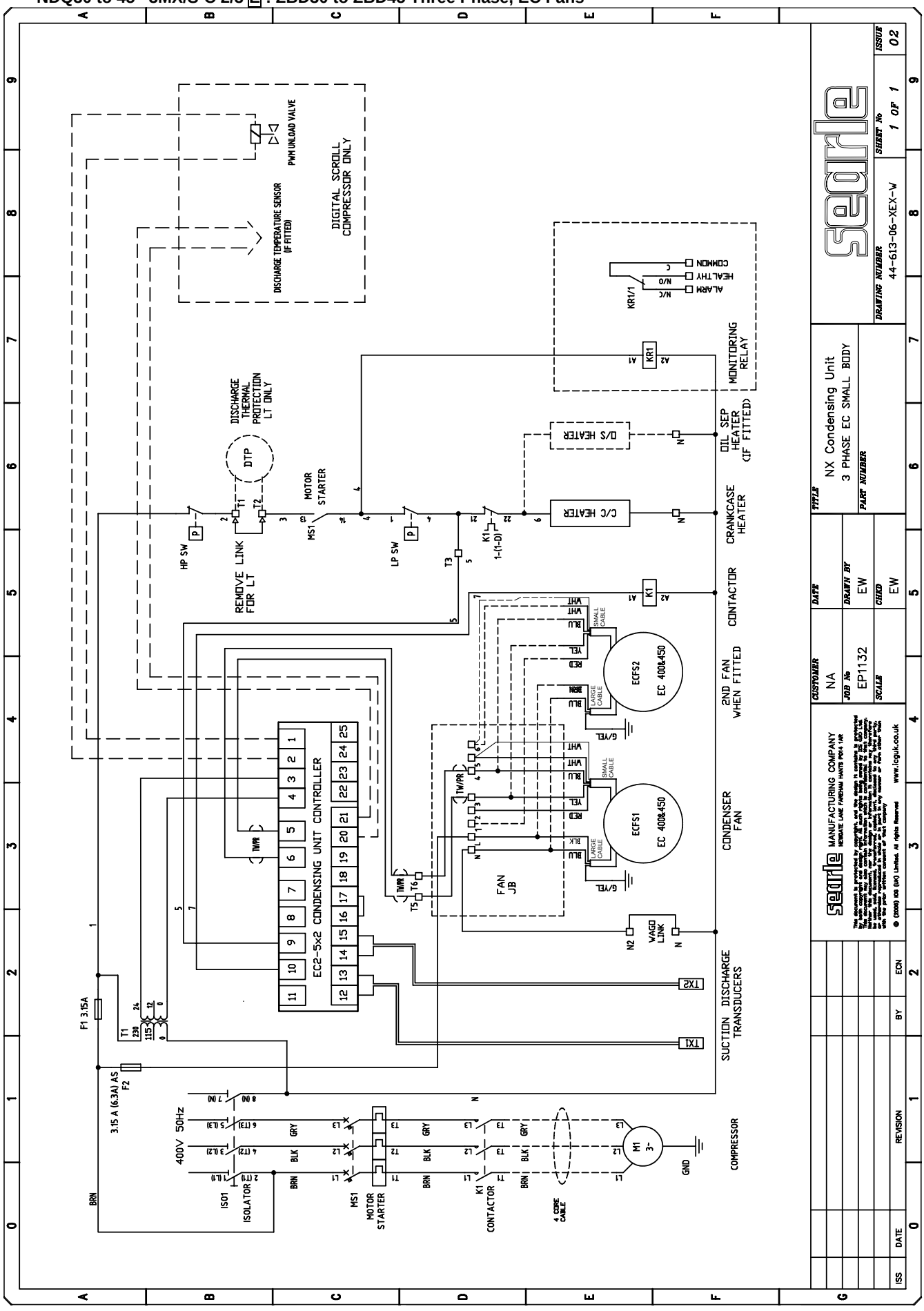

11k. NDQ 30 to 45 -3MX/S-C : 44-613-XDX-W : ZBD30 to ZBD45 Three Phase AC Fans

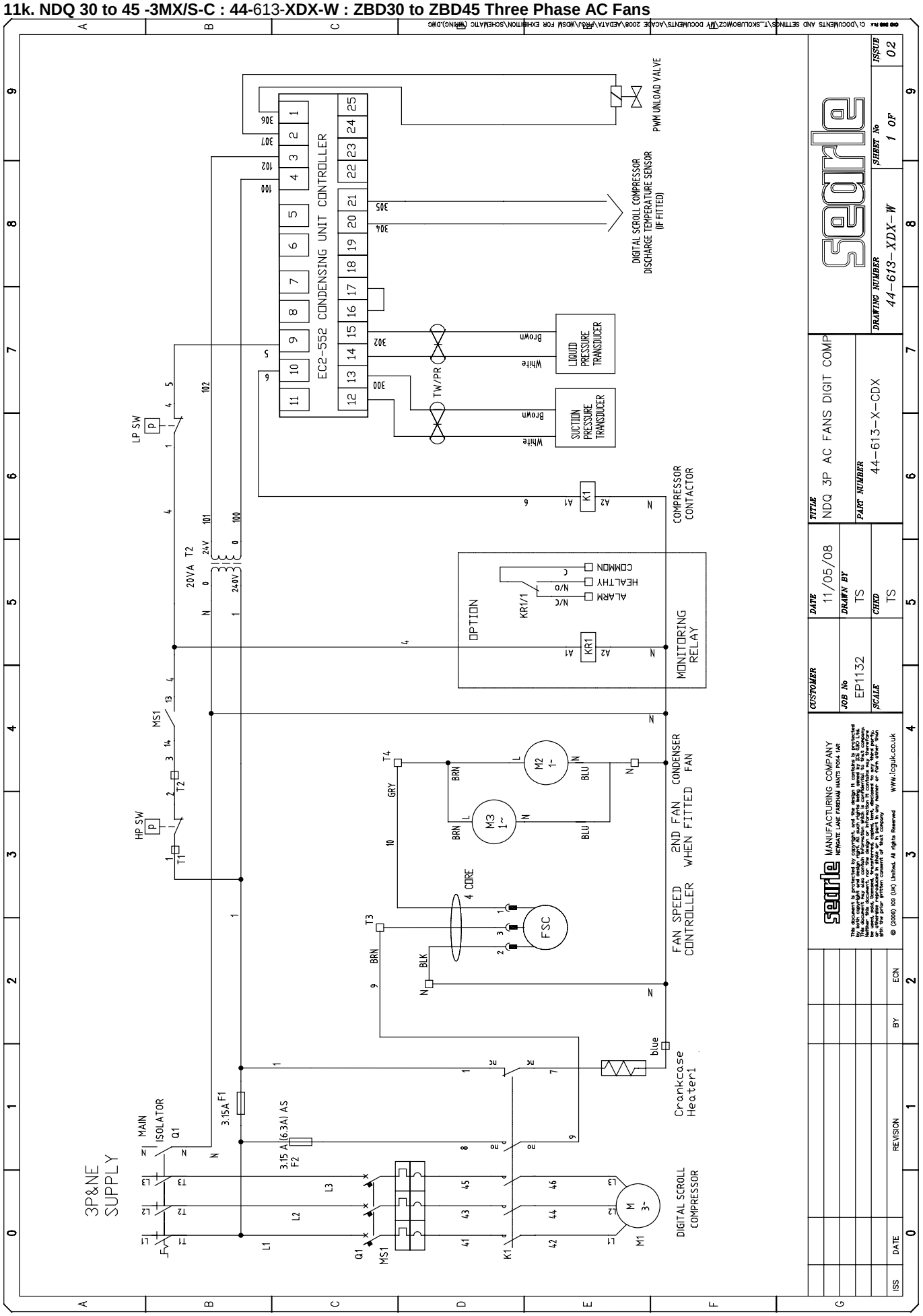

11l. NCQ/NCE 56 to 110 -3MX/S-D/E 2/3 : 44-633-16-XXX-W : ZB56 to ZB11 Three Phase, AC Fans

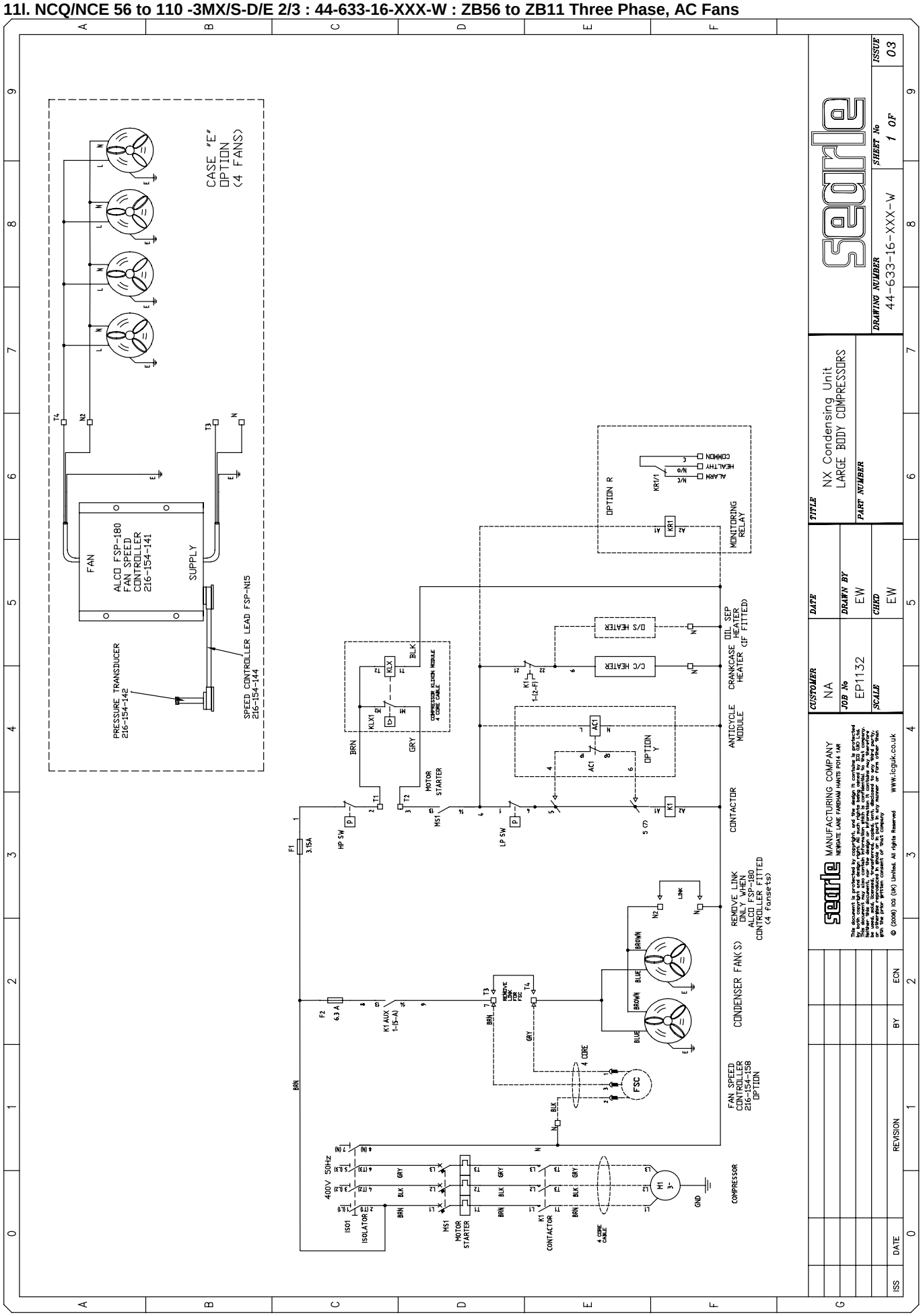

11m. NSQ/NSE 15 to 30 -1MX/S-A/B/C 2/3 : 44-611-ST2 Layout Diagram

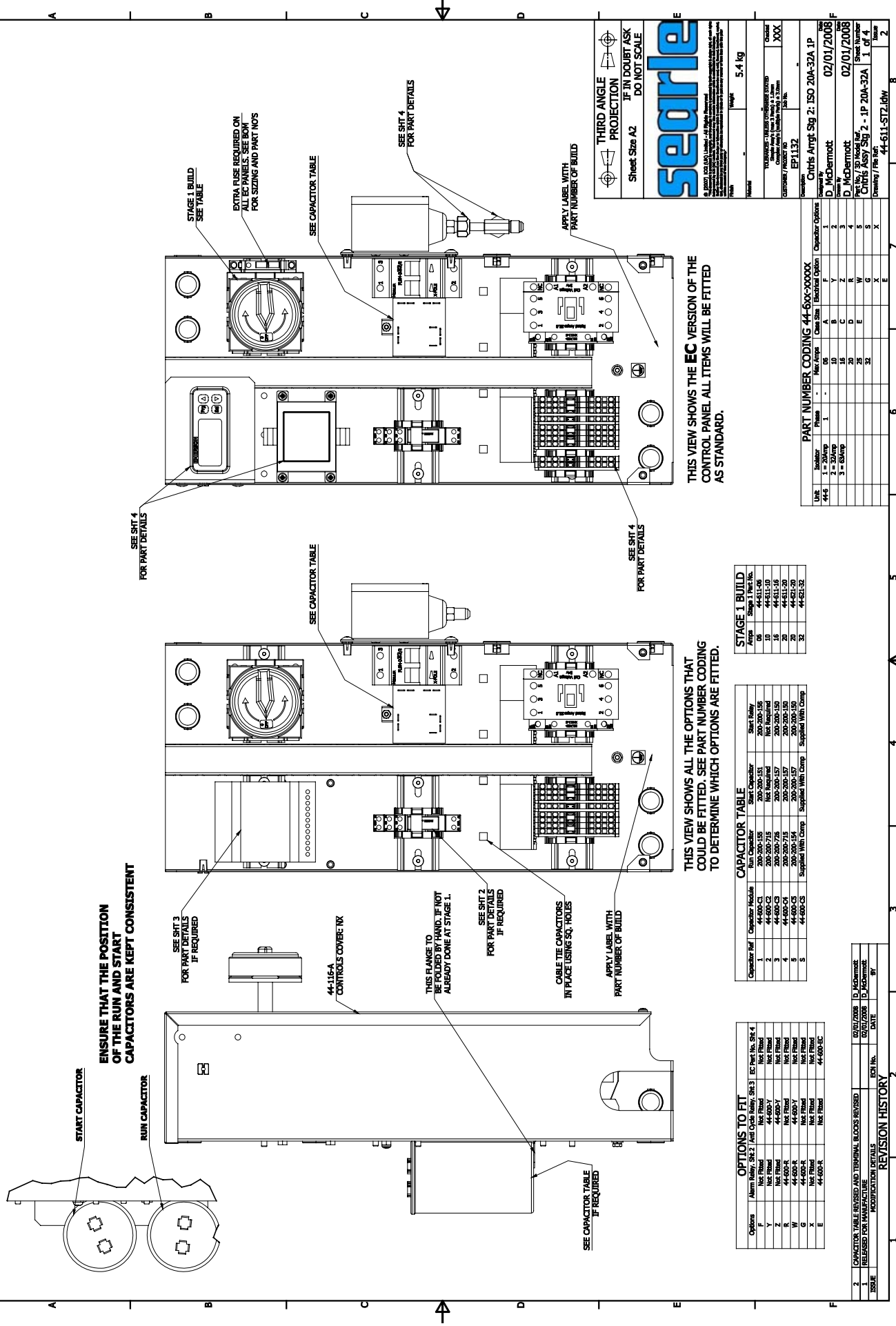

11n. NSQ/NSE 09 to 18 –3LX/S, 15 to 45 -3MX/S, -A/B/C 2/3 : 44-613-ST2 Layout Diagram

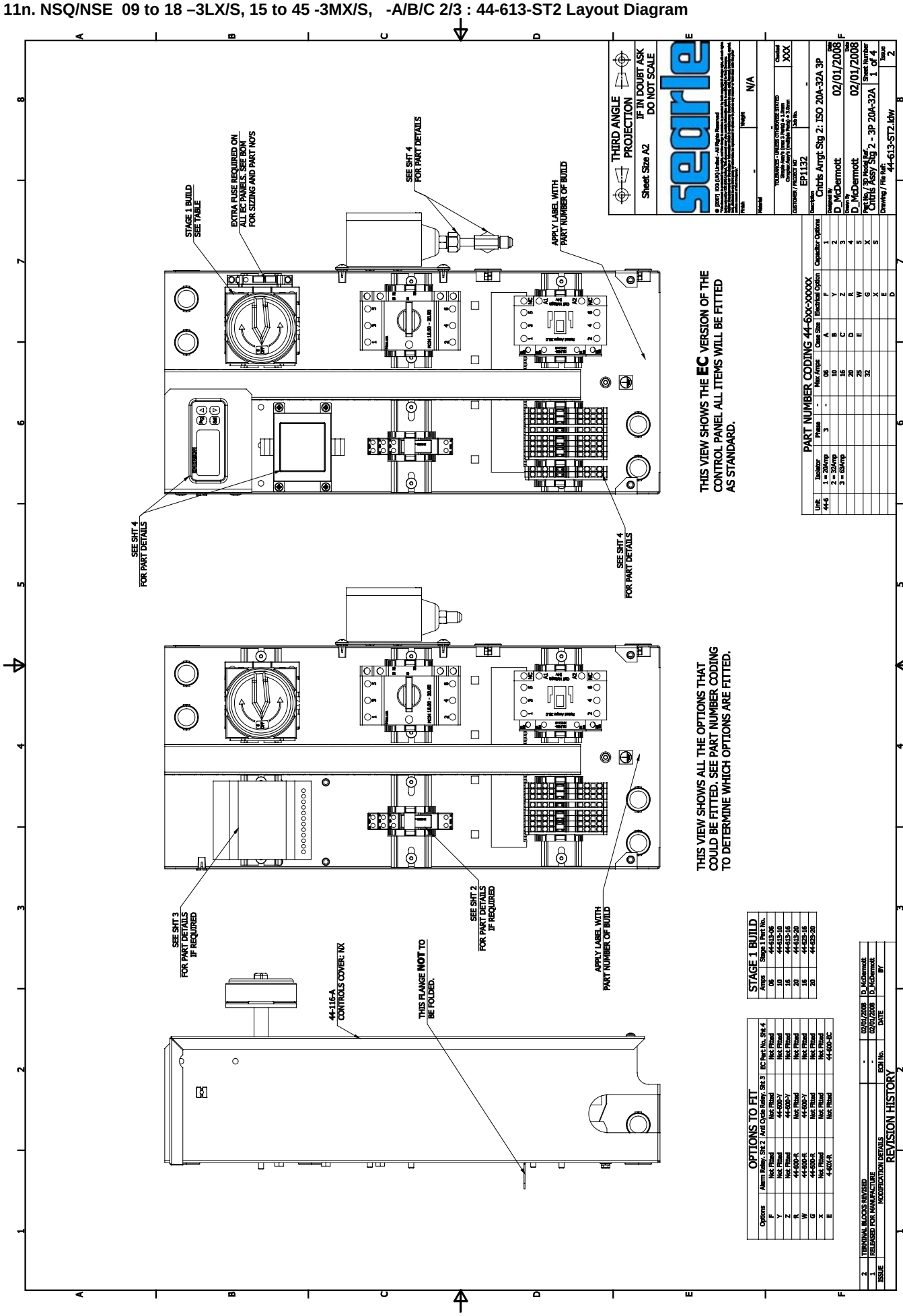

11o. NCQ/NCE 24 to 48 –3LX/S, 56 to 110 -3MX/S, -D/E 2/3 : 44-633-3-ST2 Layout Diagram

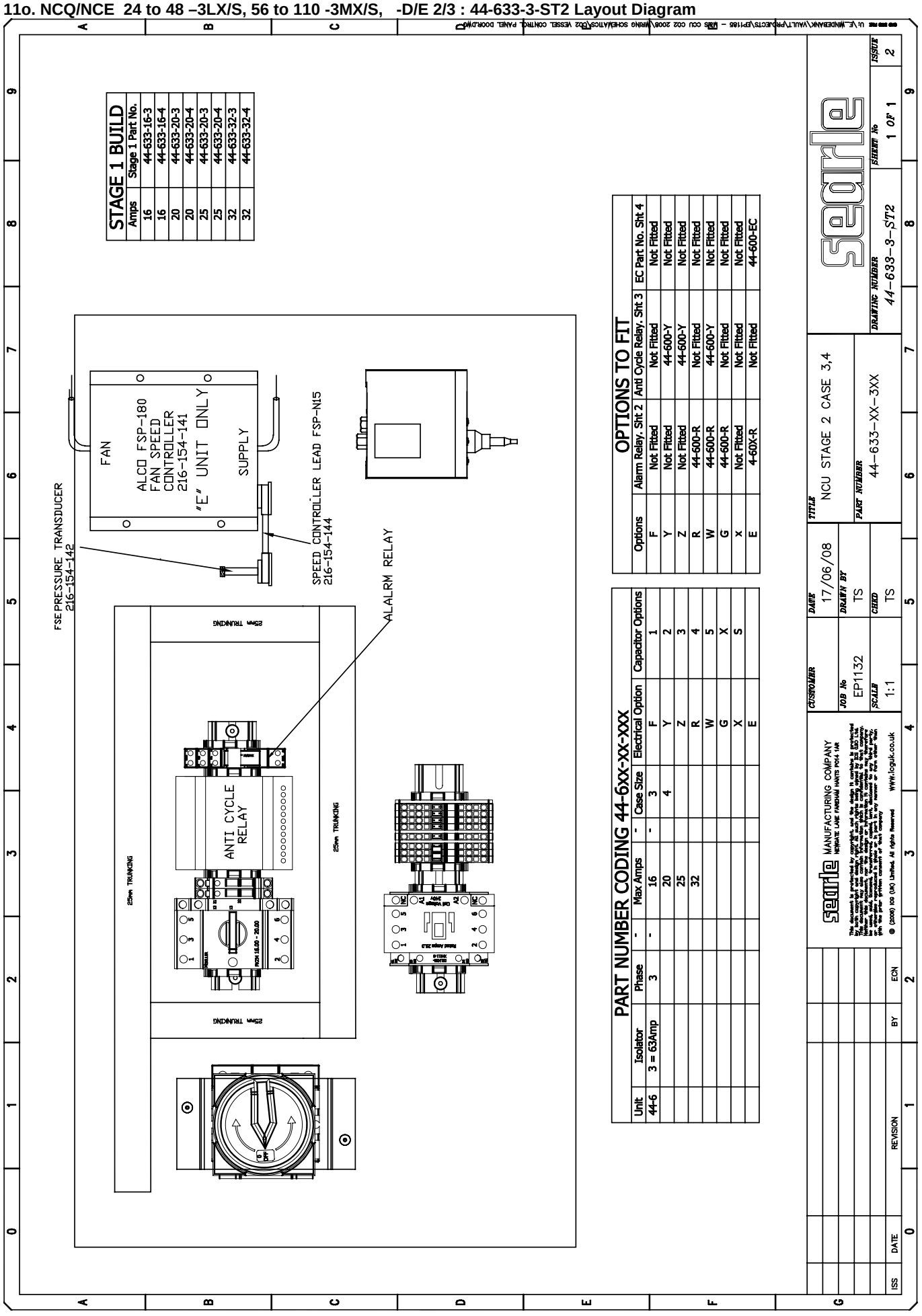

STAGE 1 BUILD

Amps	Stage 1 Part No.
16	44-633-16-3
16	44-633-16-4
20	44-633-20-3
20	44-633-20-4
25	44-633-20-3
25	44-633-20-4
32	44-633-32-3
32	44-633-32-4

OPTIONS TO FIT

Options	Alarm Relay, Sht 2	Anti Cycle Relay, Sht 3	EC Part No. Sht 4
F	Not Fitted	Not Fitted	Not Fitted
Y	Not Fitted	44-600-Y	Not Fitted
Z	Not Fitted	44-600-Y	Not Fitted
R	44-600-R	Not Fitted	Not Fitted
W	44-600-R	44-600-Y	Not Fitted
G	44-600-R	Not Fitted	Not Fitted
X	Not Fitted	Not Fitted	Not Fitted
E	4-60X-R	Not Fitted	44-600-EC

PART NUMBER CODING 44-6XX-XX-XXX

Unit	Isolator	Phase	-	Max Amps	-	Case Size	Electrical Option	Capacitor Options
44-6	3 = 63Amp	3	-	16	-	3	F	1
				20		4	Y	2
				25			Z	3
				32			R	4
							W	5
							G	X
							X	S
							E	

ISS	DATE	REVISION	BY	ECN

searle MANUFACTURING COMPANY
NEWGATE LANE FAREHAM HANTS PO14 1AR

This document is protected by copyright, and the design it contains is protected by both copyright and design right. All such rights being signed by ECN (UK) Ltd. This document may also contain information which is confidential to this company. Neither this document, nor the design or information it contains may, therefore, be used, sold, licensed, transferred, copied, lent, disclosed to any third party, or otherwise reproduced in whole or in part in any manner or form other than with the prior written consent of this company.
© (2008) ICQ (UK) Limited. All rights Reserved WWW.icquk.co.uk

CUSTOMER
JOB No EP1132
SCALE 1:1
DATE 17/06/08
DRAWN BY TS
CHKD TS

TITLE NCU STAGE 2 CASE 3,4
PART NUMBER 44-633-XX-3XX
DRAWING NUMBER 44-633-3-ST2
SHEET No 1 OF 1
ISSUE 2

12. DIMENSIONS
Case A, B & C

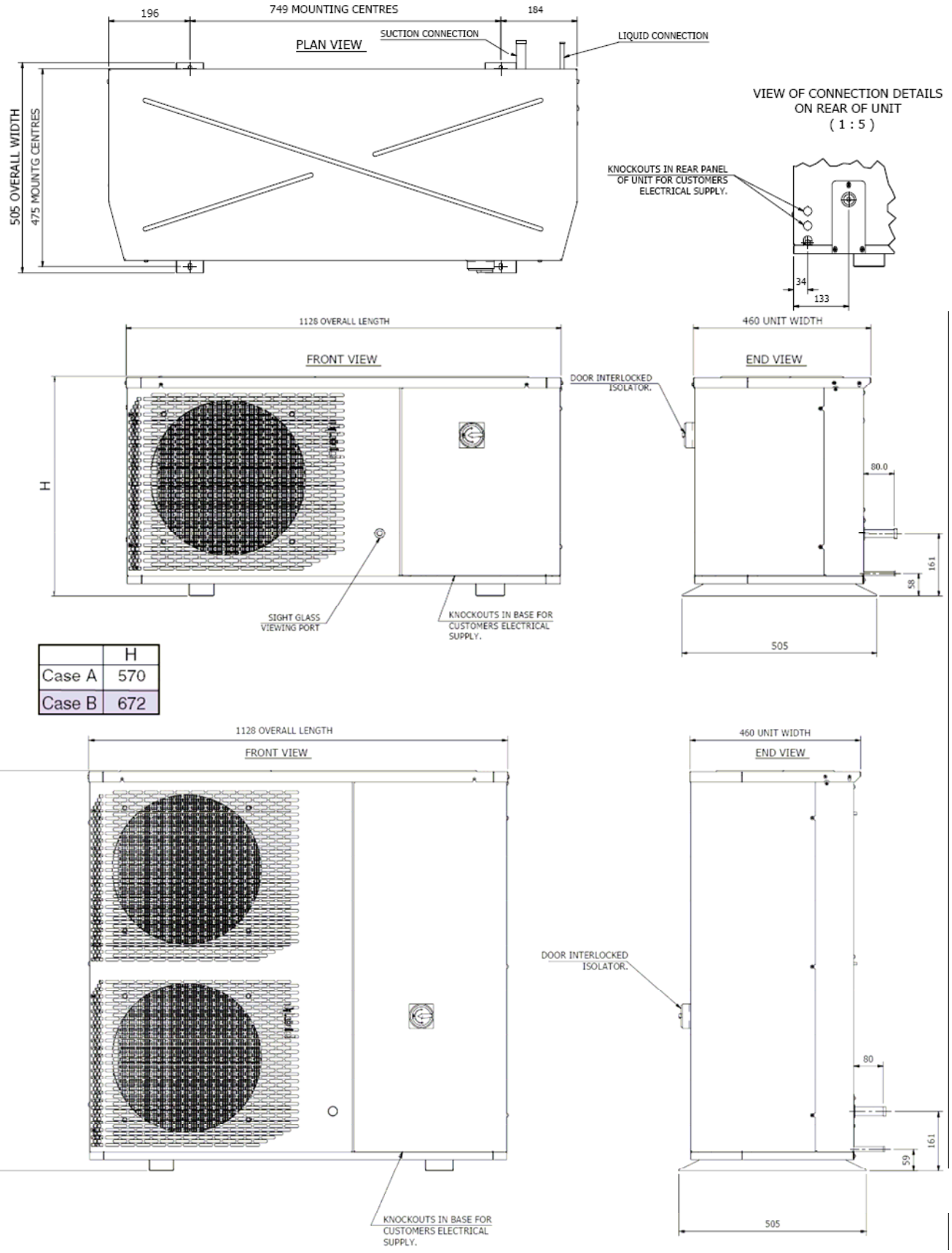

	H
Case A	570
Case B	672

Case D

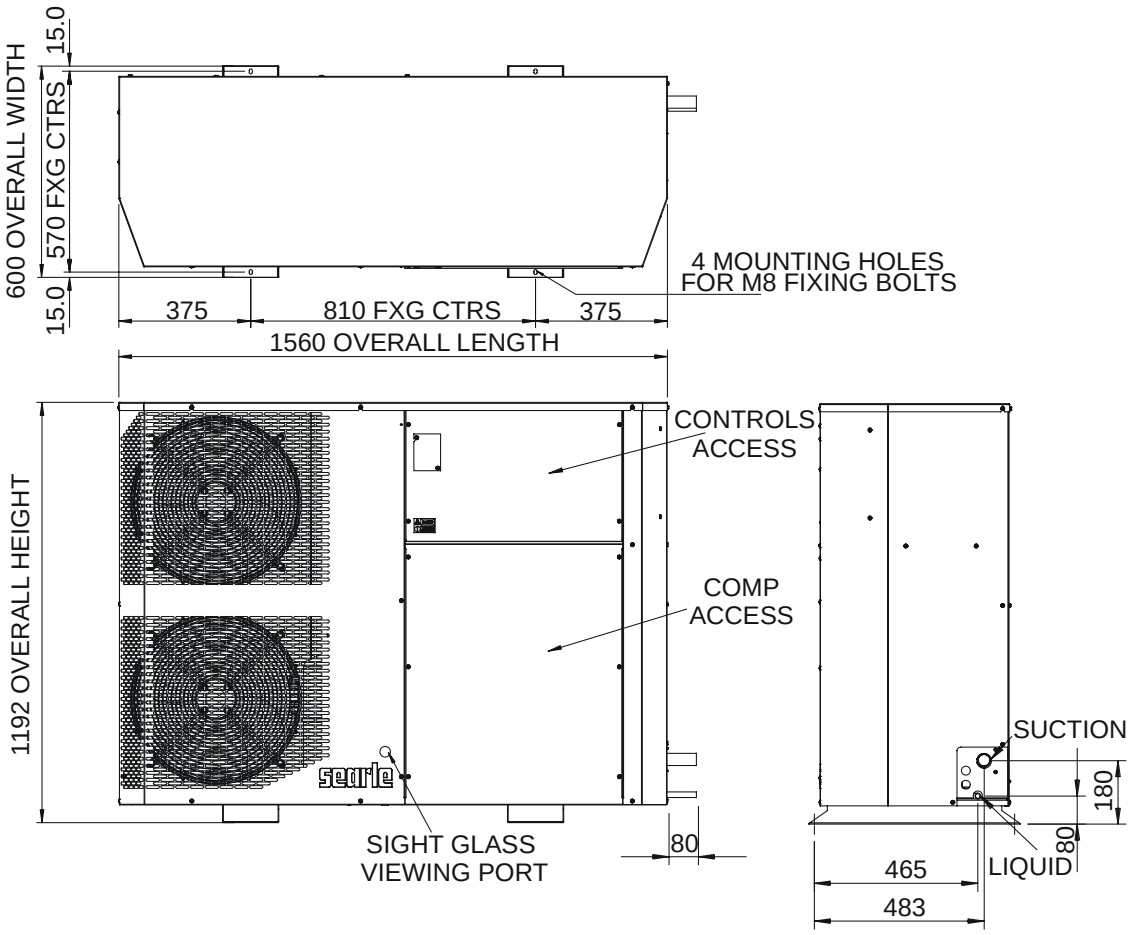
600 OVERALL WIDTH
15.0
570 FXG CTRS
15.0
4 MOUNTING HOLES
FOR M8 FIXING BOLTS
375
810 FXG CTRS
375
1560 OVERALL LENGTH
1192 OVERALL HEIGHT
CONTROLS
ACCESS
COMP
ACCESS
SUCTION
180
80
80
SIGHT GLASS
VIEWING PORT
465
483
LIQUID

Case E

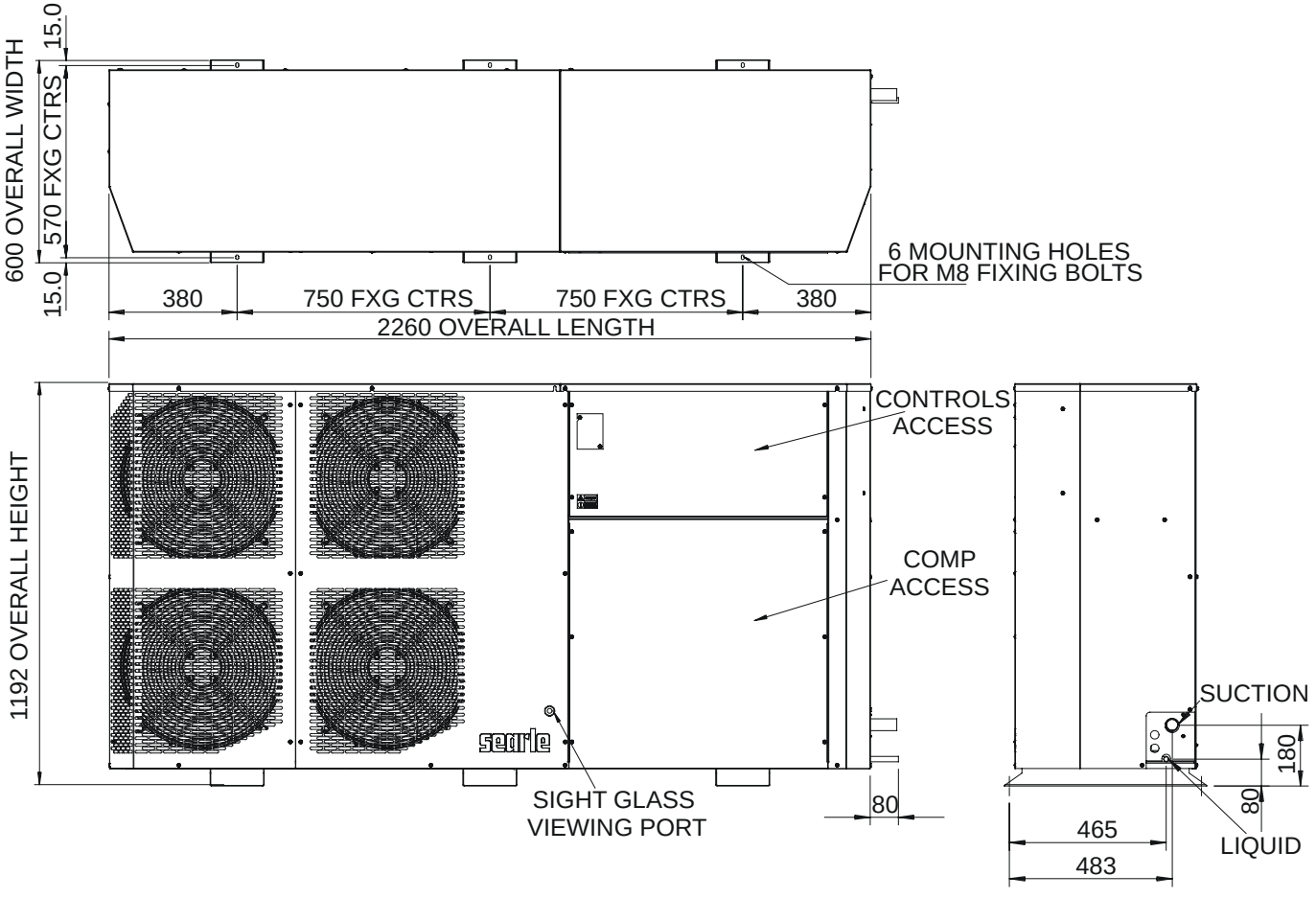
600 OVERALL WIDTH
15.0
570 FXG CTRS
15.0
6 MOUNTING HOLES
FOR M8 FIXING BOLTS
380
750 FXG CTRS
750 FXG CTRS
380
2260 OVERALL LENGTH
1192 OVERALL HEIGHT
CONTROLS
ACCESS
COMP
ACCESS
SUCTION
180
80
80
SIGHT GLASS
VIEWING PORT
465
483
LIQUID

13. SPECIFICATION SCQ / NSQ / NDQ / NCQ

Model	Compressor			Fans 230V/1ph/50Hz				Conn. Sizes		Liquid Receiver	Dry Weight	Dimensions			Fixing Ctrs		Case Size
	Power*	FLC	LRA	No. Fans	FLC	SC	Power	Suct.	Liquid.			Height	Width	Depth	Width	Depth	
	(kW)	3ph (A)	3ph (A)		(A)	(A)	(kW)	(")	(")	(L)	(kg)	(mm)	(mm)	(mm)	(mm)	(mm)	
SCQ13-1MX-A	0.8	6.6	22	1	0.57	1	0.11	1/2	3/8	2.8	70	573	1128	505	749	475	A
SCQ18-1MX-A	1.11	10.1	30	1	0.57	1	0.11	5/8	3/8	2.8	70	573	1128	505	749	475	A
SCQ27-1MX-A	1.68	15.4	31	1	0.57	1	0.11	5/8	3/8	2.8	70	573	1128	505	749	475	A
SCQ31-1MX-A	1.78	18.1	49	1	0.57	1	0.11	5/8	3/8	2.8	78	573	1128	505	749	475	A
SCQ7-1LX-A	0.93	7.5	29	1	0.57	1	0.11	1/2	3/8	2.8	70	573	1128	505	749	475	A
SCQ8-1LX-A	1.15	9.7	38	1	0.57	1	0.11	5/8	3/8	2.8	70	573	1128	505	749	475	A
SCQ9-3LX-A	1.40	3.9	25	1	0.57	1	0.11	5/8	3/8	2.8	78	573	1128	505	749	475	A
SCQ14-3LX-A	1.70	5.2	32	1	0.57	1	0.11	5/8	3/8	2.8	78	573	1128	505	749	475	A
NSQ15-3MX-A	1.95	4.9	26	1	0.7	1.4	0.13	3/8	7/8	6.2	123	573	1128	505	749	475	A
NSQ19-3MX-A	2.20	6.5	32	1	0.7	1.4	0.13	3/8	7/8	6.2	125	573	1128	505	749	475	A
NSQ21-3MX-B	2.55	7.2	40	1	0.84	1.8	0.12	1/2	7/8	6.2	131	675	1128	505	749	475	B
NSQ26-3MX-C	3.06	8.85	46	2	1.4	2.8	0.26	1/2	7/8	6.2	150	1083	1128	505	749	475	C
NSQ30-3MX-C	3.57	10.3	49.3	2	1.4	2.8	0.26	1/2	7/8	6.2	159	1083	1128	505	749	475	C
N**D**Q30-3MX-C	3.36	7.9	51.5	2	1.4	2.8	0.26	1/2	7/8	6.2	159	1083	1128	505	749	475	C
NSQ38-3MX-C	4.40	12.8	65.5	2	1.4	2.8	0.26	1/2	7/8	6.2	167	1083	1128	505	749	475	C
NSQ45-3MX-C	5.16	13.1	74	2	1.4	2.8	0.26	1/2	7/8	6.2	167	1083	1128	505	749	475	C
N**D**Q45-3MX-C	5.20	11.4	74	2	1.4	2.8	0.26	1/2	7/8	6.2	167	1083	1128	505	749	475	C
NCQ56-3MX-D	6.48	15.4	99	2	1.68	3.6	0.24	5/8	1 1/8	18.0	170	1194	1560	600	810	570	D
NCQ56-3MX-E	6.28	15.4	99	4	3.36	7.2	0.48	7/8	1 1/8	18.0	197	1194	2260	600	2x750	570	E
NCQ75-3MX-E	8.45	21.7	127	4	3.36	7.2	0.48	7/8	1 1/8	18.0	197	1194	2260	600	2x750	570	E
NCQ92-3MX-E	11.09	25.1	167	4	3.36	7.2	0.48	7/8	1 3/8	18.0	207	1194	2260	600	2x750	570	E
NCQ110-3MX-E	13.34	29.2	198	4	3.36	7.2	0.48	7/8	1 5/8	18.0	236	1194	2260	600	2x750	570	E
NSQ9-3LX-A	1.98	6.0	40	1	0.7	1.4	0.13	3/8	7/8	6.2	123	573	1128	505	749	475	A
NSQ11-3LX-A	2.43	7.0	46	1	0.7	1.4	0.13	3/8	7/8	6.2	124	573	1128	505	749	475	A
NSQ13-3LX-A	2.70	8.0	52	1	0.7	1.4	0.13	3/8	7/8	6.2	134	573	1128	505	749	475	A
NSQ13-3L**V**-C	3.07	8.0	51.5	2	1.4	2.8	0.26	1/2	7/8	6.2	168	1083	1128	505	749	475	C
NSQ15-3LX-A	3.20	10.0	64	1	0.7	1.4	0.13	3/8	7/8	6.2	138	573	1128	505	749	475	A
NSQ18-3LX-C	3.81	12.0	74	2	1.4	2.8	0.26	1/2	7/8	6.2	163	1083	1128	505	749	475	C
NSQ18-3L**V**-C	4.49	12.0	74	2	1.4	2.8	0.26	1/2	7/8	6.2	173	1083	1128	505	749	475	C
N**D**Q18-3L**V**-C	4.74	13.8	74	2	1.4	2.8	0.26	1/2	7/8	6.2	173	1083	1128	505	749	475	C
NCQ24-3LX-D	4.82	16.1	99	2	1.68	3.6	0.24	5/8	1 1/8	18.0	161	1194	1560	600	810	570	D
NCQ24-3L**V**-D	5.71	16.1	99	2	1.68	3.6	0.24	5/8	1 1/8	18.0	178	1194	1560	600	810	570	D
NCQ33-3LX-D	6.86	22.3	134	2	1.68	3.6	0.24	5/8	1 1/8	18.0	161	1194	1560	600	810	570	D
NCQ33-3L**V**-E	7.70	22.3	127	4	3.36	7.2	0.48	7/8	1 1/8	18.0	207	1194	2260	600	2x750	570	E
NCQ40-3LX-D	8.14	25.1	159	2	1.68	3.6	0.24	5/8	1 1/8	18.0	181	1194	1560	600	810	570	D
NCQ40-3L**V**-E	8.55	25.1	167	4	3.36	7.2	0.48	7/8	1 1/8	18.0	217	1194	2260	600	2x750	570	E
NCQ48-3LX-D	10.19	30.6	187	2	1.68	3.6	0.24	5/8	1 1/8	18.0	191	1194	1560	600	810	570	D
NCQ48-3L**V**-E	11.07	30.6	187	4	3.36	7.2	0.48	7/8	1 1/8	18.0	246	1194	2260	600	2x750	570	E

* Compressor Power based on nominal running conditions using R404A refrigerant for both compressors running. L units : -35°C SST, 32°C Amb, M units : -10°C SST, 32°C Amb. Compressor FLC based on Maximum run current at any condition, for both compressors. Compressor LRA is per compressor. Max Surge amps occur when second compressor starts on delay with the first compressor and fan(s) already running.

** Noise levels measured at 10m from the front air off side of the unit in free field conditions.

13. SPECIFICATION NSE NCE

Model	Combined Compressors			Fans 230V/1ph/50Hz			Conn. Sizes		Liquid Receiver	Dry Weight	Dimensions			Fixing Ctrs		Case Size
	Power*	FLC	LRA	No. Fans	FLC	SC	Power	Suct.	Liquid.		Height	Width	Depth	Width	Depth	
	(kW)	3ph (A)	3ph (A)		(A)	(A)	(kW)	(")	(")	(L)	(kg)	(mm)	(mm)	(mm)	(mm)	(mm)	
NSE15-3MX-A	1.92	4.9	26	1	1	2.12	0.19	3/8	7/8	6.2	119	573	1128	505	749	475	A
NSE19-3MX-A	2.26	6.5	32	1	1	2.12	0.19	3/8	7/8	6.2	122	573	1128	505	749	475	A
NSE21-3MX-A	2.63	7.2	40	1	1	2.12	0.19	3/8	7/8	6.2	126	573	1128	505	749	475	A
NSE26-3MX-B	3.02	8.85	46	1	1.55	3.2	0.25	1/2	7/8	6.2	135	675	1128	505	749	475	B
NSE30-3MX-B	3.52	10.3	49.3	1	1.55	3.2	0.25	1/2	7/8	6.2	144	675	1128	505	749	475	B
NSE38-3MX-B	4.55	12.8	65.5	1	1.55	3.2	0.25	1/2	7/8	6.2	145	675	1128	505	749	475	B
NSE45-3MX-B	5.36	13.1	74	1	1.55	3.2	0.25	1/2	7/8	6.2	148	675	1128	505	749	475	B
NCE56-3MX-D	6.20	15.4	99	2	3.1	6.4	0.50	5/8	1 1/8	18.0	160	1194	1560	600	810	570	D
NCE75-3MX-D	8.17	21.7	127	2	3.1	6.4	0.50	5/8	1 1/8	18.0	171	1194	1560	600	810	570	D
NCE92-3MX-E	10.3	25.1	167	4	6.1	12.8	1.00	7/8	1 1/8	18.0	207	1194	2260	600	2x750	570	E
NCE110-3MX-E	12.68	29.2	198	4	6.1	12.8	1.00	7/8	1 1/8	18.0	216	1194	2260	600	2x750	570	E
NSE9-3LX-A	1.98	6.0	40	1	1	2.12	0.19	3/8	7/8	6.2	123	573	1128	505	749	475	A
NSE11-3LX-A	2.41	6.5	32	1	1	2.12	0.19	3/8	7/8	6.2	122	573	1128	505	749	475	A
NSE13-3LX-A	2.65	8.0	52	1	1	2.12	0.19	3/8	7/8	6.2	134	573	1128	505	749	475	A
NSE15-3LX-A	3.26	10.0	64	1	1	2.12	0.19	3/8	7/8	6.2	135	573	1128	505	749	475	A
NSE18-3LX-A	3.9	12.0	74	1	1	2.12	0.19	3/8	7/8	6.2	141	573	1128	505	749	475	A
NCE24-3LX-D	4.82	16.1	99	2	3.1	6.4	0.50	5/8	1 1/8	18.0	161	1194	1560	600	810	570	D
NCE33-3LX-D	6.86	22.3	134	2	3.1	6.4	0.50	5/8	1 1/8	18.0	161	1194	1560	600	810	570	D
NCE40-3LX-D	8.35	25.1	159	2	3.1	6.4	0.50	5/8	1 1/8	18.0	171	1194	1560	600	810	570	D
NCE48-3LX-D	10.49	30.6	187	2	3.1	6.4	0.50	5/8	1 1/8	18.0	181	1194	1560	600	810	570	D

* Compressor Power based on nominal running conditions using R404A refrigerant for both compressors running. L units : -35°C SST, 32°C Amb, M units : -10°C SST, 32°C Amb. Compressor FLC based on Maximum run current at any condition, for both compressors. Compressor LRA is per compressor. Max Surge amps occur when second compressor starts on delay with the first compressor and fan(s) already running.
** Noise levels measured at 10m from the front air off side of the unit in free field conditions.

GEA Refrigeration

GEA Searle Ltd

20 Davis Way, Newgate Lane, Fareham, PO14 1AR
Tel. +44 (0) 1329 823344, Fax +44 (0) 1329 821242
sales@searle.co.uk, www.searle.co.uk

Searle

Number 272-000-310 Issue Oct 08/02