

GEA Searle Condensing Unit Range

Top-level engineering solutions









GEA Searle Condensing units

Engineering at its best

GEA new range of Condensing units means you've more choice than ever before, comprising both Scroll and Reciprocating Compressor units, arranged in single and multiple compressor configurations, with varying condenser and control options.

The wide range is suitable for high and low temperature refrigeration and air conditioning applications. The fansets chosen for the ranges offers the best combined performance for air volume, noise and efficiency available in the refrigeration and air conditioning industry. In addition to the conventional AC motors, customers can select the latest EC technology, offering high efficiency and speed controllability for situations traditionally controlled by independent systems. While EC motors are new to this market, GEA Searle has been using them in specialised applications for a number of years.

Casework

Our casework is aesthetically designed to ensure the minimum fixings visible on the outer casing and provide a clean finish. All our casework is manufactured from corrosion resistant pre-galvanised steel sheets, polyester powder coated and oven baked in RAL7036 grey finish. This finish protects surfaces and cut edges and ensure long lasting protection.

Pipework

GEA Condensing units are supplied as standard with a complete pipework arrangements, incorporating compressor pipework, liquid receiver, liquid filter drier, sight glass, and schraeder access point. Low temperature scroll units also incorporate compressor liquid injection.

Connections

All models are supplied with the standard imperial size copper suction and liquid line stubs, exiting on the right hand side of the unit, ready for brazing. Connection sizes are selected for the unit duty, and may be adapted to suit the on site requirements.

Fins and Coils

Fins are manufactured from high quality materials ensuring a quality product without compromise. GEA has developed a unique fin design specifically for our range of condensing units. This fin has been tested extensively in GEA Research and Development facility and ensures a greater efficiency. Standard coils are manufactured from internally grooved copper tubes, which are mechanically expanded into fully collared holes in vinyl coated aluminium fins. This ensures an effective and permanent bond between the tube and the fin, maximising heat transfer characteristics.

Control Options

GEA Condensing units are supplied as standard with a complete control package, incorporating mains isolator, compressor motor starter,overloads or MCB's for single phase models, compressor contactors, high and low pressure switches, control circuit protections and compressor crankcase heaters. Depending on the model range additional modulers can be specified for factory fitting. The control options include:

- Compressor anti cycle timer/delay on timers
- Alarm relays
- Fan speed/head pressure controller
- Fan cycling controller
- EC fan control
- Compressor sequencing controls, with options for TCP/IP network communication
- Backup control systems for compressor and condenser fans

Condensing Unit Features

GEA Searle Condensing Units are supplied as standard with a complete controlpackage, incorporating:

- Single, Twin and Multiple Compressor Condensing Units
- Scroll, Reciprocating and Digital Compressor
- Standard product range or configure to customer specification
- Mains Isolator and Controls Circuit protection
- Compressor Motor Starter/Overloads or MCB's for single phase models
- Compressor Contactors
- High and Low pressure switches
- Fitted pressure relief valve (PRV)
- Compressor Crankcase Heaters. Depending on the mode range additional control modules can be specified for factory fitting.

NSQ - NCQ Condensing unit

Engineering for a better world



- Vinyl coated aluminium coil as standard
- Condenser fanset
- Motor starter
- Compressor contactor
- LP switch.

Options

- Oil separator, EC Fans and controller, Wall bracket, Vandal Proof Cage, Condenser coils with copper fin

GEA Searle NSQ scroll condensing units are an ideal partner for the catering and food retail industries including food preparation areas, cold storage facilities, convenience stores, garage forecourt shops and supermarkets.The GEA Searle NSQ range comprises eleven medium temperature and nine low temperature base models covering a duty range of 1.5kW to 47kW on R404A/ R507 and R407C.

Different options are available for each base unit to match the condenser and fanset selection to exact requirements. The NSQ standard units are to a high specification including vinyl fin, 6 pole fansets and acoustic insulation. Noise levels range from 28 dB(A) for the smallest single fan unit fitted with fan speed control operating at minimum speed to 56 dB(A) for the largest four-fan unit operating at maximum fan speed.

The fully weatherproofed units are supplied prewired and ready to install. All models are suitable for floor or wall mounting with the optional wall bracket kit. The smaller capacity units may be wall mounted or, where floor space is at a premium, double stacked. Details of available wall brackets, stacking frames and vandal proof guards can be obtained from your Searle supplier.

Standard Features & Benefits

CE Marked Unit, Compliant scroll compressor, Compressor motor starter with short circuit and overload protection, Compressor contactor, Copper tube coil with vinyl-coated aluminium fins, Fully-wired control panel with Mains Isolator, Compressor with crankcase heater, Sight glass and filter, HP/LP switches auto reset, Pressure activated fan speed control kit, Start delay and anti-recycle timer, Volt-free contact for alarm signal, Acoustic Insulation Kit.

NSQ - Condensing units



1	2	3	4		5	6												
N	S	Q	45	-	3	M	X	-	C	3	F	I	-	P	V			
							7		8	9	10	11		12	13			

1. Range:	N	8. Coil/Case:	A, B, C, D, E
2. Case size:	S = Case A, B, C, C = Case D, E	9. Rows:	2,3
3. Unit Type:	Q = Quiet (6pl fans), E = Economy (4pl fans)	10. Control package:	F = Fan speed controller, W = Fan speedcontroller + Anti cycle timer + Alarm relay T = Anti cycle timer + Alarm relay, E = Electronic Controller + EC Fans
4. Compressor:	eg. 45 = ZB45, 18 = ZF18		
5. Phase:	1 = 1 Phase, 3 = 3 Phase		
6. Temperature:	M = Medium, L = Low	11. Acoustic insulation:	I = Insulation
7. Oil separator:	S = Oil separator, X = No oil separator, V = EVI Compressor	12. Fin material:	C = Copper, V = Vinyl coated aluminium
		13. Opitional Extras:	O = Evaporator contactor, S = Solenoid valve, G = Evap. Contactor + Sol. valve

NSQ - Features



1. Vinyl coated aluminium coil as standard
2. Condenser fanset
3. Motor starter
4. Compressor contactor
5. LP switch
6. Anti recycle timer alarm relay
7. Acoustic insulation
8. Compressor

NSQ 'L' Range
Low Temperature

R404A

Case A



(H) 570 x (W) 1128 x (D) 505

Case C



(H) 1078 x (W) 1128 x (D) 505

Model	Ambient (°C)	Saturated Suction Temperature (°C)						
		-40	-35	-30	-25	-20	-15	-10
NSQ9-3LX-A	27	1634	2074	2514	3058	3603	4290	4977
	32	1531	1940	2349	2851	3352	3990	4627
	35	1469	1859	2250	2726	3202	3810	4417
	43	1303	1644	1985	2394	2802	3329	3857
NSQ11-3LX-A	27	2025	2548	3071	3688	4305	5072	5839
	32	1887	2373	2859	3429	4000	5705	5411
	35	1804	2268	2731	3274	3816	4485	5154
	43	1583	1988	2392	2860	3328	3899	-
NSQ13-3LX-A	27	2271	2864	3458	4162	4867	5708	6549
	32	2138	2668	3199	3842	4485	5269	6052
	35	2057	2550	3043	3650	4257	5005	5754
	43	1844	2236	-	-	-	-	-
NSQ15-3LX-A	27	2802	3522	4242	5109	5976	6985	7993
	32	2612	3278	3943	4727	5510	6434	7359
	35	2498	3131	3764	4497	5230	6104	6978
	43	2195	2740	-	-	-	-	-
NSQ18-3LX-C	27	3548	4468	5388	6559	7731	9159	10588
	32	3311	4165	5019	6098	7178	8495	9812
	35	3169	3983	4797	5822	6846	8096	9346
	43	2791	3498	4206	5084	5962	7033	8105

NCQ 'L' Range
Low Temperature

Case D



(H) 1192 x (W) 1560 x (D) 600

NCQ24-3LX-D	27	4340	5541	6742	8219	9695	11525	13355
	32	4028	5162	6297	7666	9035	10721	12408
	35	3840	4935	6030	7334	8639	10239	11839
	43	3339	4328	5317	6450	7582	8953	10324
NCQ33-3LX-D	27	5164	7063	8963	10866	12770	14898	17026
	32	4828	6558	8287	10032	11777	13758	15740
	35	4627	6254	7881	9531	11180	13074	14968
	43	4090	5445	6800	8195	9591	11251	-
NCQ40-3LX-D	27	7133	9043	10953	13186	15419	18044	20668
	32	6627	8403	10179	12226	14274	16674	19074
	35	6324	8019	9714	11650	13587	15853	18118
	43	5514	6994	-	-	-	-	-
NCQ48-3LX-D	27	7836	10036	12236	14592	16948	19594	22239
	32	7238	9239	11241	13387	15533	17981	20428
	35	6879	8761	10644	12664	14684	17013	19342
	43	5921	-	-	-	-	-	-

Performance data in Watts rated at 20 °C Return Gas Temperature, oK Sub Cooling

Compressor		Case Size Drawing	Fansets (230V/1ph/50Hz)			Connection Sizes		Liquid Receiver	Dry Weight	Sound Levels	
FLC	LRA		Number of Fans and Diameter	FLC	LRA	Suction	Liquid			dB(A)*	
(A)	(A)			(A)	(A)	inches	inches	(L)	(kg)	Max*	Min*
6.0	40	A	1 x 400 6pl	7.0	1.4	7/8"	3/8"	6.2	123	40	28
7.0	46	A	1 x 400 6pl	7.0	1.4	7/8"	3/8"	6.2	124	40	29
8.0	52	A	1 x 400 6pl	7.0	1.4	7/8"	3/8"	6.2	134	41	33
10.0	64	A	1 x 400 6pl	7.0	1.4	7/8"	3/8"	6.2	138	42	39
12.0	74	C	2 x 400 6pl	1.4	2.8	7/8"	1/2"	6.2	163	42	36
16.1	99	D	2 x 450 6pl	2.0	3.6	1 3/8"	5/8"	18.0	161	46	45
23.0	134	D	2 x 450 6pl	2.0	3.6	1 3/8"	5/8"	18.0	162	46	45
26.0	159	D	2 x 450 6pl	2.0	3.6	1 3/8"	5/8"	18.0	182	46	45
30.6	187	D	2 x 450 6pl	2.0	3.6	1 3/8"	5/8"	18.0	192	46	45

* Noise levels in dB(A) at 10m from the front face of the unit, min. noise levels with fan speed control at minimum speed

NSQ 'L' EVI Range

R404A

Low Temperature

Case C



(H) 1078 x (W) 1128 x (D) 505

Model Refrigeration Capacity	Ambient (°C)	Saturated Suction Temperature (°C)						
		-40	-35	-30	-25	-20	-15	-10
NSQ13-3LV-C	27	3355	4228	5100	6197	7294	8718	10142
	32	3206	4074	4942	6033	7124	8555	9987
	35	3116	3982	4847	5935	7022	8458	9893
	43	2878	3736	4594	5672	6749	8197	9645
NSQ18-3LV-C	27	4957	6072	7186	8607	10028	11841	13653
	32	4920	5982	7044	8405	9766	11530	13295
	35	4898	5928	6958	8283	9608	11344	13079
	43	4838	5784	6730	7959	9188	10847	-

NCQ 'L' EVI Range

Low Temperature

Case D



(H) 1192 x (W) 1560 x (D) 600

Case E



(H) 1192 x (W) 2260 x (D) 600

NCQ24-3LV-D	27	5834	7393	8952	10786	12620	14781	16942
	32	5682	7236	8789	10562	12335	14393	16451
	35	5591	7141	8692	10428	11859	14239	16619
	43	5348	6890	8431	10070	11402	13593	15784
NCQ33-3LV-E	27	8222	10269	12316	14885	17454	20651	23849
	32	8106	10068	12030	14481	16932	19992	23053
	35	8036	9947	11859	14239	16619	19597	22575
	43	7849	9626	11402	13593	15784	18543	21301
NCQ40-3LV-E	27	9157	12206	15254	18700	22146	25980	29815
	32	8582	11688	14794	18173	21552	25227	28902
	35	8237	11378	14518	17857	21196	24775	28354
	43	7316	10549	13783	17015	20247	23570	-
NCQ48-3LV-E	27	12181	15221	18262	21811	25361	29421	33480
	32	11777	14785	17793	21217	24640	28530	32419
	35	11535	14524	17512	20860	24208	27995	31782
	43	10889	13826	16762	19909	23055	26570	-

Performance data in Watts rated at 20 °C Return Gas Temperature, 0K Sub Cooling

Note:

EVI units utilise enhanced vapour injection compressors and are fitted with oil separators,fan speed controller & acoustic insulation as standard.

Compressor		Case Size Drawing	Fansets (230V/1ph/50Hz)			Connection Sizes		Liquid Receiver	Dry Weight	Sound Levels	
FLC	LRA		Number of Fans and Diameter	FLC	LRA	Suction	Liquid			dB(A)*	
(A)	(A)			(A)	(A)	inches	inches	(L)	(kg)	Max*	Min*
8.0	51.5	C	2 x 400 6pl	1.4	2.8	7/8"	1/2"	6.2	168	42	36
12.0	74	C	2 x 400 6pl	1.4	2.8	7/8"	1/2"	6.2	174	42	36
16.1	99	D	2 x 450 6pl	2.0	3.5	1 3/8"	5/8"	18.0	179	46	45
22.3	127	E	2 x 450 6pl	4.0	7.2	1 3/8"	7/8"	18.0	208	47	45
25.1	167	E	2 x 450 6pl	4.0	7.2	1 3/8"	7/8"	18.0	218	47	45
30.6	198	E	2 x 450 6pl	4.0	7.2	1 5/8"	7/8"	18.0	247	47	45

* Noise levels in dB(A) at 10m from the front face of the unit, min. noise levels with fan speed control at minimum speed

NSQ 'M' Range Standard noise

R404A

Medium Temperature

Case A



(H) 570 x (W) 1128 x (D) 505

Case B



(H) 545 x (W) 1306 x (D) 487

Case C



(H) 1078 x (W) 1128 x (D) 505

Model Refrigeration Capacity	Ambient (°C)	Saturated Suction Temperature (°C)						
		-20	-15	-10	-5	0	5	10
NSQ15-1MX-A	27	2553	3137	3721	4408	5095	5876	6658
	32	2295	2843	3391	4031	4672	5388	6104
NSQ15-3MX-A	35	2140	2666	3192	3805	4418	5095	5772
	43	1726	2195	2663	3202	3742	4315	4887
NSQ19-1MX-A	27	3244	3922	4599	5438	6278	7266	8254
	32	2995	3619	4244	5029	5815	6734	7652
NSQ19-3MX-A	35	2845	3438	4031	4784	5538	6415	7291
	43	2445	2954	3462	4130	4798	5563	6328
NSQ21-1MX-B	27	3981	4815	5649	6683	7718	8927	10135
	32	3684	4452	5221	6181	7141	8265	9389
NSQ21-3MX-B	35	3505	4234	4964	5879	6795	7868	8941
	43	3030	3654	4279	5075	5871	6809	7747
NSQ26-1MX-C	27	4650	5633	6616	7852	9088	10556	12024
	32	4292	5209	6126	7276	8425	9797	11169
NSQ26-3MX-C	35	4077	4954	5832	6930	8028	9342	10656
	43	3503	4276	5048	6008	6967	8127	9287
NSQ30-3MX-C	27	5365	6484	7603	8986	10369	11994	13618
	32	4936	5974	7013	8304	9596	11129	12662
	35	4678	5669	6660	7896	9132	10610	12088
	43	3990	4853	5717	6805	7894	9225	10557
NSQ38-3MX-C	27	6650	8045	9439	11137	12834	14826	16818
	32	6135	7428	8721	10305	11889	13749	15608
	35	5826	7058	8290	9806	11323	13103	14882
	43	5002	6072	7141	8476	9812	11379	12947
NSQ45-3MX-C	27	7657	9220	10783	12652	14520	16654	18788
	32	7059	8497	9936	11670	13404	15383	17362
	35	6700	8064	9427	11080	12734	14620	16507
	43	5743	6907	8071	9590	10947	-	-

NCQ 'M' Range Standard noise

Medium Temperature

Case D



(H) 1192 x (W) 1560 x (D) 600

Case E

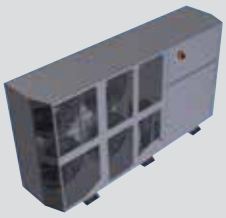

(H) 1192 x (W) 2260 x (D) 600

NCQ50-3MX-D	27	8107	10597	13087	15499	17911	20698	23484
	32	7090	9575	12059	14347	16635	19224	21812
	35	6479	8961	11442	13656	15869	18339	20810
	43	4851	7324	9797	11812	13827	15981	18135
NCQ58-3MX-E	27	9725	12523	15322	18265	21208	24667	28125
	32	8732	11466	14200	16979	19758	22986	26213
	35	8137	10831	13526	16207	18888	21977	25066
	43	6548	9139	11731	14149	16567	19287	22007
NCQ66-3MX-E	27	10990	14039	17087	20242	23398	27073	30749
	32	10038	12946	15854	18777	21701	25127	28552
	35	9466	12290	15113	17898	20683	23958	27234
	43	7942	10541	13140	15554	17968	20843	23719
NCQ76-3MX-E	27	12724	16126	19528	23137	26746	30832	34918
	32	11564	14861	18157	21500	24842	28617	32391
	35	10868	14101	17335	20517	23700	27287	30875
	43	9012	12077	15142	17898	20653	23742	26831
NCQ95-3MX-E	27	14745	18752	22760	26970	31181	35643	40105
	32	13121	17088	21055	24942	28829	32983	37136
	35	12147	16089	20032	23725	27418	31386	35355
	43	9549	13427	17304	20480	23655	-	-
NCQ114-3MX-E	27	18040	22610	27179	32095	37010	42541	48073
	32	15764	20329	24893	29547	34200	39413	44626
	35	14399	18960	23521	28018	32514	37536	42558
	43	10757	15310	19863	23940	28018	-	-

Performance data in Watts rated at 20°C Return Gas Temperature, 0K Sub Cooling

Compressor		Case Size Drawing	Fansets (230V/1ph/50Hz)			Connection Sizes		Liquid Receiver	Dry Weight	Sound Levels	
FLC	LRA		Number of Fans and Diameter	FLC	LRA	Suction	Liquid			dB(A)*	
(A)	(A)			(A)	(A)	inches	inches	(L)	(kg)	Max*	Min*
10.5 4.9	50 26	A	1 x 400 6pl	0.7	1.4	7/8"	3/8"	6.2	106	40	28
12.8 6.5	61 32	A	1 x 400 6pl	0.7	1.4	7/8"	3/8"	6.2	111	41	28
16.4 7.2	82 40	B	1 x 450 6pl	1.0	1.8	7/8"	1/2"	6.2	128	41	28
18.0 8.9	97 64	C	2 x 400 6pl	1.4	2.8	7/8"	1/2"	6.2	150	41	31
10.3	49	C	2 x 400 6pl	1.4	2.8	7/8"	1/2"	6.2	159	41	33
12.8	65	C	2 x 400 6pl	1.4	2.8	7/8"	1/2"	6.2	166	41	33
13.1	74	C	2 x 400 6pl	1.4	2.8	7/8"	1/2"	6.2	168	41	33
14.6	100	D	2 x 450 6pl	2.0	3.6	1 1/8"	5/8"	18.0	234	42	38
15.4	95	E	4 x 450 6pl	4.0	7.2	1 3/8"	7/8"	18.0	276	44	39
17.5	111	E	4 x 450 6pl	4.0	7.2	1 3/8"	7/8"	18.0	276	44	39
20.4	118	E	4 x 450 6pl	4.0	7.2	1 3/8"	7/8"	18.0	289	44	39
28.2	140	E	4 x 450 6pl	4.0	7.2	1 5/8"	5/8"	18.0	293	44	39
33.3	174	E	4 x 450 6pl	4.0	7.2	1 5/8"	5/8"	18.0	309	46	44

* Noise levels in dB(A) at 10m from the front face of the unit, min. noise levels with fan speed control at minimum speed

N2CQ Condensing Unit

engineering for a better world



GEA Searle N2CQ twin scroll compressor condensing units compliment the NSQ range by extending the range through the use of two scroll compressors. The twin compressor configuration provides capacity control in steps of 100% and 50% to suit projects with a variable refrigeration load. This makes the N2CQ the flexible option for larger convenience stores, garage forecourts and small supermarkets. The N2CQ range comprises seven low temperature and eight medium temperature models using refrigerants R404A/R507 and R407C. The low temperature models (-40 °C to -10°C) cover a capacity range of 4.03 kW to 19.6 kW while the medium temperature units (-20°C to +10°C) range from 7.27 kW to 23.28 kW.

- Twin scroll compressors including contactors (with liquid injection and oil management system on low temperature 'LS' models)
- Volt-free contact for alarm signal (relay)
- HP/LP switch auto reset
- Sight glass and filter drier
- Rotalock service valves on compressors and receiver
- Oil separator
- Electronic Step Controller
- (Optional) Copper fin coil, Fully crated packing

N2CQ Standard Features

CE Marked Unit, weatherproof housing with separate, acoustically lined compressor compartment, Concealed, low noise condenser fans, Copper tube coil with vinyl-coated aluminium fins, Capacity control 100-50-0%, Fully-wired control panel with Mains Isolator, Low ambient fan speed control (FSC), Liquid receiver with fitted pressure relief valve, Compressor motor starter with short circuit and overload protection.

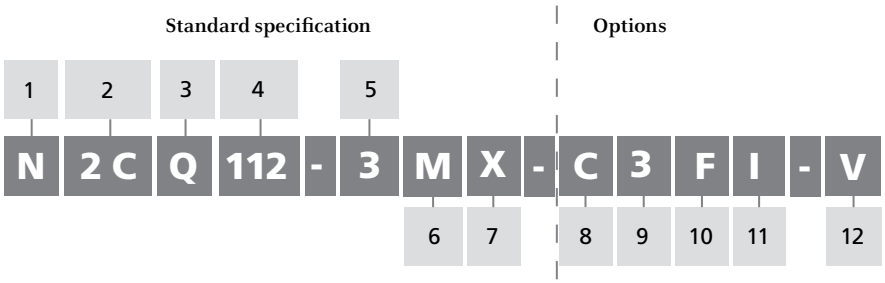

1. Range:	N
2. Comp Technology:	2C = Twin Scroll compressor
3. Unit Type:	Q = Quiet (6pl)
4. Compressor:	eg. 112 =2xZB56, 22 = 2xZF11
5. Phase:	3 = 3 Phase
6. Temperature:	M = Medium, L = Low
7. Oil separator:	S = Oil separator, X = No oil separator, V = EVI Compressor
8. Coil/Case:	D, E
9. Rows:	2,3
10. Control package:	F = Fan speed controller, W = Fan speedcontroller + Anti cycle timer + Alarm relay T = Anti cycle timer + Alarm relay, E = Elec tronic Controller + EC Fans
11. Acoustic insulation:	I = Insulation
12. Opitional Extras:	V = Vinyl coated aluminium, C = Copper fin, O = Evaporator contactor, S = Solenoid valve, G = Evap. Contactor + Sol. valve

N2CQ - Condensing units



N2CQ - Features

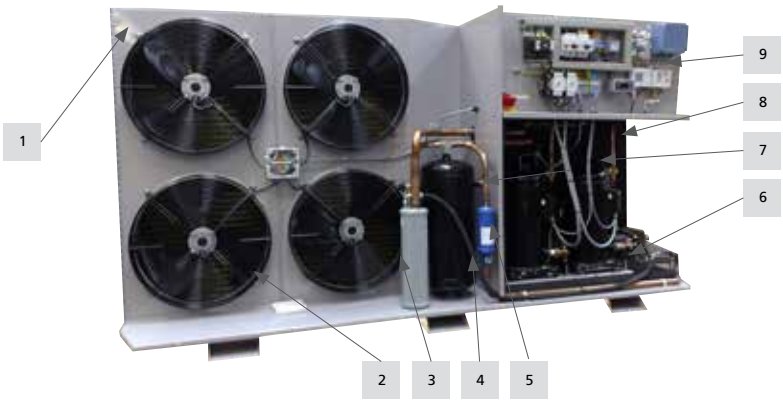

1. Vinyl coated condenser coil
2. Condenser fanset
3. Oil separator
4. Liquid receiver with fitted PRV
5. Filter Drier/sightglass
6. HP switch auto re-set
7. Compressor
8. Acoustic insulation
9. Control panel

1. Main isolation
2. Compressor contactor's
3. Alarm terminals
4. Lp switch auto re-set
5. pressure actuated fan speed controller
6. Main controller with compressor anti - cycle protection (option)
7. Overload/manual motor starter

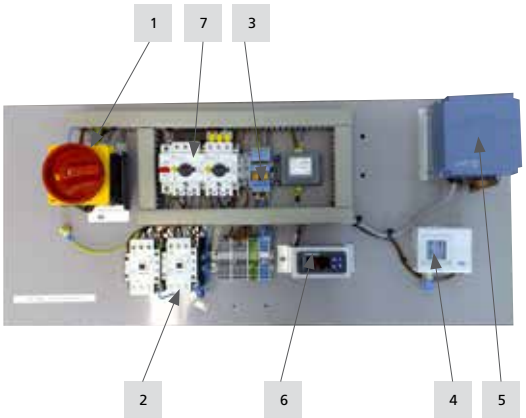

N2CQ 'L' Range Low noise twin compressor

R404A

Low Temperature

Case D



(H) 1192 x (W) 1560 x (D) 600

Case E



(H) 1192 x (W) 2260 x (D) 600

Model	Ambient (°C)	Saturated Suction Temperature (°C)						
		-40	-35	-30	-25	-20	-15	-10
N2CQ18-3LS-D	27	3362	4293	5225	6413	7601	9143	10685
	32	3157	4026	4895	5994	7093	8528	9964
	35	3034	3865	4697	5742	6788	8159	9531
	43	2706	3437	4168	5072	5975	7176	8376
N2CQ22-3LS-D	27	4207	5331	6456	7829	9202	10982	12762
	32	3932	4981	6030	7305	8580	10227	11873
	35	3768	4771	5775	6991	8207	9773	11340
	43	3329	4211	5093	6152	7212	8564	9917
N2CQ26-3LS-D	27	4707	6028	7349	8965	10581	12559	14536
	32	4444	5636	6829	8314	9800	11649	13498
	35	4286	5401	6517	7924	9331	11103	12875
	43	3865	4775	5685	6883	8081	9647	11214
N2CQ30-3LS-D	27	5796	7346	8896	10855	12814	15165	17515
	32	5419	6859	8299	10082	11865	14031	16198
	35	5193	6566	7940	9618	11295	13352	15408
	43	4590	5786	6983	8380	9777	11539	13300
N2CQ36-3LS-D	27	6957	8724	10492	12697	14903	17537	20172
	32	6483	8118	9754	11782	13810	16232	18654
	35	6198	7755	9312	11233	13155	15449	17743
	43	5439	6785	8132	9769	11407	13360	-
N2CQ48-3LS-E	27	8708	11123	13538	16515	19492	23196	26899
	32	8083	10365	12647	15408	18170	21584	24999
	35	7707	9910	12112	14744	17377	20618	23859
	43	6706	8696	10686	12974	15261	18040	20818
N2CQ66-3LS-E	27	10364	14201	18037	21895	25754	30079	34404
	32	9694	13189	16685	20224	23763	27792	31822
	35	9292	12583	15873	19221	22568	26420	30272
	43	8219	10965	13710	16546	19381	22761	-

N2CQ 'L' EVI Low noise twin compressor

Low Temperature

Case D



(H) 1192 x (W) 1560 x (D) 600

Case E



(H) 1192 x (W) 2260 x (D) 600

N2CQ26-3LV-D	27	6634	8364	10093	12264	14435	17268	20100
	32	6333	8054	9774	11933	14092	16940	19787
	35	6153	7868	9583	11735	13887	16743	19599
	43	5671	7372	9073	11205	13338	16743	-
N2CQ36-3LV-E	27	9920	12161	14401	17264	20127	16217	27432
	32	9846	11982	14117	16860	19603	23779	26715
	35	9801	11874	13947	16618	19288	23159	26285
	43	9682	11587	13493	15971	18450	22787	25138
N2CQ48-3LV-E	27	11684	14806	17928	21613	25298	29653	34008
	32	11381	14492	17604	21166	24728	28878	33027
	35	11199	14304	17409	20898	24387	28413	32439
	43	10715	13802	16889	20182	23476	27173	-
N2CQ66-3LV-E	27	16226	20075	23924	28577	33230	38836	44442
	32	15982	19660	23337	27754	32171	37514	42856
	35	15836	19410	22985	27261	31536	36720	41904
	43	-	-	-	-	-	-	-

Performance data in Watts rated at 20°C Return Gas Temperature, 0K Sub Cooling

Compressor		Case Size Drawing	Fansets (230V/1ph/50Hz)			Connection Sizes		Liquid Receiver	Dry Weight	Sound Levels	
FLC	LRA		Number of Fans and Diameter	FLC	LRA	Suction	Liquid			dB(A)*	
(A)	(A)			(A)	(A)	inches	inches	(L)	(kg)	Max*	Min*
2 x 6.0	2 x 40	D	2 x 400 6pl	2.0	3.6	1 1/8"	5/8"	18.0	218	42	38
2 x 7.0	2 x 46	D	2 x 400 6pl	2.0	3.6	1 1/8"	5/8"	18.0	220	42	38
2 x 8.0	2 x 52	D	2 x 400 6pl	2.0	3.6	1 3/8"	5/8"	18.0	241	42	38
2 x 10.0	2 x 64	D	2 x 450 6pl	2.0	3.6	1 3/8"	5/8"	18.0	251	42	38
2 x 12.0	2 x 74	D	2 x 450 6pl	2.0	3.6	1 3/8"	5/8"	18.0	255	42	38
2 x 16.1	2 x 99	E	4 x 450 6pl	4.0	7.2	1 5/8"	7/8"	18.0	435	45	41
2 x 22.3	2 x 134	E	4 x 450 6pl	4.0	7.2	1 5/8"	7/8"	18.0	435	45	41
2 x 8.0	2 x 51.5	D	2 x 450 6pl	2.0	3.6	1 3/8"	5/8"	18.0	241	42	38
2 x 12.0	2 x 74.5	E	4 x 450 6pl	4.0	7.2	1 3/8"	7/8"	18.0	305	45	41
2 x 16.1	2 x 99	E	4 x 450 6pl	4.0	7.2	1 5/8"	7/8"	18.0	435	45	44
2 x 22.3	2 x 127	E	4 x 450 6pl	4.0	7.2	1 5/8"	7/8"	18.0	435	45	44

* Noise levels in dB(A) at 10m from the front face of the unit, min. noise levels with fan speed control at minimum speed

N2CQ 'M' Range Low noise twin compressor

RA404A

Medium Temperature

Case D



(H) 1192 x (W) 1560 x (D) 600

Case E



(H) 1192 x (W) 2260 x (D) 600

Model	Ambient	Saturated Suction Temperature (°C)						
	(°C)	-20	-15	-10	-5	0	5	-10
N2CQ30-3MX-D	27	5408	6677	7947	9483	11020	12859	14698
	32	4889	6082	7274	8709	10145	11835	13525
	35	4579	5724	6870	8245	9619	11220	12822
	43	3749	4772	5794	7006	8218	9582	10945
N2CQ38-3MX-D	27	6622	8032	9442	11204	12966	15077	17188
	32	6122	7424	8727	10377	12028	13992	15956
	35	5821	7059	8297	9881	11465	13341	15216
	43	5021	6087	7152	8558	9964	11604	13245
N2CQ42-3MX-D	27	7844	9462	11080	13071	15062	17363	19664
	32	7250	8739	10229	12074	13920	16059	18197
	35	6894	8306	9718	11476	13235	15276	17317
	43	5945	7150	8356	9882	11408	13189	14970
N2CQ52-3MX-D	27	9079	10961	12843	15174	17505	20233	22961
	32	8364	10118	11871	14037	16202	18748	21293
	35	7935	9612	11288	13354	15420	17856	20293
	43	6791	8262	9733	11534	13335	15480	17625
N2CQ60-3MX-D	27	10423	12543	14663	17250	19837	22843	25850
	32	9566	11532	13498	15910	18321	21156	23991
	35	9052	10925	12799	15105	17412	20144	22876
	43	7682	9308	10934	12960	14987	-	-
N2CQ76-3MX-E	27	13396	16224	19053	22506	25958	30032	34105
	32	12365	14989	17612	20836	24059	27864	31668
	35	11746	14247	16748	19834	22920	26563	30206
	43	10097	12270	14443	17162	19882	23095	26307
N2CQ90-3MX-E	27	15766	19082	22397	26420	30442	35127	39813
	32	14565	17623	20681	24420	28159	32512	36865
	35	13844	16748	19652	23220	26789	30943	35097
	43	11923	14415	16906	20021	23136	26759	30381
N2CQ100-3MX-E	27	17993	21603	25213	29497	33781	38743	43704
	32	16639	19961	23283	27230	31176	35768	40360
	35	15827	18976	22125	25869	29613	33983	38354
	43	13660	16349	19038	22242	25446	29224	-
N2CQ116-3MX-E	27	17654	22730	27807	32783	37759	43211	48663
	32	15711	20673	25634	30327	35019	40085	45151
	35	14546	19438	24330	28853	33375	38209	43043
	43	11439	16146	20854	24922	28990	-	-

Performance data in Watts rated at 20°C Return Gas Temperature, 0K Sub Cooling

Compressor		Case Size Drawing	Fansets (230V/1ph/50Hz)			Connection Sizes		Liquid Receiver	Dry Weight	Sound Levels	
FLC	LRA		Number of Fans and Diameter	FLC	LRA	Suction	Liquid			dB(A)*	
(A)	(A)			(A)	(A)	inches	inches	(L)	(kg)	Max*	Min*
2 x 4.9	2 x 26	D	2 x 450 6pl	2.0	3.6	1 1/8"	5/8"	18.0	203	41	31
2 x 6.5	2 x 32	D	2 x 450 6pl	2.0	3.6	1 1/8"	5/8"	18.0	209	41	31
2 x 7.2	2 x 40	D	2 x 450 6pl	2.0	3.6	1 1/8"	5/8"	18.0	220	41	31
2 x 8.85	2 x 46	D	2 x 450 6pl	2.0	3.6	1 3/8"	5/8"	18.0	222	41	32
2 x 10.3	2 x 49.3	D	2 x 450 6pl	2.0	3.6	1 3/8"	5/8"	18.0	240	42	36
2 x 12.8	2 x 65.5	E	4 x 450 6pl	4.0	7.2	1 3/8"	7/8"	18.0	273	44	35
2 x 12.1	2 x 74	E	4 x 450 6pl	4.0	7.2	1 3/8"	7/8"	18.0	295	44	35
2 x 14.6	2 x 100	E	4 x 450 6pl	4.0	7.2	1 5/8"	7/8"	18.0	352	45	41
2 x 14.6	2 x 100	E	4 x 450 6pl	4.0	7.2	1 5/8"	7/8"	18.0	352	45	42

* Noise levels in dB(A) at 10m from the front face of the unit, min. noise levels with fan speed control at minimum speed

NDQ - N2DQ Condensing Unit

engineering for a better world



GEA Searle NDQ and N2DQ Digital condensing units are the latest addition to the Searle range. They feature the new scroll digital compressor which precisely matches the refrigeration load to provide significant energy savings. The N2DQ is the twin compressor choice, with 1 digital scroll and 1 normal scroll compressor. The NDQ comprises three models and N2DQ range comprises five models using refrigerants R404A/R507 and R407C. The low temperature models (-40°C to -10°C) cover a capacity range of 6.22 kW to 12.22 kW while the medium temperature units (-20°C to +10°C) range from 7.19 kW to 20.7 kW.

N2DQ Standard Features

CE Marked Unit, weatherproof housing with separate acoustically lined compressor compartment, Concealed, low noise condenser fans, Copper tube coil with vinyl-coated aluminium fins, Capacity control 100-10-0% for NDQ, 100-5-0% for N2DQ, Fully-wired control panel with mains isolator, Electronic step controller, Low ambient fan speed control, MCB protected crankcase heaters.

- Twin scroll compressors (with liquid injection and oil management system on low temperature 'LS' models),
- Compressor motor starter with short circuit and overload protection, Compressor contactors,
- Compressor start delay and anti-recycle timer integrated into step control, Volt-free contact for alarm signal,
- HP/LP switch auto reset,
- Sight glass and filter drier,
- Liquid receiver with fitted pressure relief valve,
- Rotalock service valves on compressors and receiver,
- Oil level sight glass.

1	2	3	4		5				
N	D	Q	30	-	3	M	X	-	C
						6	7		8

1. Range:	N
2. Comp Technology:	D = Single Digital Scroll, 2D =Twin Digital Scroll
3. Unit Type:	Q = Quiet (6)
4. Compressor:	eg. 30, 45, 60
5. Phase:	3 = 3 Phase
6. Temperature:	M = Medium, L = Low
7. Oil separator:	S = Oil separator, X = No oil separator, V = EVI
8. Coil/Case:	C, D, E

NDQ/N2DQ - Condensing units



NDQ/N2DQ - Features



1. Vinyl coated condenser coil
2. Condenser fanset
3. Oil separator
4. Liquid receiver with fitted PRV
5. Filter Drier/sightglass
6. HP switch auto re-set
7. Compressor
8. Acoustic insulation
9. Control panel

1. Vinyl coated condenser coil
2. Condenser fanset
3. Control panel
4. Liquid receiver with fitted PRV
5. Compressor
6. Acoustic insulation
7. Main controller with compressor anti-cycle protection
8. Main isolation
9. Overload/manual motor starter
10. Alarm terminals
11. Compressor contactor



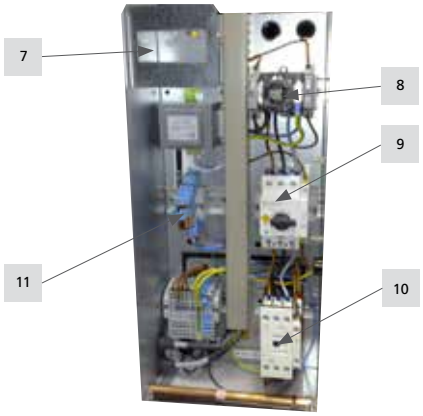

NDQ 'L' Range Low noise digital EVI Low Temperature **R404A**

Case C



(H) 1078 x (W) 1128 x (D) 505

Model	Ambient (°C)	Saturated Suction Temperature (°C)						
		-40	-35	-30	-25	-20	-15	-10
NDQ18-3LV-C	27	5146	6311	7476	8968	10459	12388	14316
	32	5119	6225	7331	8765	10198	12078	13959
	35	5103	6174	7245	8643	10041	11893	13744
	43	5060	6037	7014	8318	9623	11398	-

N2DQ 'L' Range Low noise digital twin EVI compressor Low Temperature

Case E



(H) 1192 x (W) 2260 x (D) 600

Model	Ambient (°C)	Saturated Suction Temperature (°C)						
		-40	-35	-30	-25	-20	-15	-10
N2DQ36-3LV-E	27	10108	12400	14692	17625	20559	24327	28096
	32	10044	12225	14405	17221	20036	23708	27380
	35	10006	12120	14234	16978	19722	23337	26951
	43	9904	11840	13776	16331	18886	22346	25806

NDQ 'M' Range Low noise single digital Medium Temperature

Case C



(H) 1078 x (W) 1128 x (D) 505

Case E



(H) 1192 x (W) 2260 x (D) 600

Model	Ambient (°C)	Saturated Suction Temperature (°C)						
		-20	-15	-10	-5	0	5	-10
NDQ30-3MX/S-C	27	5454	6556	7654	8987	10320	14466	16341
	32	5077	6098	7119	8364	9609	13439	15181
	35	4851	5824	6798	7990	9182	12822	14486
	43	4247	5095	5942	6993	8045	11179	12630
NDQ38-3MX/S-C	27	6644	7968	9293	10942	12591	17577	20182
	32	6183	7410	8637	10167	11696	16813	19318
	35	5907	7075	8244	9702	11159	16355	18800
	43	5170	6183	7195	8461	9728	-	-
NDQ45-3MX/S-C	27	7188	8914	10640	12806	14972	17577	20182
	32	6812	8472	10133	12220	14308	16813	19318
	35	6587	8208	9828	11869	13909	16355	18800
	43	5986	7501	9016	10932	-	-	-
NDQ58-3MX/S-E	27	12889	12889	15438	18361	21284	24779	28273
	32	11765	11765	14337	17085	19833	23075	26317
	35	11090	11090	13677	16320	18962	22053	25144
	43	9291	9291	11916	14278	16641	19327	22014
NDQ76-3MX/S-E	27	13304	16439	19574	23118	26663	30732	34801
	32	11948	15064	18480	21488	24797	28573	32349
	35	11135	14239	17343	20510	23677	27277	30878
	43	8967	12040	15113	17902	20691	23823	26954

N2DQ 'M' Range Low noise digital twin compressor Medium Temperature

Case D



(H) 1192 x (W) 1560 x (D) 600

Case E



(H) 1192 x (W) 2260 x (D) 600

Model	Ambient (°C)	Saturated Suction Temperature (°C)						
		-20	-15	-10	-5	0	5	-10
N2DQ60-3MX-D	27	10537	12640	14743	17284	19825	22745	25666
	32	9734	11684	13633	16002	18371	21122	23872
	35	9253	11110	12966	15233	17499	20148	22796
	43	7969	9579	11190	13182	15173	-	-
N2DQ60-3MX-E	27	11154	13511	15868	18803	21737	25212	28686
	32	10343	12536	14728	17472	20217	23489	26762
	35	9856	11950	14044	16674	19304	22456	25608
	43	8558	10389	12220	14546	16871	19700	22530
N2DQ76-3MS-E	27	13385	16141	18897	22303	25708	29663	33618
	32	12408	14964	17519	20690	23860	27545	31230
	35	11822	14258	16693	19722	22751	26274	29797
	43	10260	12374	14488	17141	19793	22885	25976
N2DQ90-3MX-E	27	15216	18654	22091	26344	30597	35660	40723
	32	14237	17477	20716	24743	28770	33557	38343
	35	13650	16771	19891	23783	27674	32295	36915
	43	12084	14888	17691	21221	24751	28929	-
N2DQ116-3MX-E	27	18097	23019	27942	32879	37817	43263	48709
	32	16011	20900	25789	30432	35075	40116	45157
	35	14760	19629	24497	28964	33430	38228	43025
	43	11424	16238	21053	25048	29044	-	-

Performance data in Watts rated at 20oC Return Gas Temperature, 0K Sub Cooling

Compressor		Case Size Drawing	Fansets (230V/1ph/50Hz)			Connection Sizes		Liquid Receiver	Dry Weight	Sound Levels	
FLC	LRA		Number of Fans and Diameter	FLC	LRA	Suction	Liquid			dB(A)*	
(A)	(A)			(A)	(A)	inches	inches	(L)	(kg)	Max*	Min*
13.8	74.0	C	2 x 400 6pl	1.4	2.8	7/8"	1/2"	6.2	167	42	36

Compressor		Case Size Drawing	Fansets (230V/1ph/50Hz)			Connection Sizes		Liquid Receiver	Dry Weight	Sound Levels	
FLC	LRA		Number of Fans and Diameter	FLC	LRA	Suction	Liquid			dB(A)*	
(A)	(A)			(A)	(A)	inches	inches	(L)	(kg)	Max*	Min*
13.8 12.0	74.0 74.0	E	4 x 450 6pl	4.0	7.2	1 5/8"	7/8"	18.0	305	45	41

Compressor		Case Size Drawing	Fansets (230V/1ph/50Hz)			Connection Sizes		Liquid Receiver	Dry Weight	Sound Levels	
FLC	LRA		Number of Fans and Diameter	FLC	LRA	Suction	Liquid			dB(A)*	
(A)	(A)			(A)	(A)	inches	inches	(L)	(kg)	Max*	Min*
7.9	51.5	C	2 x 400 6pl	1.4	2.8	7/8"	1/2"	6.2	159	41	34
11.3	65.5	C	2 x 400 6pl	1.4	2.8	7/8"	1/2"	6.2	159	41	34
11.4	74.0	C	2 x 400 6pl	1.4	2.8	7/8"	1/2"	6.2	170	41	32
16.4	95.0	E	4 x 450 6pl	4	7.2	1 3/8"	5/8"	18	276	45	36
20.4	118	E	4 x 450 6pl	4	7.2	1 3/8"	5/8"	18	289	45	39

Compressor		Case Size Drawing	Fansets (230V/1ph/50Hz)			Connection Sizes		Liquid Receiver	Dry Weight	Sound Levels	
FLC	LRA		Number of Fans and Diameter	FLC	LRA	Suction	Liquid			dB(A)*	
(A)	(A)			(A)	(A)	inches	inches	(L)	(kg)	Max*	Min*
7.9 10.0	51.5 51.5	D	2 x 450 6pl	2.0	3.6	1 3/8"	5/8"	18.0	240	44	38
7.9 10.0	51.5 1.5	E	4 x 450 6pl	4.0	7.2	1 3/8"	5/8"	18.0	295	44	38
11.3 12.8	65.5 65.5	E	4 x 450 6pl	4.0	7.2	1 3/8"	7/8"	18.0	300	44	35
13.0 11.4	74.0 74.0	E	4 x 450 6pl	4.0	7.4	1 3/8"	5/8"	18.0	295	44	35
16.4 15.0	95.0 95.0	E	4 x 450 6pl	4.0	7.2	1 3/8"	7/8"	18.0	335	45	41

* Noise levels in dB(A) at 10m from the front face of the unit, min. noise levels with fan speed control at minimum speed

Correction factors

R407C Capacities

The following units can be used with R407C refrigerant : NSE-NCE 'M' units, NSQ-NCQ 'M' units and N2CQ 'M' units. Multiply the relevant R404A capacity by the factor below.

Model average	Ambient	Saturated Suction Temperature (°C)						
	(°C)	-20	-15	-10	-5	0	5	-10
R407C from R404A correction factor	27	0.809	0.848	0.876	0.914	0.942	0.966	0.984
	32	0.807	0.852	0.883	0.926	0.957	0.982	1.001
	35	-	0.854	0.888	0.933	0.967	0.992	1.012
	38	-	-	0.893	0.942	0.978	1.004	-
	43	-	-	-	0.959	-	-	-

Correction factors are for guidance only, and are subject to a +/-8% Tolerance -20 to -15 SST, and +/-5% Tolerance -10 to +10 SST. Contact GEA Searle for a detailed unit selection if required.

Wall and floor mounting instructions - Case A, B & C

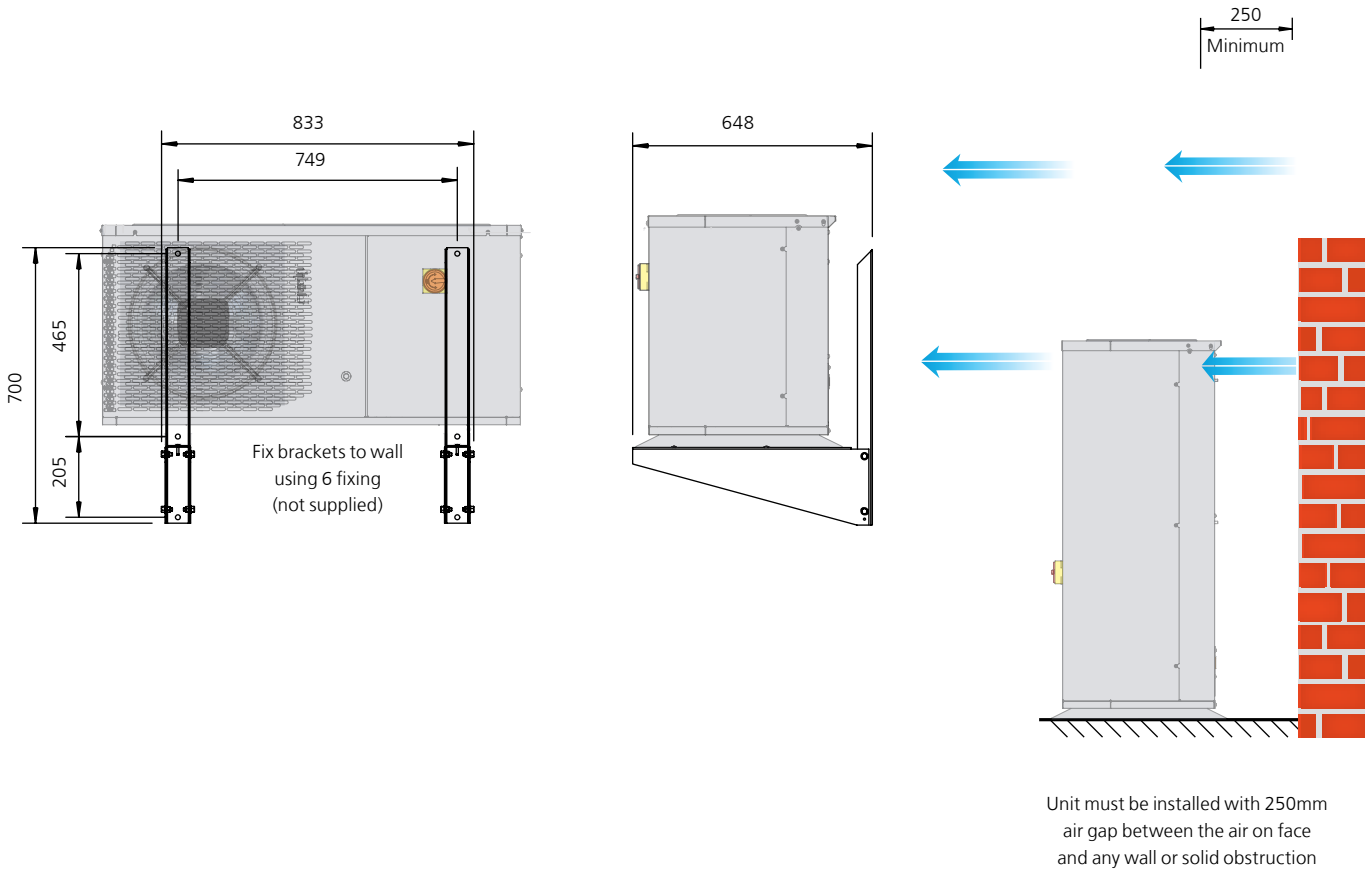

Unit must be installed with 250mm air gap between the air on face and any wall or solid obstruction

Dimension drawings

Case A,B & C

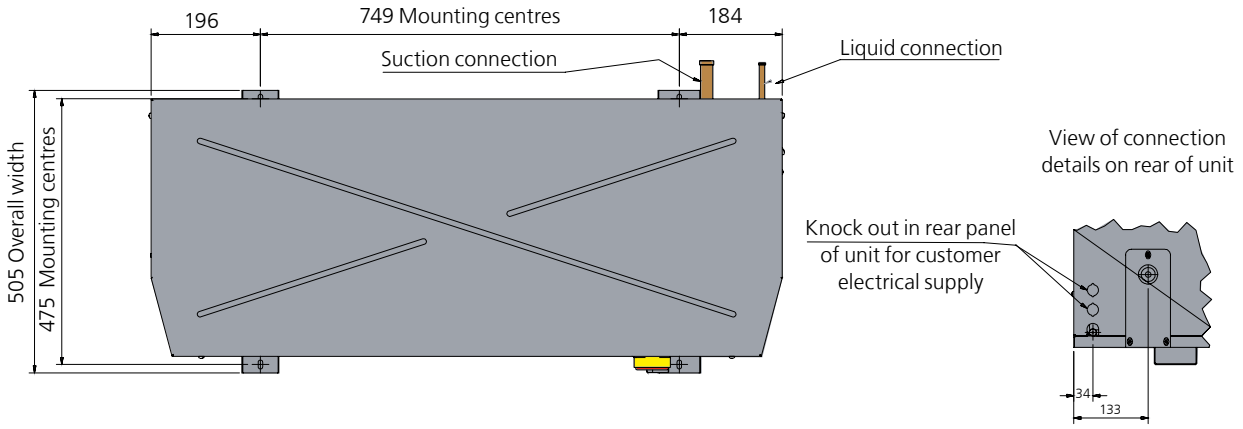

Case A and B Front View and End view

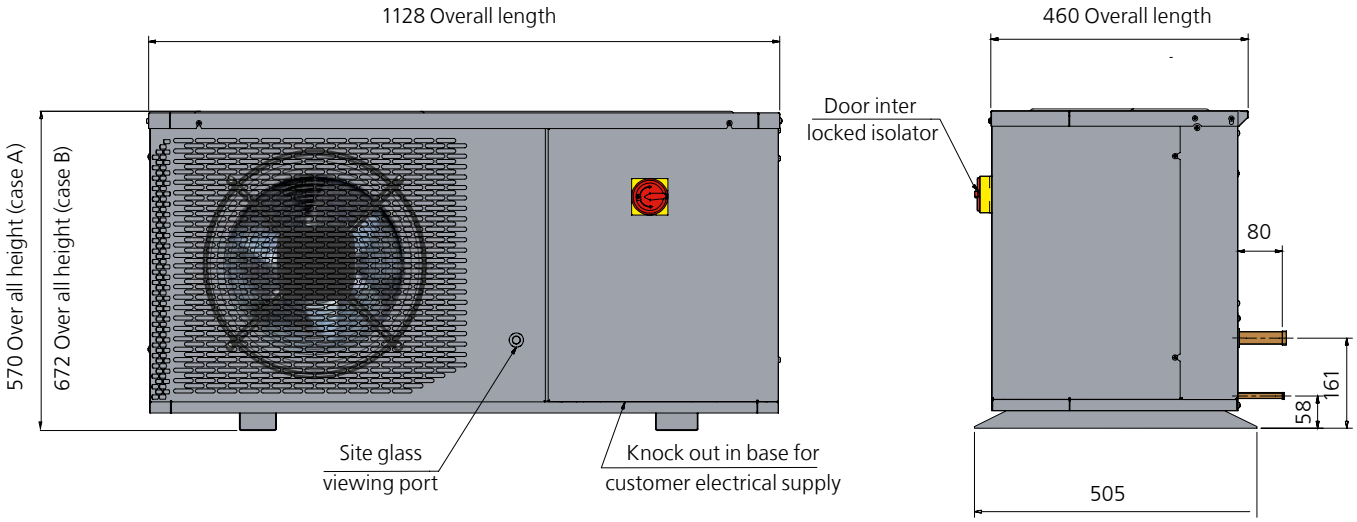

Case C Front View and End view

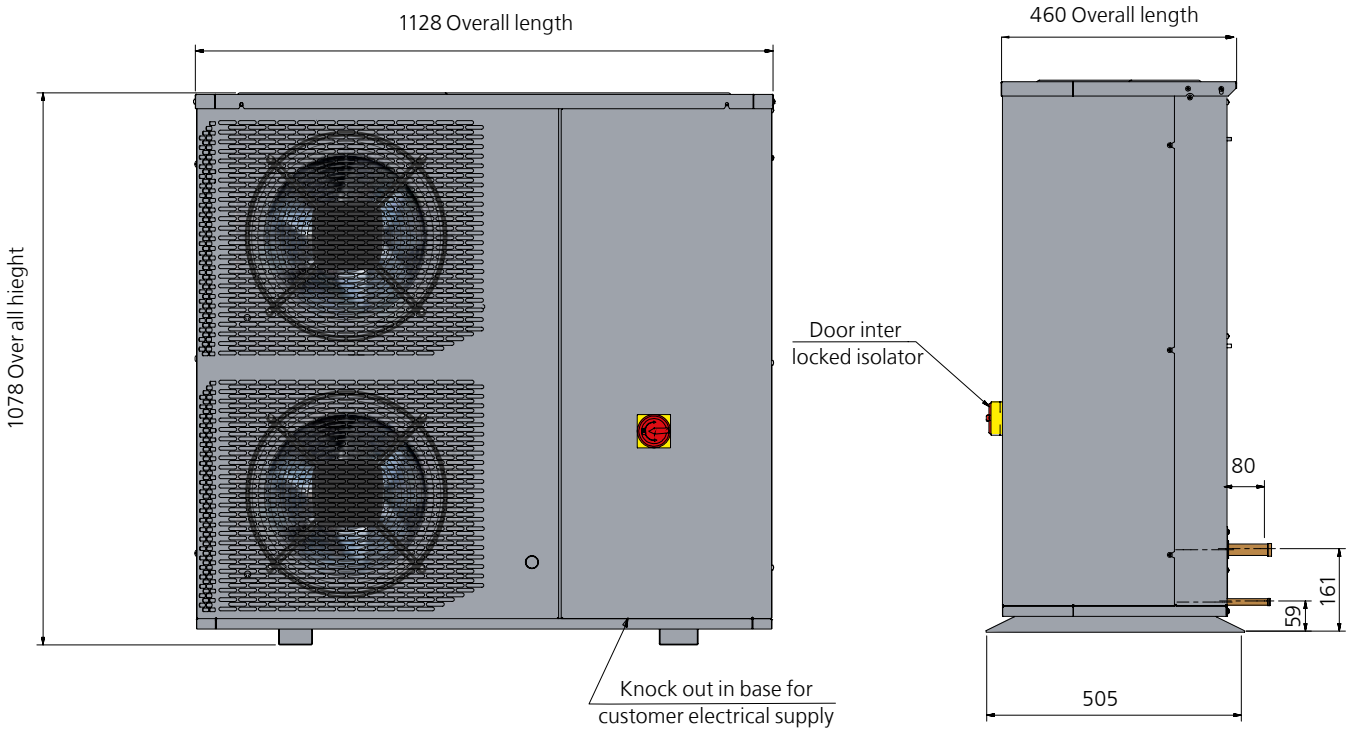

Case D

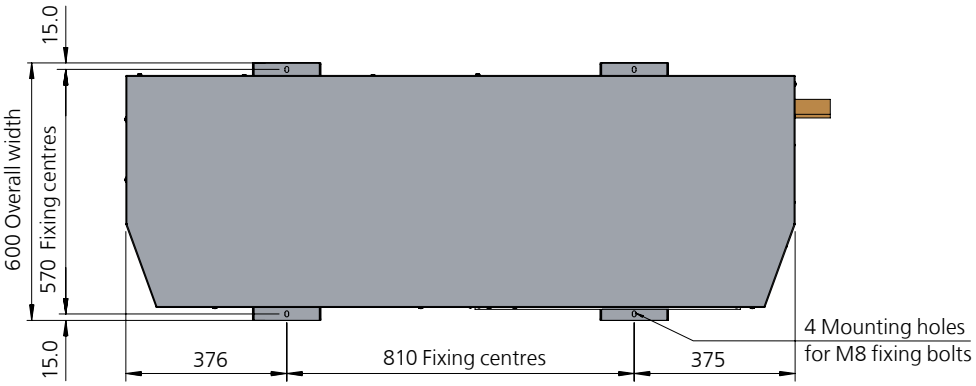
15.0
600 Overall width
570 Fixing centres
15.0
376
810 Fixing centres
375
4 Mounting holes
for M8 fixing bolts

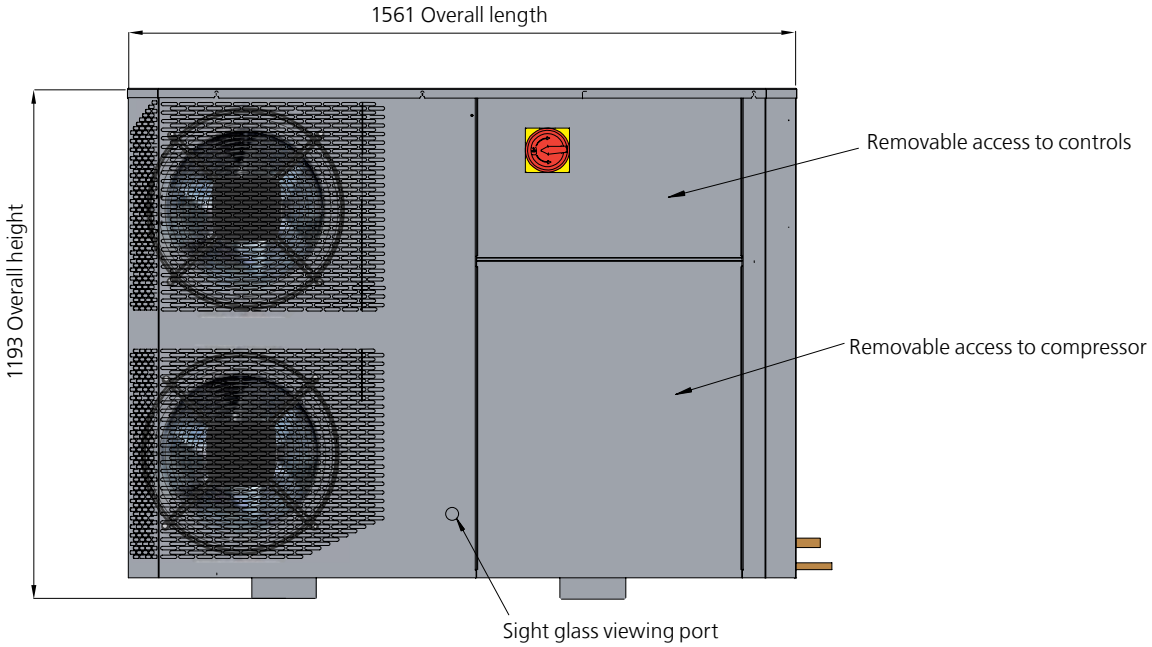
1561 Overall length
1193 Overall height
Removable access to controls
Removable access to compressor
Sight glass viewing port

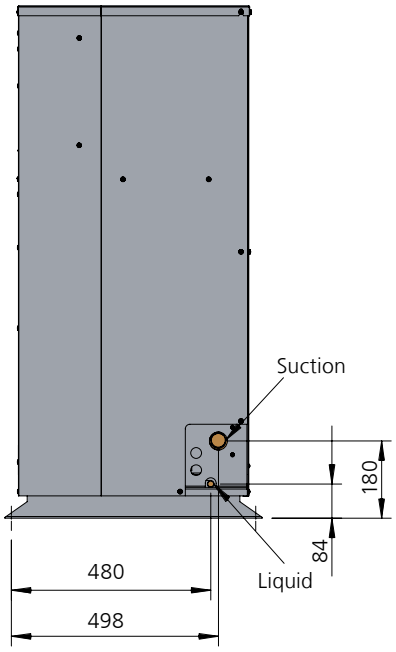
Suction
180
84
480
498
Liquid

Case E

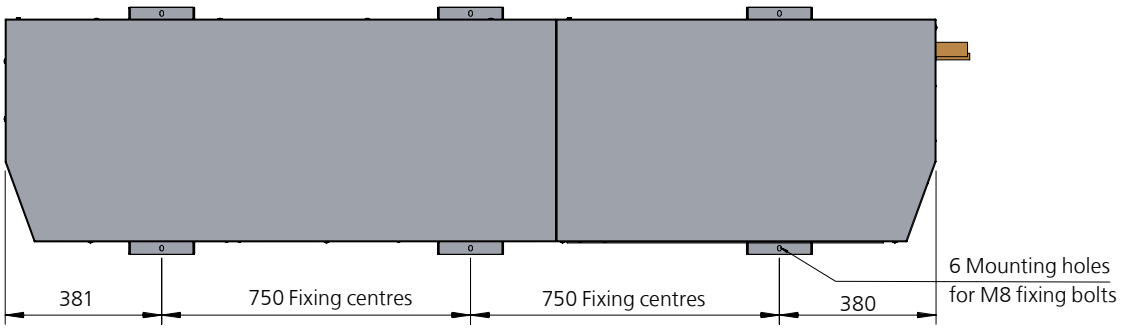
381
750 Fixing centres
750 Fixing centres
380
6 Mounting holes
for M8 fixing bolts

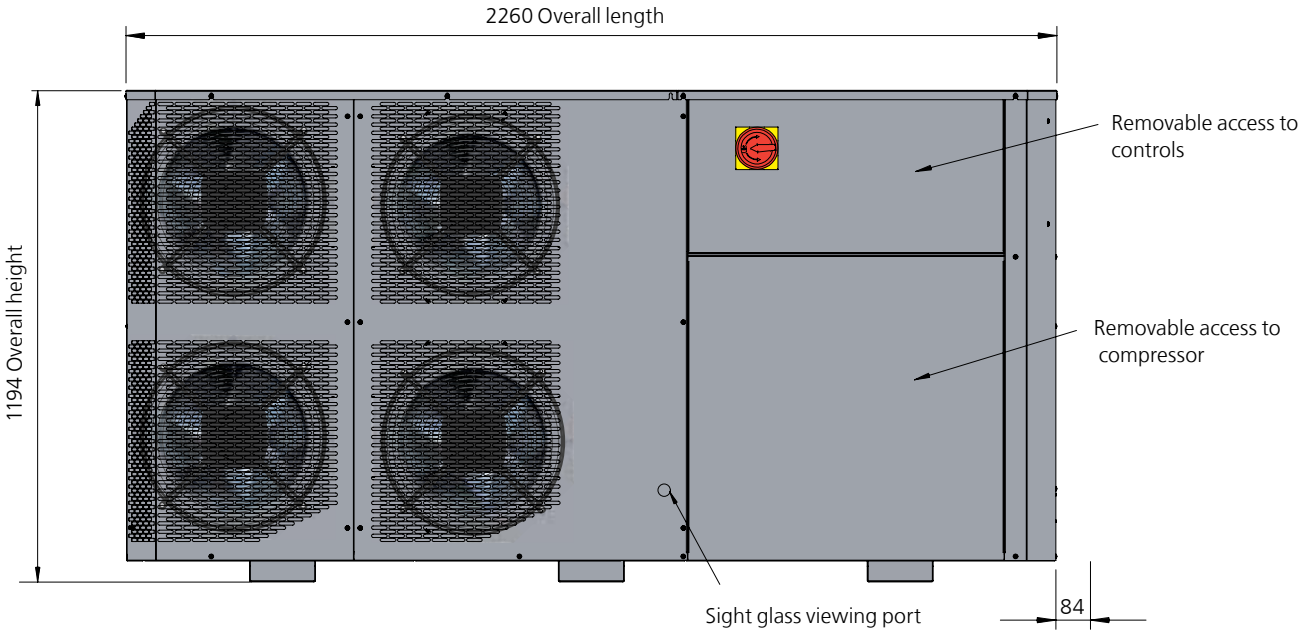
2260 Overall length
1194 Overall height
Removable access to
controls
Removable access to
compressor
Sight glass viewing port
84

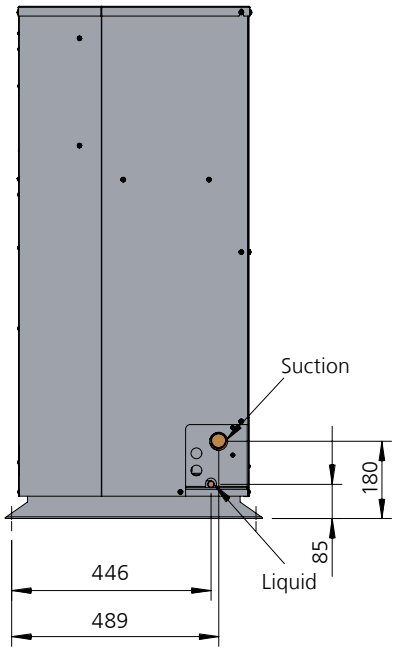
Suction
180
85
Liquid
446
489

HCU - HDU Condensing Unit

engineering for a better world

The HCU - HDU Range of condensing units offers a unique, ready-packaged solution for fast and easy installation of refrigeration systems where either three or four compressors are required. The range offers the following benefits:- Compact aesthetic design, Fully pre-wired, packaged unit, Comprehensive controls package, Energy efficient design, Low noise compressors and fansets, High quality, reliable components. For other unit combinations, including dual temperatures, contact your sales representatives.



Electrical controls

- Control components located in easily accessible separate front enclosure.
- 24V control system. Modulating fan speed control maintains head pressure in low ambient temperatures.
- Compressor contactors and thermal overload, incorporating short circuit protection, and individual compressor isolation.
- Individual compressor short cycle prevention function. Mains isolator and system HP/ LP switch (manual/ auto).

Overview

- Suitable for use with R404A , R507 and R407C on medium temperature units (other refrigerants on application).
- Two or three fans (two fans only on 12 - pole) , 6, 8or 12-pole motors for low-noise operation.
- Choice of three air-flow configurations for siting units internally or externally. Condenser coil with vinyl coated aluminium fins for extended life. Optional copper fin coil.
- Integral liquid sub-cooling section to enhance performance and removable doors and access panels for easy maintenance.
- 35 litre liquid receiver with fitted PRV. Options for Twin PRV, Twin burst disc, sightglass, low level indicator.
- Rotalock valves on all compressors and receivers for easy maintenance. Fully weatherproof, grey gloss painted, pre-galvanized steel casing.
- Acoustically lined compressor housing for minimal noise break-out. CE marked and manufactured under B EN ISO 9001 Quality Assurance.
- Units can be supplied with left or right handed connections. Forklift channels for ease of lifting.

Compressor and System

- HDU offers capacity control using 1 digital compressor
- Integral, separate acoustically lined compressor housing with forced extraction cooling.
- Various combinations of 3 or 4 Copeland Compliant scroll compressors for low or high temperature applications. Compressor rotalock valves for quick and easy maintenance.
- In-built oil management system - high pressure combined coalescing separator/ reservoir with individual oil level regulators.
- Oil separator shut-off valves for easy filter replacement. Spare separator filter supplied loose with unit. Crankcase heaters as standard.
- Vibration eliminators on compressor suction and discharge lines. Suction line ball valve and filter with replaceable core.
- Liquid line replaceable core drier with fitted core and replacement. Liquid line three-way valve enabling filter bypass for easy core change.

HCU/HDU - Condensing units



1	2	3	4	5							
HCU	5	5	E	E	-	V	2	08	-	L	
						6	7	8		9	

1. Range: HCU, HDU
2. Compressor: No 1 (refer to compressor reference table)
3. Compressor: No 1 (refer to compressor reference table)
4. Compressor: No 1 (refer to compressor reference table)
5. Compressor: No 1 (refer to compressor reference table)
6. Air Flow: V = Vertical H = Horizontal R = Recirculatory
7. No of fans: 2, 3
8. Motor Poles: 12, 08 or 06
9. Pipe connections: L = Left R = Right

(Pipe connections viewed from front (compressor door side of unit)

HCU/HDU - Compressor reference table

Medium Temperature				Low Temperature	
HDU (Comprssor 1 only)		HCU (Compressors 1 to 4) HDU (Compressors 3 to 4)		HCU (Compressors 1 to 4) HDU (no option)	
Compressor	Reference	Compressor	Reference	Compressor	Reference
-	0	ZB15KCE-TFD	0	-	-
-	1	ZB19KCE-TFD	1	-	-
-	2	ZB21KCE-TFD	2	ZF09K4E-TFD	C
-	3	ZB26KCE-TFD	3	ZF11K4E-TFD	D
-	4	ZB30KCE-TFD	4	ZF13K4E-TFD	E
-	5	ZB38KCE-TFD	5	ZF15K4E-TFD	F
ZBD45KCE-TFD	6	ZB45KCE-TFD	6	ZF18K4E-TFD	G
ZBD58KCE-TFD	7	ZB58KCE-TFD	7	ZF24K4E-TFD	H
ZBD76KCE-TFD	8	ZB76KCE-TFD	8	ZF33K4E-TFD	J
No Compressor	-	No Compressor	-	No Compressor	-

HCU 'L' Range Ultra low noise (12pl)

Low temperature



(H) 1815 x (W) 2310 x (D)895

Model	Ambient (°C)	Saturated Suction Temperature (°C)						
		-40	-35	-30	-25	-20	-15	-10
HCU DDD V/H 212 R/L	27	6466	8236	10005	12214	14422	17370	20318
	32	6057	7710	9364	11420	13477	16212	18946
	35	5811	7395	8979	10944	12909	15516	18124
	43	5156	6555	7953	9675	11396	13663	15930
HCU DDDD V/H 212 R/L	27	8670	11055	13441	16434	19426	23449	27471
	32	8124	10355	12585	15374	18162	21897	25631
	35	7797	9935	12072	14738	17403	20965	24528
	43	6925	8814	10704	13042	15380	18482	21584
HCU EEE V/H 212 R/L	27	7223	9344	11465	14114	16763	20065	23367
	32	6832	8757	10682	13127	15571	18666	21761
	35	6598	8405	10213	12535	14856	17827	20798
	43	5972	7467	8961	10955	12950	15590	18229
HCU EEEE V/H 212 R/L	27	9467	12155	14842	18147	21451	25511	29571
	32	8942	11372	13801	16841	19882	23680	27478
	35	8627	10902	13176	16058	18940	22581	26223
	43	7787	9649	11511	13970	16429	19652	22874
HCU FFF V/H 212 R/L	27	8852	11270	13688	16821	19954	23782	27610
	32	8288	10539	12790	15653	18515	22054	25592
	35	7950	10101	12252	14952	17653	21017	24381
	43	7049	8932	10815	13083	15351	18252	21153
HCU FFFF V/H 212 R/L	27	11515	14573	17630	21456	25282	29844	34406
	32	10761	13598	16434	19912	23390	27591	31792
	35	10308	13013	15717	18986	22255	26239	30224
	43	9101	11452	13804	16515	19227	22634	26041

HCU 'L' Range Low noise (8pl)

Low temperature



(H) 1815 x (W) 2310 x (D)895

HCU FFFF V/H 208 R/L	27	11890	15167	18444	22734	27023	32308	37593
	32	11140	14194	17247	21172	25097	29987	34877
	35	10691	13609	16528	20235	23942	28594	33247
	43	9492	12052	14612	17736	20860	24881	28901
HCU GGG V/H 208 R/L	27	11009	13974	16940	20841	24723	29694	34645
	32	10304	13065	15826	19438	23050	27635	32220
	35	9881	12519	15157	18595	22034	26399	30765
	43	8753	11064	13374	16349	19325	23105	26885
HCU GGGG V/H 308 R/L	27	14512	18371	22230	27250	32269	38555	44841
	32	13570	17158	20747	25387	30028	35841	41653
	35	13004	16431	19857	24270	28683	34212	39740
	43	11497	14491	17484	21291	25097	29869	34640
HCU HHH V/H 308 R/L	27	13222	16921	20620	25237	29854	35681	41507
	32	12284	15783	19282	23571	27861	33242	38623
	35	11722	15100	18478	22571	26665	31779	36893
	43	10221	13279	16337	19906	23475	27877	32280

HCU 'L' Range Standard noise (6pl)

Low temperature



(H) 1815 x (W) 2310 x (D)895

HCU HHHH V/H 306 R/L	27	17659	22603	27547	33729	39911	47727	55543
	32	16408	21085	25762	31507	37251	44471	51692
	35	15657	20174	24691	30173	35655	42518	49381
	43	13655	17746	21836	26618	31400	37309	43218
HCU JJJ V/H 306 R/L	27	16126	22463	28800	35445	42091	49758	57425
	32	15132	20945	26759	32896	39033	46211	53388
	35	14535	20035	25534	31366	37199	44082	50966
	43	12944	17606	22268	27288	32307	38407	44506
HCU JJJJ V/H 306 R/L	27	21063	29066	37068	45264	53460	62762	72064
	32	19728	27042	34356	41896	49435	58121	66808
	35	18928	25828	32729	39875	47020	55337	63654
	43	16792	22591	28390	34485	40581	47913	55245

Performance data in Watts rated at 20oC Return Gas Temperature, 0K Sub Cooling

Compressor		Case Size Drawing	Fansets (230V/1ph/50Hz)			Connection Sizes		Liquid Receiver	Dry Weight	Sound Levels	
FLC	LRA		Number of Fans and Diameter	FLC	LRA	Suction	Liquid			dB(A)*	
(A)	(A)			(A)	(A)	inches	inches	(L)	(kg)	Max*	Min*
3x 7	3x 46	H	2x 630 12pl	2.4	3.0	1 5/8	7/8	35.0	757	37	35
4x 7	4x 46	H	2x 630 12pl	2.4	3.0	2 1/8	7/8	35.0	790	38	36
3x 8	3x 52	H	2x 630 12pl	2.4	3.0	1 5/8	7/8	35.0	787	41	40
4x 8	4x 52	H	2x 630 12pl	2.4	3.0	2 1/8	7/8	35.0	830	42	41
3x 10	3x 64	H	2x 630 12pl	2.4	3.0	2 1/8	7/8	35.0	790	44	44
4x 10	4x 64	H	2x 630 12pl	2.4	3.0	2 1/8	7/8	35.0	790	44	44
4x 10	4x 64	H	2x 630 8pl	4.0	6.6	2 1/8"	7/8"	35.0	847	48	46
3x 12	3x 74	H	2x 630 8pl	4.0	6.6	2 1/8"	7/8"	35.0	810	46	42
4x 12	4x 74	H	3x 630 8pl	6.0	7.2	2 1/8"	7/8"	35.0	855	48	44
3x 16.1	3x 99	H	3x 630 8pl	6.0	7.2	2 5/8"	7/8"	35.0	1079	54	53
4x 16.1	4x 99	H	3x 630 6pl	8.7	14.4	2 5/8"	7/8"	35.0	1079	54	53
3x 22.3	3x 134	H	3x 630 6pl	8.7	14.4	2 5/8"	7/8"	35.0	1079	54	53
4x 22.3	4x 134	H	3x 630 6pl	8.7	14.4	2 5/8"	7/8"	35.0	1179	54	53

* Noise levels in dB(A) at 10m from the front face of the unit, min noise levels with fan speed control at minimum speed

HCU 'M' Range Ultra low noise (12pl) Medium temperature

R404A

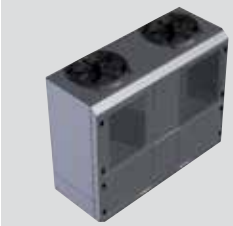

(H) 1815 x (W) 2310 x (D)895

Model	Ambient (°C)	Saturated Suction Temperature (°C)						
		-20	-15	-10	-5	0	5	10
HCU 333 V/H 212 R/L	27	13932	16871	19813	23508	27203	31587	35971
	32	12855	15599	18343	21780	25217	29313	33408
	35	12210	14836	17461	20744	24026	27948	31871
	43	10491	12800	15109	17979	20849	24310	27770

HCU 'M' Range Low noise (8pl) Medium temperature



(H) 1815 x (W) 2310 x (D)895

HCU 3333 V/H 208 R/L	27	18809	22823	26837	31921	37004	43084	49163
	32	17374	21122	24869	29600	34331	40014	45697
	35	16513	20101	23688	28208	32728	38172	43617
	43	14217	17378	20539	24495	28451	33261	38071
HCU 444 V/H 208 R/L	27	16852	20507	24163	28791	33418	38959	44500
	32	15555	18959	22363	26690	31018	36253	41487
	35	14777	18030	21282	25430	29578	34628	39679
	43	12702	15552	18402	22070	25737	30298	34858
HCU 4444 V/H 208 R/L	27	21754	26341	30928	36641	42353	49095	55838
	32	20031	24295	28558	33894	39230	45593	51957
	35	18998	23067	27136	32246	37356	43492	49628
	43	16242	19793	23345	27851	32358	37888	43418
HCU 555 V/H 208 R/L	27	20413	24788	29163	34543	39923	46339	52755
	32	18863	22925	26987	32016	37044	43039	49035
	35	17933	21808	25682	30499	35316	41059	46802
	43	15454	18828	22201	26455	30709	35779	40849
HCU 5555 V/H 308 R/L	27	26617	32205	37792	44591	51390	59376	67362
	32	24557	29738	34919	41265	47611	55065	62519
	35	23321	28258	33195	39270	45344	52479	59613
	43	20026	24312	28598	33948	39298	45582	51865
HCU 666 V/H 308 R/L	27	23952	29056	34160	40391	46621	53952	61283
	32	22147	26859	31571	37366	43161	49978	56794
	35	21064	25541	30018	35552	41085	47593	54101
	43	18176	22026	25876	30713	35549	41234	46918
HCU 6666 V/H 308 R/L	27	30656	36919	43181	50672	58163	66715	75267
	32	28262	34027	39791	46743	53696	61626	69557
	35	26826	32291	37756	44386	51015	58573	66131
	43	22996	27664	32331	38099	43866	50431	-

HCU 'M' Range Standard noise (6pl) Medium temperature



(H) 1815 x (W) 2310 x (D)895

HCU 6666 V/H 306 R/L	27	32021	38861	45700	54062	62424	72285	82145
	32	29613	35929	42246	50025	57805	66973	76142
	35	28168	34171	40173	47603	55033	63786	72540
	43	24316	29480	34645	41143	47642	55288	62934
HCU 777 V/H 306 R/L	27	28602	36827	45052	53576	62100	71968	81836
	32	25637	33673	41710	49756	57802	67003	76203
	35	23858	31781	39704	47464	55224	64024	72824
	43	19114	26734	34355	41352	48348	56080	63812
HCU 7777 V/H 306 R/L	27	36256	46679	57102	67508	77913	89536	101160
	32	32349	42538	52722	62535	72348	83163	93979
	35	30005	40049	50094	59551	69009	79339	89670
	43	23755	33420	43085	51595	60104	69142	-
HCU 888 V/H 306 R/L	27	37285	47211	57137	67399	77661	89085	100508
	32	33824	43442	53060	62549	72037	82576	93115
	35	31747	41180	50614	59638	68663	78671	88679
	43	26208	35150	44091	51878	59664	68257	-
HCU 8888 V/H 306 R/L	27	46810	59155	71500	83461	95421	108217	121013
	32	42252	54213	66174	77192	88209	99969	111730
	35	39517	51248	62979	37430	83881	95021	106160
	43	32223	43340	54457	-	-	-	-

Performance data in Watts rated at 20oC Return Gas Temperature, 0K Sub Cooling

Compressor		Case Size Drawing	Fansets (230V/1ph/50Hz)			Connection Sizes		Liquid Receiver	Dry Weight	Sound Levels	
FLC	LRA		Number of Fans and Diameter	FLC	LRA	Suction	Liquid			dB(A)*	
(A)	(A)			(A)	(A)	inches	inches	(L)	(kg)	Max*	Min*
3x 8.85	3x 46	H	2x 630 12pl	2.4	3.0	1 5/8	7/8	35.0	751	37	35
4x 8.85	4x 46	H	2x 630 8pl	4.0	6.6	1 5/8"	7/8"	35.0	781	46	42
3x 10.3	3x 49.3	H	2x 630 8pl	4.0	6.6	2 1/8"	7/8"	35.0	822	46	43
4x 10.3	4x 49.3	H	2x 630 8pl	4.0	6.6	2 1/8"	7/8"	35.0	784	46	42
3x 12.8	3x 65.5	H	2x 630 8pl	4.0	6.6	2 1/8"	7/8"	35.0	839	48	44
4x 12.8	4x 65.5	H	3x 630 8pl	6.0	7.2	2 1/8"	7/8"	35.0	826	53	49
3x 13.1	3x 74	H	3x 630 8pl	6.0	7.2	2 1/8"	7/8"	35.0	790	52	48
4x 13.1	4x 74	H	3x 630 8pl	6.0	7.2	2 1/8"	7/8"	35.0	834	52	48
4x 13.1	4x 74	H	3x 630 6pl	8.7	14.4	2 1/8"	7/8"	35.0	971	55	51
3x 15.4	3x 95	H	3x 630 6pl	8.7	14.4	2 5/8"	7/8"	35.0	961	56	51
4x 15.4	4x 95	H	3x 630 6pl	8.7	14.4	2 5/8"	7/8"	35.0	1024	56	51
3x 20.4	3x 118	H	3x 630 6pl	8.7	14.4	2 5/8"	7/8"	35.0	957	56	51
4x 20.4	4x 118	H	3x 630 6pl	8.7	14.4	2 5/8"	7/8"	35.0	1019	56	52

* Noise levels in dB(A) at 10m from the front face of the unit, min noise levels with fan speed control at minimum speed

HDU 'M' Range low noise (8pl) Medium temperature

R404A



(H) 1815 x (W) 2310 x (D)895

Model	Ambient (°C)	Saturated Suction Temperature (°C)						
		-20	-15	-10	-5	0	5	10
HDU 666 V/H 308 R/L	27	23364	28571	33778	40215	46652	54326	61999
	32	21782	26657	31532	37593	43654	50871	58089
	35	20833	25509	30184	36020	41855	48799	55743
	43	18302	22447	26591	31824	37058	43272	49486
HDU 6666 V/H 308 R/L	27	30203	36618	43034	50790	58547	67507	76466
	32	28027	33999	39970	47238	54505	62891	71276
	35	26721	32427	38132	45106	52080	60121	68162
	43	23239	28235	33230	39422	45613	-	-

HDU 'M' Range standard noise (6pl) Medium temperature



(H) 1815 x (W) 2310 x (D)895

HDU 6666 V/H 306 R/L	27	31423	38362	45301	53885	62429	72619	82808
	32	29238	35713	42189	50229	58269	67825	77382
	35	27927	34124	40322	48047	55772	64949	74126
	43	24431	29887	35343	42229	49115	57279	65443
HDU 777 V/H 306 R/L	27	29187	37180	45172	53671	62169	72062	81954
	32	26068	33960	41852	49861	57870	67074	76279
	35	24196	32028	39859	47575	55290	64082	72874
	43	19206	26876	34546	41479	48411	56102	63793
HDU 7777 V/H 306 R/L	27	36749	46990	57231	67606	77980	89601	101221
	32	32695	42782	52868	62641	72414	83205	93996
	35	30262	40256	50251	59663	69075	79368	89661
	43	23776	33523	43270	51720	60171	69135	-
HDU 888 V/H 306 R/L	27	37812	47491	57170	67383	77596	89013	100430
	32	34157	43613	53069	62540	72011	82559	93106
	35	31964	41287	50609	59635	68660	78686	89661
	43	26116	35082	44049	51886	59724	68359	-
HDU 8888 V/H 306 R/L	27	47201	59358	71515	83449	95383	108195	121008
	32	42456	54312	66169	77185	88201	99991	111782
	35	39609	51285	62961	73426	83892	95069	59613
	43	32017	43212	54406	-	-	-	-

Compressor		Case Size Drawing	Fansets (230V/1ph/50Hz)			Connection Sizes		Liquid Receiver	Dry Weight	Sound Levels	
FLC	LRA		Number of Fans and Diameter	FLC	LRA	Suction	Liquid			dB(A)*	
(A)	(A)			(A)	(A)	inches	inches	(L)	(kg)	Max*	Min*
3x 8.85	3x 46	H	2x 630 12pl	2.4	3.0	1 5/8	7/8	35.0	751	37	35
3x 8.85	3x 46	H	2x 630 12pl	2.4	3.0	1 5/8	7/8	35.0	751	37	35
1x 11.4 3x 13.1	1x 74 3x 74	H	3x 630 6pl	8.7	14.4	2 1/8"	7/8"	35.0	971	55	51
1x 16.4 3x 15.4	1x 95 2x 95	H	3x 630 6pl	8.7	14.4	2 5/8"	7/8"	35.0	961	56	51
1x 16.4 3x 15.4	1x 95 3x 95	H	3x 630 6pl	8.7	14.4	2 5/8"	7/8"	35.0	1024	56	51
3x 20.4	3x 118	H	3x 630 6pl	8.7	14.4	2 5/8"	7/8"	35.0	957	56	51
4x 20.4	4x 118	H	3x 630 6pl	8.7	14.4	2 5/8"	7/8"	35.0	1019	56	52

An HCU - HDU may be specified as either a three or four compressor unit, with either two or three condenser fans. Any combination of HT/LT compressors may be chosen. The duty of the compressors must be matched with the performance of the condenser coil, which is given in the table below. Any combination of compressors may be chosen from the table on page 123 showing the range of high and low temperature models.

Compressor selection can be made using Copeland's Select software program or product literature which is available through GEA Searle/ Dawmec. Alternatively, GEA Searle's applications team would be pleased to make the required selections on your behalf.

*** Typical noise is based on a unit with four ZB45 (6HP) compressors.**

	No. Fans & air flow	R404A Coil duty (kW)				Typical noise dBA@ 10m (*)	
		8 KTD	11 KTD	13 KTD	15 KTD	Fan speed	
						Max	Min
12 Pole	2 fan H & V	19.86	27.31	32.27	37.24	39	33
	2 fan R	N/A	N/A	N/A	N/A		
8 Pole	2 fan H & V	31.69	43.85	51.82	59.79	46	42
	20 fan R	26.05	35.82	42.34	48.85		
	3 fan R	38.51	52.95	62.57	72.20	48	44
	3 fan R	27.82	38.25	45.21	52.16		
6 Pole	2 fan H & V	40.49	55.67	65.80	75.92	54	49
	20 fan R	36.98	50.84	60.09	69.33		
	3 fan H & V	48.29	66.40	78.48	90.55		
	20 fan R	44.12	60.66	71.69	82.72	56	51

* Noise levels in dB(A) at 10m from the front face of the unit, min noise levels with fan speed control at minimum speed

1. Fansets : 6, 8, 12 pole speed
2. Controls Access Panel
3. Compressor access panels
4. Forklift lifting point
5. Condenser coil access panels





1. Suction and discharge vibration eliminators

2. Multiple scroll compressors including rotalock valves



1. Individual compressor oil return shut-off valves

2. Individual compressor oil float regulators

3. High pressure combined coalescing separator/ reservoir complete with replaceable filter



1. Receiver outlet rotalock valves

2. 35 litre liquid receiver

3.3-way valve for filter bypass for ease of core changes

4. Liquid line sight glass

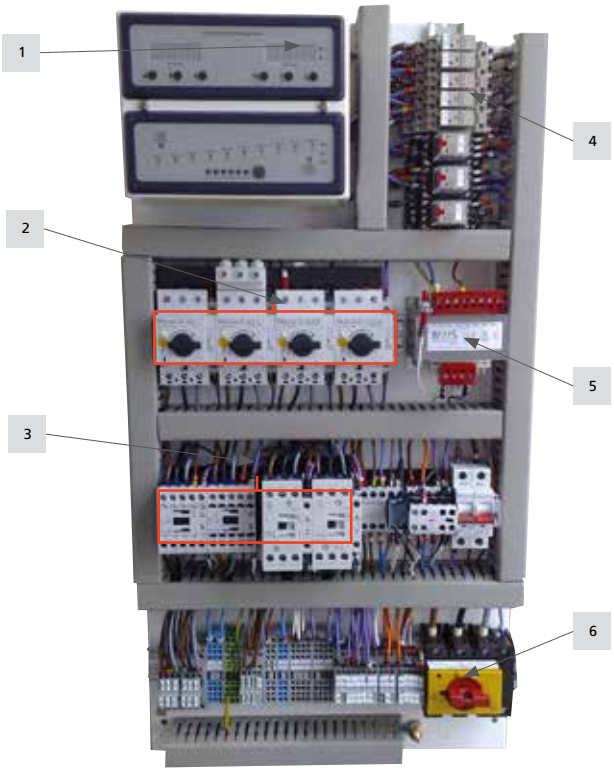

1. Compressor step controller

2. Compressor overloads/ manual motor starters

3. Compressor contactors

4. Fault relays

5. 24 volt transformer

6. Mains isolator complete with 100amp auxillary connection for customer use

HCU - HDU Dimension drawings

HCU - HDU Horizontal air flow 2 & 3 fan models

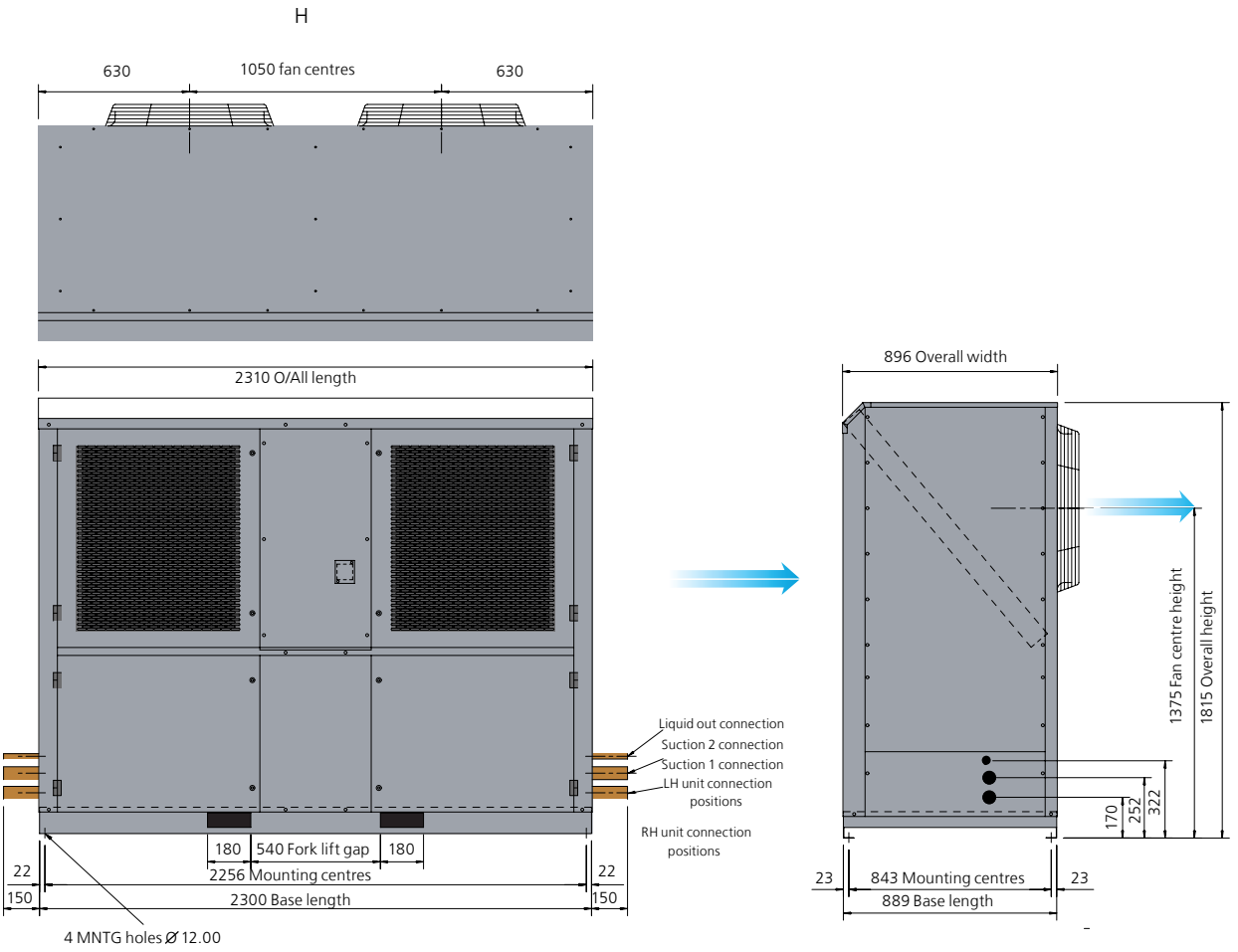

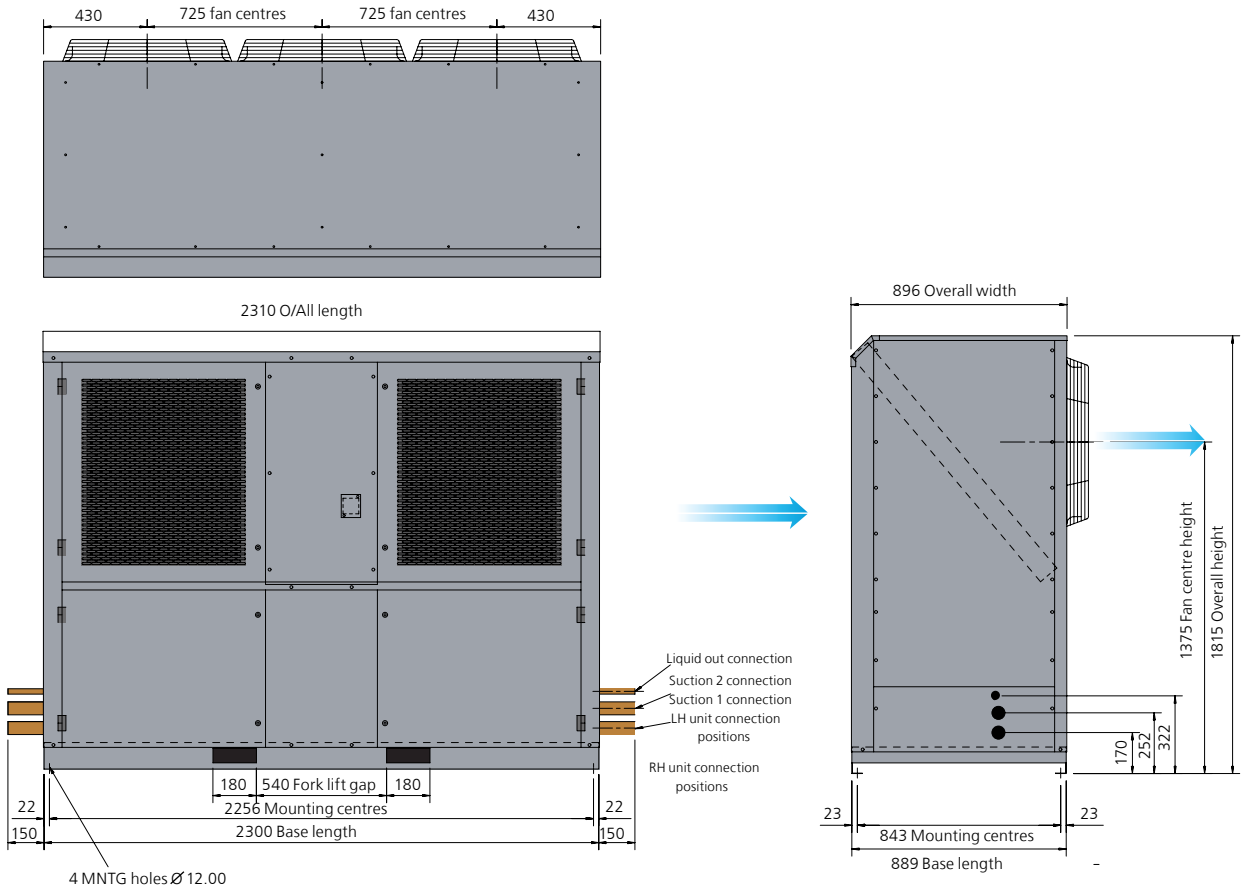

HCU - HDU Vertical air flow 2 & 3 fan models

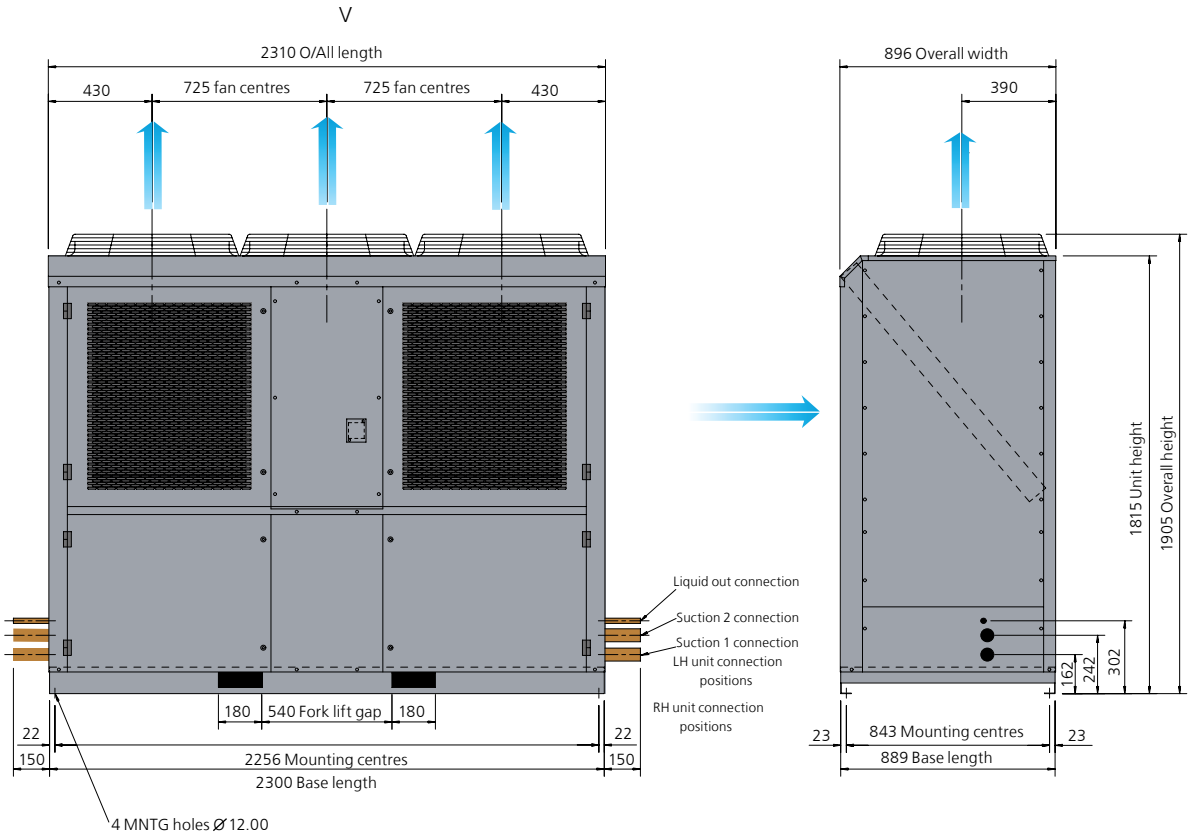

HCU - HDU Recirculatory air flow 2 & 3 fan models

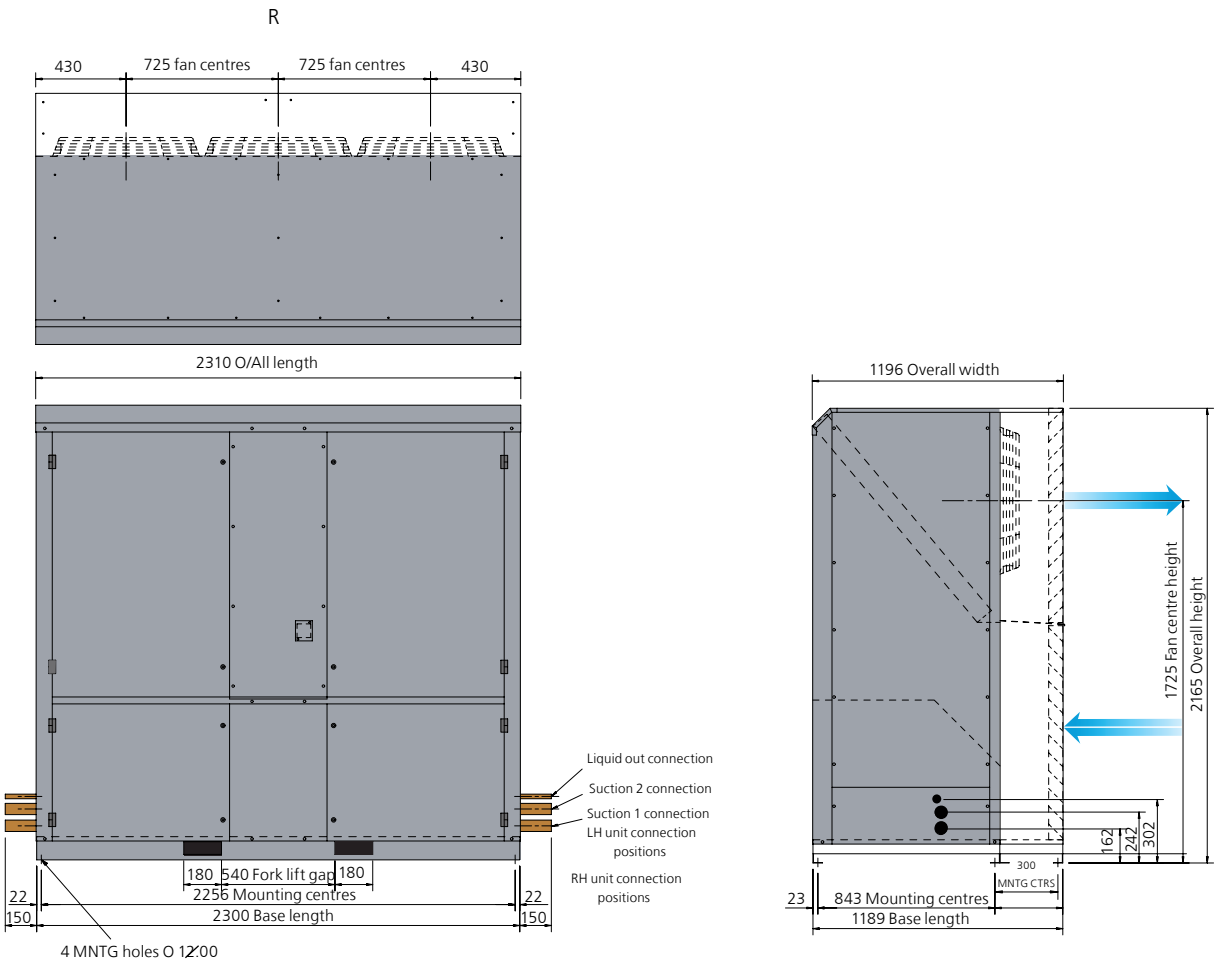

New generation of fans and motors
Combined expertise in heat transfer

Ziehl-Abegg Fe2 Owlet and EC technology plays an integral role in GEA Condensers and Dry Coolers providing effective capacity control whilst retaining high energy efficiency and low noise levels, all at a competitive price. These speed control fansets can provide significant benefits over alternative motors and are ideally suited to the following application areas:- Commercial refrigeration, Building HVAC, Industrial refrigeration Process Cooling, Power Generation and Convenience Stores. GEA has the technical expertise to advise and select products for any application where energy efficiency, low noise and cost effective solutions are required. EC (Electronically Commutated) technology is a tried and tested technology which has been utilised by for a number of years.

The Adantages of EC Fansets

- Reduced energy usage and Low operating cost, providing short pay-back periods.
- Continuous speed control across the full operating range.
- Low noise compared to a similar unit fitted with step control.
- High efficiency across the full operational range.
- Simple to connect to AC mains supply.
- High efficiency across the full operational range to an asynchronous motor and 3 year warranty.
- Operation at peak load via the over speed function is
- pre-programmed into the control system.

The motors used in EC fansets are simply brush-less DC motors with characteristics similar to a “shunt” motor. Unlike the conventional motors where an AC current in the stator induces the magnetic field in the rotor, EC motors use permanent magnets, so the current in the stator is used solely to generate the torque not secondary magnetic fields. Therefore, with fewer losses the EC motor is inherently more efficient than the AC motor. Conventional DC motors use brushes to switch the supply and these wear over time; the new generation of EC motors use commutation electronics to sense the rotor position and switch supply. As switching is undertaken electronically with no physical contacts there is no wear and so reliability is increased.

High Energy-saving potential

The cost of energy has nearly tripled in recent years and is predicted to rise in the future. Rising energy costs means energy efficiency is becoming a key factor within industry issue and is rising in importance on end-user criteria. A GEA unit equipped with EC technology has a high energy saving rating, which in turn, translates into lower running costs.

The energy savings gained by relying on EC technology translates into short payback times when measured against the initial procurement costs. Moreover, the maintenance free and exceptionally high service life results in additional big savings.



High efficiency and low noise

The EC motor has a high efficiency at every speed. At nominal speed, there is energy saving of around 10% when compared to conventional AC options. At reduced speed the saving is substantially more pronounced. Where noise levels are a key consideration, a unit with EC technology helps by reducing perceived noise when compared to a similar unit with step control.

Fail-safe safety

Refrigeration plants operate 24 hours a day, therefore, both energy costs and fail-safety are crucial factors. EC motors are equipped with several fail-safe features helping to ensure disruption is minimal in the event of a failure. Each motor is fitted with an individual power unit, unlike traditional units with a single inverter. Should an EC fan inverter fail the other fans on the unit will remain fully functioning and in most cases compensate for the loss of one fan. In addition each fanset has internal motor protection.

The Adantages of EC Fansets

- Integrated protective features; Phase failure detection; Over-current and temperature.
- Networked and bus-linked installations are easy to realise (RS485).
- Night time set back at night, operation at extremely low noise can be achieved through stepless speed control.
- Built in fail-safe features, including individual integrated electronics, self-regulating motors and internal motor protection.

GEA Searle - Terms and Conditions

1. GENERAL

Special attention is drawn to the Warranty.

The following words shall have the following meanings in these Conditions.

(a) The "Buyer" is the person firm or company with whom the Seller has entered into the Contract.

(b) The "Conditions" shall mean the terms and conditions set out below. (c) The "Contract" is the agreement (as referred to in clause 2) to supply particular Goods. (d) The "Goods" are the goods sold by the Seller to the Buyer. (e) The "Seller" is GEA Searle LTD.

(f) "Warranty" shall mean the warranty to be given to the Buyer pursuant to clause 14. (g) In "Writing" is any memorandum or letter signed on behalf of the Seller by a duly authorised representative. In the case of a letter sent to the Buyer the Seller shall be entitled to assume that its terms are agreed unless notified to the contrary in writing within 7 days.

2. THE CONTRACT

(a) The Goods are sold subject to the Conditions which shall supersede all other terms and conditions, representations or undertakings made by the Buyer or the Seller or otherwise and nothing said or written during the course of negotiationsbetween the Buyer and Seller shall have contractual or other legal effect unless agreed in accordance with the Conditions. (b) The Contract shall not be varied unless the Seller expressly agrees the variation in Writing or the Conditions expressly provide otherwise. (c) The giving of any delivery instructions, the acceptance of or payment for the Goods or any conduct in confirmation of the transaction hereby contemplated shall constitute unqualified acceptance by the Buyer of the Conditions. d) The buyer can only cancel the contract with written consent of the seller. Cancellation charges may be imposed.

3. PRICE

Unless otherwise agreed in Writing the price of the Goods shall be calculated in accordance with the Seller's price list in force at the date of delivery of the Goods.

4. PAYMENT

(a) Payment is due by the end of the month following the month during which risk passed to the Buyer, unless other terms have been agreed in Writing. These terms of payment must be strictly observed. If the Buyer is in breach of the Contract then all payments shall become immediately due and payable. (b) If any sum due hereunder or any other sum due to the Seller is not paid in full by the due date or if before such date the Seller believes that the Buyer is unable or unwilling to make such payment in full then the Seller shall have the right either to suspend delivery of the Goods pending payment of such sums or to terminate the Contract forthwith. (c) Interest shall be payable by the Buyer from the date by which payment should have been made till the date of payment (both before and after judgement) on the unpaid amount on a daily basis at the rate of 4% per annum above the base lending rate of Danske Bank from time to time in force unless otherwise specified. (d) The Buyer shall not be entitled to withhold payment of all or any of the purchase price while any claim in relation to the Goods or other dispute is being investigated by the Seller and without limitation no deduction shall be made by the Buyer in respect of any set-off or counter-claim howsoever arising.

5. DELIVERY

(a) The place of and the date of delivery shall be as agreed between the Buyer and the Seller. However the date for delivery is the Seller's best estimate based on present information and subject to sub-clause (b) below The Seller shall not be liable for delay in delivery in any circumstances whatsoever (even if caused by the negligence of the Seller its servants or agents) nor for any loss, damage or expense which the Buyer may suffer by reason of such delay. (c) If the date of delivery is important to the Buyer the Seller is prepared to provide a definite date of delivery provided that the date and a limit on the Seller's liability under this sub-clause have both been agreed in Writing as a variation to the Contract.

6. RISK, ACCEPTANCE AND IN STORAGE

(a) The risk in the Goods shall pass to the Buyer on the sooner of the Buyer paying the price in full or the Buyer taking delivery of the Goods or the Seller notifying the Buyer that the Goods are ready for delivery and the Buyer having failed to take delivery of the Goods for whatever reason. (b) Without limitation after risk has passed to the Buyer if the Goods or any item there of are lost, damaged or destroyed from any cause whatsoever (including the negligence of the Seller, its servants or agents) whether or not the Goods are still in the possession of the Seller then the Buyer shall remain liable to pay the price of the Goods in full and if the Seller repairs the Goods the Buyer shall pay the reasonable cost of repairing the Goods. (c) Any change in Delivery Time or the collection date agreed upon between the Seller and the Buyer following the award of the contract or the placing of the order for the Goods by the Buyer will not alter the Seller's production scheduling operations and the Seller shall be entitled, for Goods actually completed and stored by the Seller for delivery or collection after the end of the Delivery Period originally agreed upon, to a storge levey charge equal to zero decimal five percent (0.5%) of the contract value of the Goods so stored for each week of storage commenced untill said Goods have actually been delivered or collected provided howerver that no such storage charge shall be owed by the Buyer if the delay in delivery or collection is due to any reason for which the seller is liable. (d) The seller may in some instances waiver the storage charge if the buyer shall agree to be invoiced and pay for the goods.

7. TITLE TO THE GOODS

(a) Property in the Goods shall not pass to the Buyer until the Buyer has paid to the Seller the whole of the price of the Goods in full and any other payments due from the Buyer. (b) Until the payments referred to in sub-clause (a) above have been made in full the Buyer shall hold the Goods as fiduciary agent for the Seller and shall mark the Goods with an indication that they remain the Seller's property, and they shall be kept separate and identifiable from any other products in the Buyer's possession and shall be returned to the Seller upon request and all the incidence associated with a fiduciary relationship shall apply. (c) Without prejudice to any of the Seller's other remedies the Seller shall have the right with or without prior notice at any time to retake possession of the whole or any part of the Goods (and for that purpose shall be granted an irrevocable licence to go upon any premises occupied by the Buyer or which the Buyer is entitled access to) and to dismantle the Goods or detach the Goods from any items in which they may have been incorporated. (d) The Buyer shall indemnify the Seller against all costs and liabilities which the Seller incurs in retaking possession of the Goods (or any part thereof) or in exercising any of its rights under this Clause including without limitation any liability in respect of any damage (including damage caused to such premises in such retaking of possession and removal of goods) which it was not reasonably practicable to avoid. (e) If any of the Goods supplied by the Seller are incorporated or used as material for other goods before title has passed to the Buyer the property in the whole of such goods shall be and remain with the Seller until such payment has been made. Any sale of such goods by the Buyer shall take place upon the basis that the buyer shall hold on trust for the seller with effect from the date of receipt of the sale proceeds by the Buyer such proportion of those proceeds as is equal to the outstanding price payable by the buyer to the Seller for the Goods.

8. ACCEPTANCE OF GOODS

Unless the Seller is notified to the contrary in writing within 3 days of the date of actual delivery the Goods shall be deemed to have been accepted by the Buyer as being in good condition and in accordance with the Contract.

9. FORCE MAJEURE

(a) Without prejudice to the other terms of the Conditions the Seller shall not be liable if manufacture or delivery or installation is prevented, hindered or delayed by reason of strikes, sit-ins, trade disputes, lock-outs or any other actual or threatened industrial action or by difficulty in obtaining labour, plant, materials or bought in components or by breakdown of plant or machinery (including transport) or by interruption of power supplies, or by fire or by legal action by a third party (whether or not any of the aforesaid are caused by the negligence of the Seller, its servants or agents) or by reason of any circumstances outside the Seller's control which shall include, but not be limited to national emergency, war, civil riot, intervention by Government and all other cases of force majeure. (b) If the manufacture or delivery of the full quantity of Goods due under the Contract is prevented, hindered or delayed by reason of any circumstances within sub-clause (a) for a period greater than 3 months after the agreed delivery date then both the Seller and the Buyer shall be released from their respective obligations in respect of any goods which have not been delivered by that time.

10. PACKING

(a) Where specified in the Seller's sales literature the cost of the Goods will include the cost of packaging. Such packaging shall be non-returnable and suitable for the protection of the Goods under normal transport conditions and for dry indoor storage in temperate climates for up to 3 months from the date of such delivery provided that the packaging is not damaged or disturbed. (b) All other goods will (unless otherwise agreed in Writing) be delivered by the Seller without packaging. Where the Seller so agrees the packaging will be as agreed and if not specified will be non-returnable and suitable for the protection of the Goods under normal transport conditions and for dry indoor storage in temperate climates for up to 3 months from the date of such delivery provided that the packaging is not damaged or disturbed. The Seller shall be entitled to make an additional charge as agreed with the Buyer or (if no charge has been agreed) a reasonable charge for packaging. The additional charge will be payable by the Buyer at the same time and on the same terms as the price of the Goods.

11. TRADE NAMES AND TRADE TERMS

(a) The Buyer undertakes not to hold himself out in any circumstances or in any manner whatsoever as having authority to sell, service, maintain or deal with the Goods as agent or dealer or other authorised representative of the Seller. (b) In particular and without prejudice to the provisions of sub-clause (a) the Buyer undertakes not to use or reproduce any trade name or registered trade mark of the Seller on goods, premises, vehicles, letter headings and other stationery, sales literature or in any way whatsoever and not to do or authorise to be done any infringing act to which the Trade Marks Act 1994 applies. (c) The Buyer's undertakings under this Clause are conditions of this Contract so that any breach thereof shall entitle the Seller to terminate the Contract and to recover damages in respect of all loss, damage and expense occasioned thereby. The Seller at its option shall be entitled to recover the profit made by the Buyer during the period of the breach from sales, servicing, maintenance and other dealings with goods manufactured by the Seller. (d) Notwithstanding the terms of the Conditions no document purporting to authorise the Buyer to do any act which would otherwise be a breach of the Buyer's undertakings under this Clause or purporting to consent thereto on behalf of the Seller shall be binding on the Seller unless it is a formal licence agreement bearing the Seller's corporate seal.

12. DRAWINGS, PRINTS AND SPECIFICATIONS

(a) Any technical drawings, prints and specifications supplied by the Seller under or in connection with a quotation or the Contract shall remain the property of the Seller who shall reserve the copyright, design right and any registered design right therein. The Buyer shall not copy them or communicate their contents to any third party without the Seller's consent (which consent shall not be unreasonably withheld) and shall comply with the Seller's reasonable requirements as to their use, return and otherwise. (b) The property in the design of the Goods shall (subject to any existing rights of any third party or the Buyer in any design or invention incorporated or used in the design of Goods) remain the exclusive property of the Seller and neither the buyer not any agent contractor or other person authorised by the Buyer nor any other person, firm or company shall at any time make use of the design or any part thereof. (c) The Seller gives no warranty or indemnity in respect of any actual or alleged infringement of any patents, registered designs, design copyright, or any other industrial property right relating to the Goods.

13. DESCRIPTION OF GOODS

(a) Illustrations, photographs, descriptions (including descriptions relating to technical performance, capacity, output, consumption and dimensions) and general literature relating to the Goods are intended as a general guide only and such material shall not form part of the Contract. The Goods will not necessarily correspond in all respects with the goods shown in those illustrations and photographs or such descriptions or general literature. Without limitation the Seller reserves the right to make without notice to the Buyer any improvement or alteration in the material, specification, dimensions or design of the Goods which it thinks reasonable or desirable or which it is required to make by law and such improvement or alteration shall be deemed to have been accepted by the Buyer and the Seller as a variation to the Contract. (b) The Seller can provide goods which are suitable to meet the Buyer's purpose or which will meet specified technical performance provided that the Buyer provides written details of its requirements and obtains the Seller's advice (as to which goods will be suitable) in Writing. Unless the Seller has agreed in Writing to provide equipment for a specified purpose or of a specified technical performance the Buyer shall be deemed to have selected the Goods without having made its purpose or requirements known to the Seller.

14 WARRANTY

(a) Subject to clause 16 the Seller warrants to the Buyer that as from the date of supply and for a period of twenty four months from date of dispatch (as to which the Seller's determination is final) the Seller will free of charge replace or repair any part or parts thereof proved to the Seller's satisfaction to be defective owing to faults in workmanship of the Seller or materials comprised in the Goods. All labour, travel and carriage costs involved in effecting such replacements or repairs will be borne by the Buyer. (b) If the Buyer requires a warranty greater than that set out above any such warranty to be effective must be in writing and signed by either the Secretary or a Director of the Seller and shall in any event be limited to the amount that the Seller can recover under the product liability insurance policies held by the Seller at the date of the Contract. (b) If the Buyer requires a warranty greater than that set out above any such warranty to be effective must be in writing and signed by either the Secretary or a Director of the Seller and shall in any event be limited to the amount that the Seller can recover under the product liability insurance policies held by the Seller at the date of the Contract. (c) Save as expressed in this Clause the Seller shall be under no liability for any personal consequential or other loss or damage of whatsoever kind or howsoever caused as a result of any goods supplied or work done being defective or not in accordance with any order or as a result of anything done or omitted in connection with any work done or omitted to be done by the Seller including any breach by the Seller of any fundamental term of any order and the Seller's liability under this Clause shall be in lieu of and to the exclusion of any liability, condition, guarantee, warranty, term undertaking or representation whether express or implied, statutory or otherwise and shall in any event be limited to the value of the Goods to which any claim relates or the amount received by the Seller in relation to the Goods under any product liability insurance held by the Seller at the date of the Contract. (d) Nothing contained in the Clause shall exclude:-

(i) any liability for breach of the Seller's implied undertakings as to title

(ii) where the Buyer deals as a consumer (as defined by the Unfair Contract Terms Act 1977) any liability for breach of the Seller's implied undertakings as to conformity of goods with description or sample or as to their quality or fitness for a particular purpose.

(iii) any liability arising from the Seller's negligence causing death or personal injury.

15. EXCLUSIONS

The Warranty shall not apply to:-

(a) Any defect which in the opinion of the Seller arises by reason of misuse, misapplication, neglect or accident occurring after risk has passed to the Buyer. (b) Any defect not notified to the Seller or its authorised distributors or dealers within 3 working days of the Buyer having become aware of such defect. (c) Any equipment which shall in the opinion of the Seller have been improperly installed, serviced, repaired or altered (other than by the Seller) or in or to which any part not manufactured or sold by the Seller has been fitted. (d) Goods not of the Seller's manufacture in which case the Buyer is entitled only to such benefit as the Seller may receive under any warranty given in respect thereof. (e) Any equipment on which service has been carried out by anyone other than the Seller or any approved service agent. (f) Any equipment installed or situated outside Great Britain, Isle of Man, Northern Ireland, Eire and the Channel Islands without the Seller's consent in Writing.

16. TERMINATION OF THE CONTRACT

If the Buyer becomes insolvent or goes into bankruptcy, receivership, administration or liquidation or enters into any voluntary arrangement with its creditors or commits a breach of the Contract or any other contract with the Seller or has any process of distress or execution levied upon its goods or the Seller reasonably considers that any of the above events is likely to occur then the Seller may forthwith on written notice to the Buyer terminate the Contract without incurring any liability to the Buyer and without prejudice to the Seller's right to recover the Price and / or damages for any breach of the Contract by the Buyer.

17. MISCELLANEOUS

(a) The Contract is between the Seller and the Buyer as principals and is not assignable without the Seller's consent.

(b) Each of the Clauses and sub-clauses of the Conditions shall be construed as separate and severable.

(c) None of the provisions of any of the clauses or sub-clauses of the Conditions shall in any way limit any of the other clauses or sub-clauses of the Conditions. (d) The law governing the Contract shall be the law of England. Any disputes arising out of or in connection with the Contract shall be submitted to the jurisdiction of the English Courts, except that the Seller may elect and be entitled to proceed in Scotland or Northern Ireland or any foreign jurisdiction wherever proceedings may lawfully be brought against the Buyer. (e) The Buyer recognises that the Conditions and (without limitation) the limitations of liability contained in the Conditions are reasonable in that the prices quoted by the Seller are dependent upon such limitations being incorporated in the Contract and because greater liability can be accepted if expressly agreed in Writing in accordance with the Conditions. (f) Any notice may be served by either party on the other by leaving it at or sending it by post or facsimile to the address of the party contained in the Contract. Such notice shall be deemed to be served if by hand when delivered if by facsimile when sent and if by first class post two working days after posting.

GEA Searle - Warranty Procedure

For products and services supplied directly by GEA Searle or Dawmec, you should follow the procedure outlined below. For products supplied via a wholesaler, distributor or agent, your warranty agreement is with them and therefore you should supply the same information as outlined below to your contact.

Warranty Procedure

This warranty applies to all units detailed in this list price and, unless otherwise stated in product literature or specific contracts, provides for a manufacturer's guarantee of twenty four months from date of dispatch against faults in workmanship or materials.

When submitting a warranty claim, a claim number will be supplied. Please give the following information in order to process your claim quickly and efficiently:

- Customer's original reference number job / order number.
- GEA Searle's job number / advice note number.
- Type of unit and serial number.
- Date of installation.
- Details of defect.

when providing details of the defect, please give as much information as possible, ie.

- Was the unit satisfactory on delivery?
- Frequency of fault (continuous / intermittent)
- Is the unit leaking ? (+ location of leak)
- Items manufactured by GEA Searle :

No work should be undertaken to resolve the problem either by the customer or a 3rd party until approved by Searle – failure to do so could invalidate the warranty.

The item may be replaced or rectified if the guarantee claim is valid.
For items that have been installed, GEA Searle have the right to decide if rectification on site is suitable and who should undertake the work or whether to return / replace the unit(s). For items where GEA Searle decides to replace, the original faulty item must be returned. All items which are returned will be inspected.

If the guarantee claim is not valid the customer will be advised and further instructions requested, either to return the item or to issue an official order to replace or rectify the item.

If you require a replacement product the buyer will be asked to supply a purchase order, when the unit has been returned and evaluated, the buyer will be notified by GEA Searle if the claim is valid.

Items NOT manufactured by GEA Searle:

- The item will be replaced and the customer will be invoiced
- The item will be returned to the supplier for evaluation.
- If the claim is valid the credit received from the supplier will be passed on to the customer.

Items supplied by Dawmec

- The item will be replaced and the customer will be invoiced
- The item will be returned to the supplier for evaluation.
- If the claim is valid the credit received from the supplier will be passed on to the customer.

We live our values.

Excellence • Passion • Integrity • Responsibility • GEA-versity

GEA Group is a global engineering company with multi-billion euro sales and operations in more than 50 countries. Founded in 1881, the company is one of the largest providers of innovative equipment and process technology. GEA Group is listed in the STOXX® Europe 600 Index.

GEA Heat Exchangers

GEA Searle

20 Davis way, Newgate Lane, Fareham, Hants, PO14 1AR
Phone: +44 (O) 1329 823344, Fax: +44 (0) 1329 821242
searle.hx.uk@gea.com, www.gea-heatexchangers.com

© GEA Group AG. All rights reserved. Cooler & Condensing units Issue 4 March 2014