CHANGING
GEA HEAT EXCHANGERS

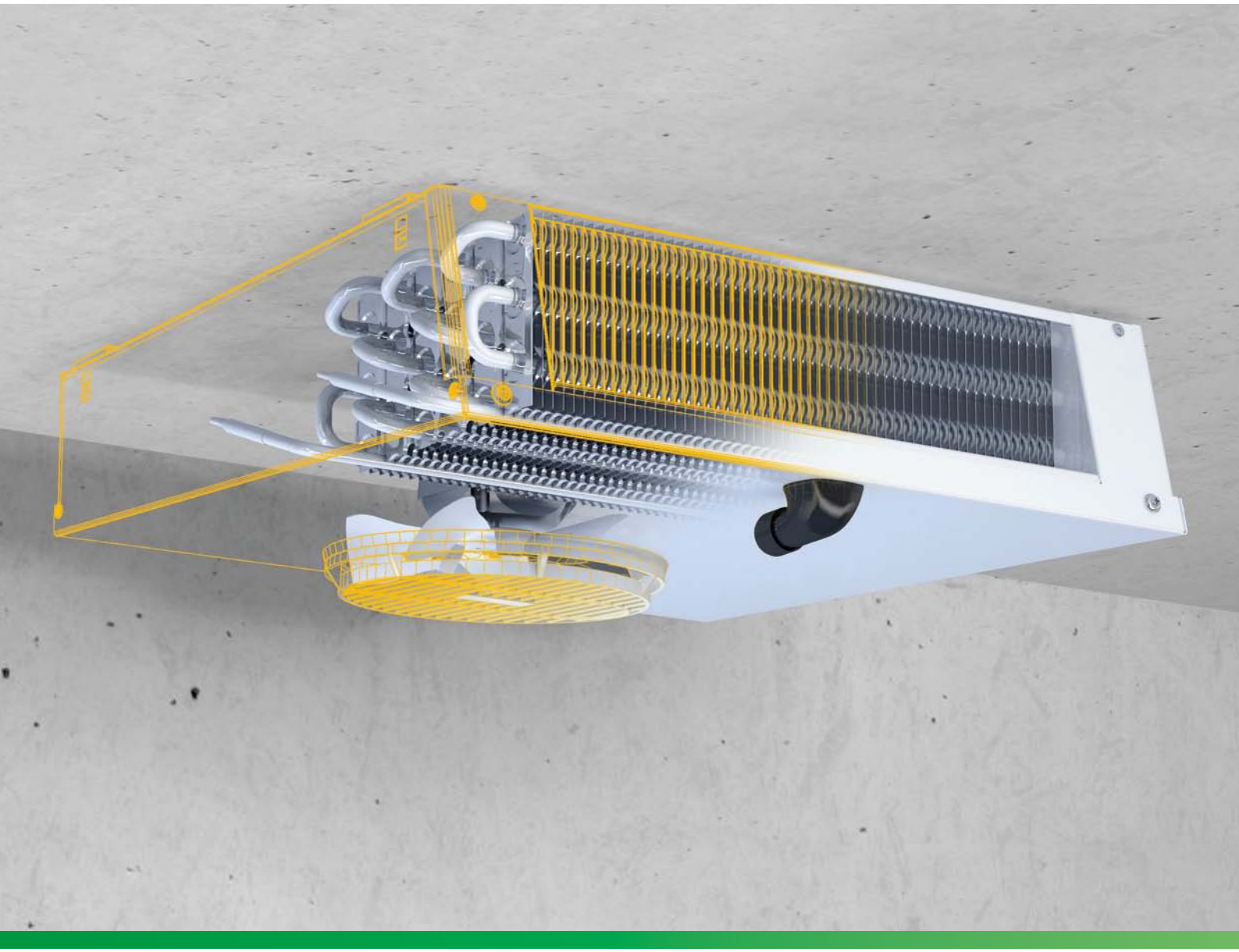

Küba *junior* DF

Compact ceiling mounted air cooler, fully coated for hygiene

Küba *junior* DF

Compact ceiling mounted air cooler, fully coated for hygiene



For extreme applications as well



Best air guidance

Completely powder-coated



Extremely space-saving

Type designation code

1	2	3	4	5	6
DF	B	E	02	3	E

1 Model range designation
2 Fin spacing
3 Electric defrost
4 Size
5 Number of fans
6 Generation Code

Küba junior DF



Capacity range (for SC2)

0.4 kW 2.0 kW

Temperature range (t_{L1})

-25°C 0°C +20°C

Number of fans

to

Content

Application benefits for contractors and operators 4

Basic version 6

Technical data – DFA (E) 8

Technical data – DFB (E) 8

Dimensions, weights, electric defrost, drain 9

Variants 10



Applications

- Cooling of bottles
- Storage for instant and deep frozen meals
- Storage of ice cream
- Cooling of packaged and open products

Küba *junior* DF

Application benefits for contractors and operators

Just filling up belongs to yesterday. Filling stations have long since turned into neatly sorted fresh food shops, open 24/7.

Even snack bars and kiosks are reporting a rising demand for beverages and food. This is why they are constantly increasing their range of stored foodstuffs. This demands competent short-time storage of ready and pre-packaged food – a requirement which conventional refrigerators and chest freezers cannot meet, neither in terms of energy nor cooling technology.

Beverages, dairy products and packaged foodstuffs have different requirements – in terms of storage temperature, for instance.

Under these conditions, economical and hygienic storage of fresh products is feasible only in small cold stores.

The *junior* DF is the perfect solution for keeping salads, fruit, vegetables, meat and sausages fresh in kitchens, canteens and the retail trade. Its full hygiene coating renders the unit particularly suitable for areas where the demands for hygiene are strict.

The Küba *junior* DF is a star in small cold stores – for cooling packaged as well open goods.

Küba *junior* DF

from the Küba Green Line production range

The compact Küba *junior* DF is designed especially for cooling foodstuffs with due regard for the requisite safety:

- The condensate tray has an optional horizontal or vertical drain.
- The high-grade powder coated aluminium housing offers ideal corrosion protection. An integrated air baffle ensures optimal airflow.
- The drip tray can be folded down for easier cleaning and maintenance.
- Its low construction height and the condensate drain sloping towards the back allow maximum utilisation of the cold store.

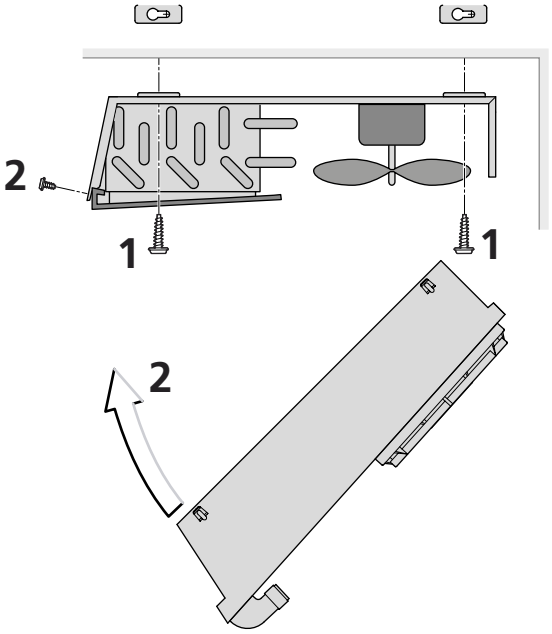

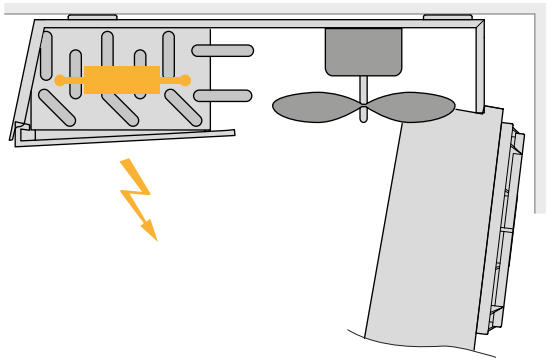

The Küba *junior* DF, despite its compact dimensions, is not to be trifled with. It ensures that the necessary storage temperature is maintained throughout by its excellent distribution of air – no warm puddles anywhere to spoil the foodstuffs.

Its large cooling area ensures long cooling periods and infrequent defrosting. Under extreme conditions such as in deep freeze compartments and when goods are removed frequently, a supplementary electrical heater may be retrofitted to ensure smooth operation.

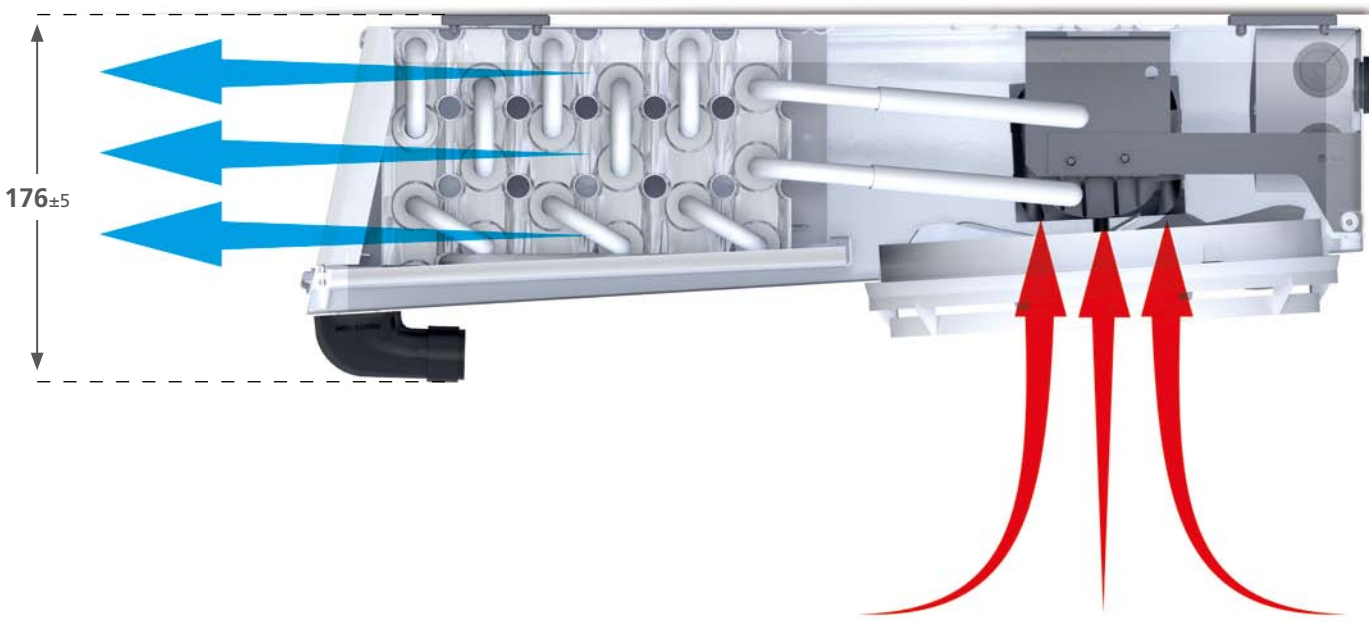

Küba *junior* DF

Basic version



Casing

- Aluminium,
  Sendzimir zinc-plated steel, smooth
- High-grade powder coating
  RAL 9018 papyrus white
- Food-safe
- Easy to clean
- Best quality powder coated edges
- Drip tray can be folded down and unclipped
- Double drip tray
- Height only 180 mm (incl. drain)



Heat exchanger for direct expansion

- Heat exchanger with staggered tube system consisting of special copper tubes, drawn oxygen-free and inner finned according to DIN EN 12735-1,2 with 10 mm (1-2 mot.) and with 12 mm (3 mot.) diameter and closed, pure-aluminum HFE fins
- Internal cleanliness according to DIN 8964
- Fin spacing:
  A = 4.5 mm | B = 7 mm
- Fins flared to form-fit the core tube
- Highly effective heat transfer and compact design
- Tubing: Cu-Special
  Fins: Aluminium
  End plates: Aluminium
- Completely powder-coated (hygienic paint)



Electric defrost

- Heaters with CrNi steel sleeve
- Vapour-tight connections
- Mains voltage: 230 V-1/400V-3-Y
- Wired ready to connect in junction boxes
- Optimized tubular heater configurations ensure fast and even defrosting
- Fins flared to form-fit the core tube
- Aluminium heat pipes that ensure excellent heat transfer to the fins and thus effective defrosting cycles with optimized service life.



Fans (EC)

- Fans are wired to an internal distribution box
- Electronic motor protection
- Permissible motor ambient temperatures: -40° C bis +50° C
- Available fan diameter: 200 mm
- Protection class: IP54; Insulation class: H
- 230 V 50/60 Hz
- Operating values are the values of the built-in motor at +20 °C, with an unobstructed air flow and a dry surface
- Controller:
  Phase control ☐
  Transformer ☐
  Delta/star ☐
  Frequency converter ☐
  Please observe the manufacturer's information!

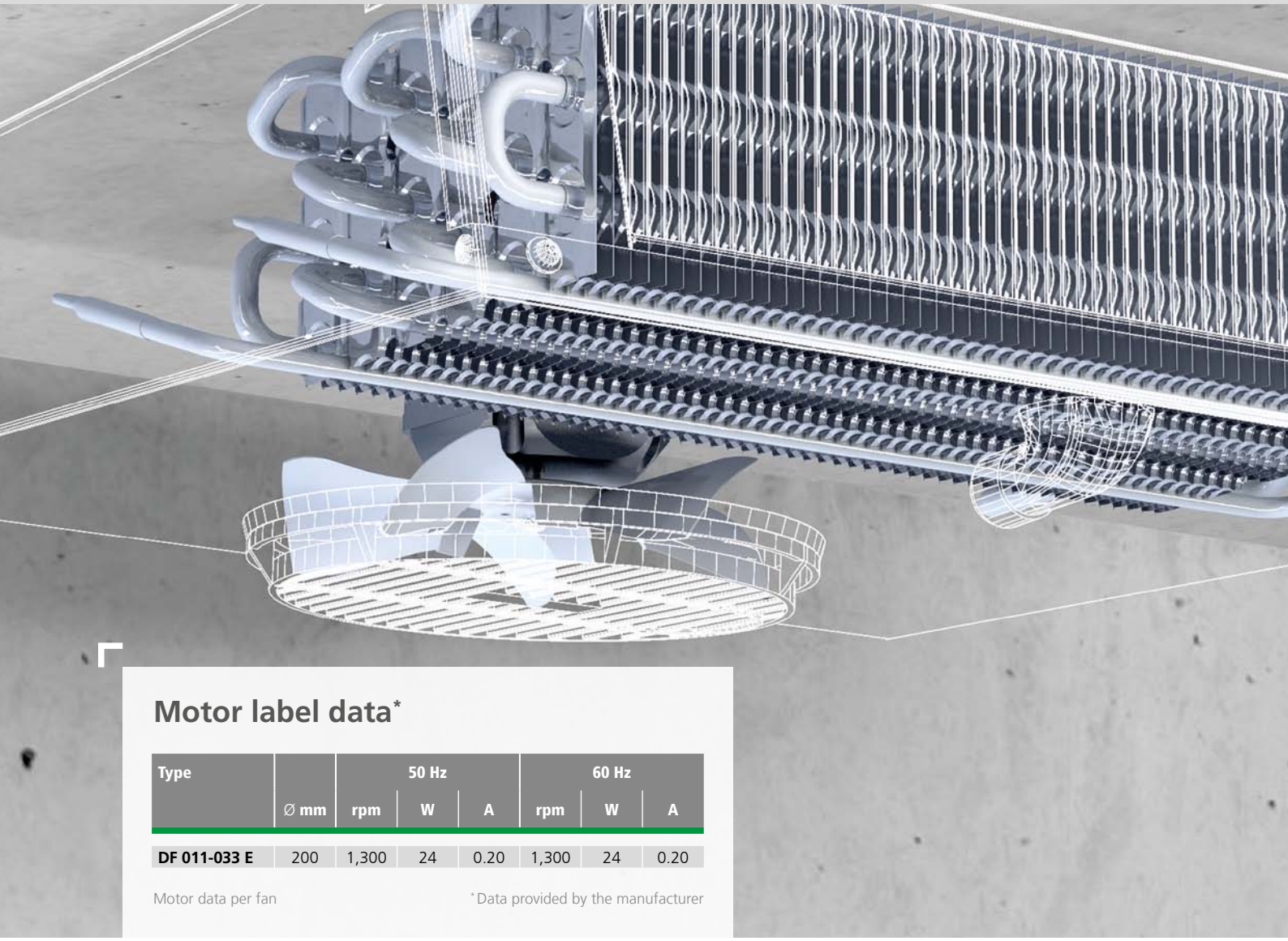

Motor label data*

Type		50 Hz			60 Hz		
	Ø mm	rpm	W	A	rpm	W	A
DF 011-033 E	200	1,300	24	0.20	1,300	24	0.20

Motor data per fan

*Data provided by the manufacturer

Küba *junior* DF

Technical data – DFA (E)

4,5 mm

Type	Rating Q_0 at 50 Hz. DT1. R404A		Cooling surface	Air flow	Air throw ***	Tube volume	Connections		Sound	Fans (Operational values at 50 Hz)				
	SC2	SC3					Inlet	Outlet	L_{WA}	Blade	Current	Per Fan		
	kW	kW	m^2	m^3/h	m	dm^3	Ø mm	Ø mm	db (A)	Ø mm	230 ± 10% V-1 50 Hz	rpm	W	A
DFA 011 E	0.46	0.37	2.1	250	5	0.3	10 x1.0*	10 x1.0*	62	200	230 V -1	1,310	9	0.07
DFA 021 E	0.56	0.45	2.8	290	5	0.4	10 x1.0*	10 x1.0*	62	200	230 V -1	1,310	9	0.07
DFA 031 E	0.67	0.54	4.1	260	5	0.6	10 x1.0*	10 x1.0*	62	200	230 V -1	1,310	9	0.07
DFA 022 E	1.12	0.89	5.6	580	6	0.8	10 x1.0*	10 x1.0*	65	200	230 V -1	1,310	9	0.07
DFA 032 E	1.34	1.07	8.2	520	6	1.2	10 x1.0*	10 x1.0*	65	200	230 V -1	1,310	9	0.07
DFA 023 E	1.68	1.34	8.4	870	9	1.2	10 x1.0*	10 x1.0*	67	200	230 V -1	1,310	9	0.07
DFA 033 E	2.01	1.61	12.3	780	9	1.8	10 x1.0*	10 x1.0*	67	200	230 V -1	1,310	9	0.07

Subject to modification.

Standard condition	t_{L1}	t_0	DT1
NB2/SC2	0	-8	8
NB3/SC3	-18	-25	7

* Single injection
** Multiple injection
*** Throw limit at 0.5 m/s

Operating values are the values of the built-in motor at +20 °C, with an unobstructed air flow and a dry surface

Küba *junior* DF

Technical data – DFB (E)

7 mm

Type	Rating Q_0 at 50 Hz. DT1. R404A		Cooling surface	Air flow	Air throw ***	Tube volume	Connections		Sound	Fans (Operational values at 50 Hz)				
	SC2	SC3					Inlet	Outlet	L_{WA}	Blade	Current	Per Fan		
	kW	kW	m^2	m^3/h	m	dm^3	Ø mm	Ø mm	db (A)	Ø mm	230 ± 10% V-1 50 Hz	rpm	W	A
DFB 011 E	0.40	0.32	1.4	280	5	0.3	10 x1.0*	10 x1.0*	62	200	230 V -1	1,310	9	0.07
DFB 021 E	0.48	0.38	1.8	320	5	0.4	10 x1.0*	10 x1.0*	62	200	230 V -1	1,310	9	0.07
DFB 031 E	0.61	0.49	2.7	290	5	0.6	10 x1.0*	10 x1.0*	62	200	230 V -1	1,310	9	0.07
DFB 022 E	0.96	0.77	3.6	640	6	0.8	10 x1.0*	10 x1.0*	65	200	230 V -1	1,310	9	0.07
DFB 032 E	1.22	0.97	5.4	580	6	1.2	10 x1.0*	10 x1.0*	65	200	230 V -1	1,310	9	0.07
DFB 023 E	1.44	1.15	5.4	960	9	1.2	10 x1.0*	10 x1.0*	67	200	230 V -1	1,310	9	0.07
DFB 033 E	1.83	1.46	8.1	870	9	1.8	10 x1.0*	10 x1.0*	67	200	230 V -1	1,310	9	0.07

Subject to modification.

Standard condition	t_{L1}	t_0	DT1
NB2/SC2	0	-8	8
NB3/SC3	-18	-25	7

* Single injection
** Multiple injection
*** Throw limit at 0.5 m/s

Operating values are the values of the built-in motor at +20 °C, with an unobstructed air flow and a dry surface

Küba *junior* DF

Dimensions, weights, electric defrost, drain

	Type	Dimensions							Electrical defrost 230 V-1 / 400 V-3-Y	Weights (net)		Weights (gross)		Drain
		H	B	T	L	E_1	E_2	F	Coil	DFA/B	DFA/B E	DFA/B	DFA/B E	D
		mm	mm	mm	mm	mm	mm	mm	kW	kg	kg	kg	kg	inch
1	**DF 011 E**	143	428	515	380	400	-	14	0.4	8	9	9	10	G ¾
	DF 021 E	143	528	515	380	500	-	14	0.4	9	10	10	11	G ¾
	DF 031 E	143	528	515	380	500	-	14	0.4	9	10	10	11	G ¾
2	**DF 022 E**	143	928	515	380	900	-	14	0.7	14	15	16	17	G ¾
	DF 032 E	143	928	515	380	900	-	14	0.7	16	17	18	19	G ¾
3	**DF 023 E**	143	1,328	515	380	1,300	-	14	1.0	21	22	23	24	G ¾
	DF 033 E	143	1,328	515	380	1,300	-	14	1.0	23	24	25	26	G ¾

Subject to modification.

The dimensions are only valid for the standard model design!
Note the differences in dimension among versions and accessories.

Dimensional drawings for Küba *junior* DF (1-3 motors)

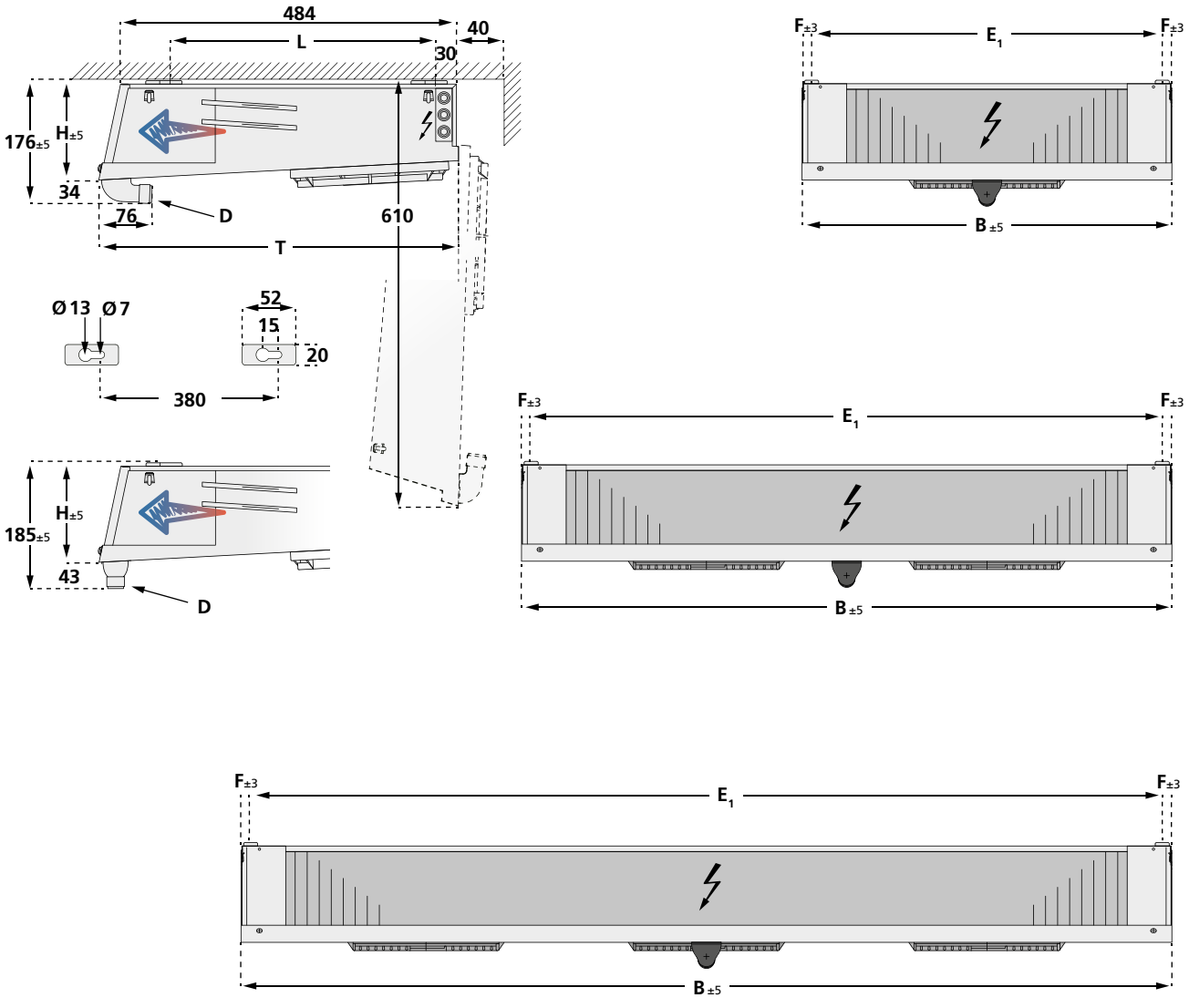

Küba *junior* DF

Variants

CO_2-Variants

V 7.60 CO_2-Direct expansion

up to 60 bar operating pressure

	Type	Rating Q_0 at NB2, R 744 (CO_2) up to 60 bar	Cooling surface	Air flow	Air throw *	Tube volume	Connections (up to 60 bar) Inlet	Connections (up to 60 bar) Outlet	Sound L_{WA}	Fans (Operational values at 50 Hz) Per Fan		
		kW	m^2	m^3/h	m	dm^3	Ø mm	Ø mm	db (A)	rpm	W	A
1	**DFBE 031 E**	0.57	2.8	290	5	0.6	10x1.0	10x1.0	62	1,310	29	0.21
2	**DFBE 032 E**	1.14	5.6	580	6	1.1	10x1.0	10x1.0	65	1,310	29	0.21
3	**DFBE 033 E**	1.88	8.3	870	9	1.6	10x1.0	10x1.0	67	1,310	29	0.21

Subject to modification.

Standard condition	t_{L1}	t_0	DT1
NB 2 / SC 2	0	-8	8

* Throw limit at 0.5 m/s

www.brand-change.com

GEA Küba GmbH

Kühler Weg 1 · 82065 Baierbrunn · Deutschland
Tel.: ++49(0)89/744 73-0 · Fax: ++49(0)89/744 73-107
kueba@gea.com · www.kueba.de

© Copyright 2015 GEA Küba GmbH · 0094.392BR.DFJE.EN · Status as of 08/2015
Subject to technical changes