CHANGING
GEA HEAT EXCHANGERS

Mounting guide

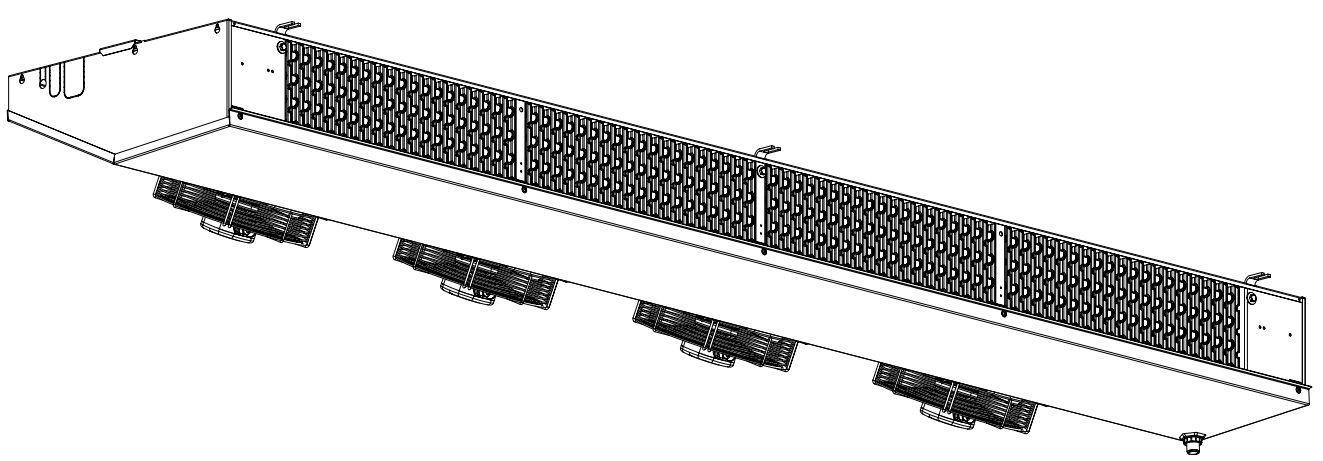

Küba DE *professional*

Mounting guide
Page 2-4

- Dimensions
- Weights
- Assembly

Electrical wiring
Page 5-11

- Motor wiring diagram
- Electrical defrosting wiring diagram
- Cabling

DE professional

Dimensions

Weights

Type	H±5	W±5	D±5	L±5	F±3
DE	mm	mm	mm	mm	mm
071 D	260	1080	660	672	175
081 D	260	1080	660	672	175
091 D	260	1080	660	672	175
–	–	–	–	–	–
–	–	–	–	–	–
072 D	260	1780	660	672	175
082 D	260	1780	660	672	175
092 D	260	1780	660	672	175
–	–	–	–	–	–
–	–	–	–	–	–
083 D	260	2480	660	672	175
093 D	260	2480	660	672	175
–	–	–	–	–	–
–	–	–	–	–	–
–	–	–	–	–	–
084 D	260	3180	660	672	175
094 D	260	3180	660	672	175
–	–	–	–	–	–
–	–	–	–	–	–
–	–	–	–	–	–

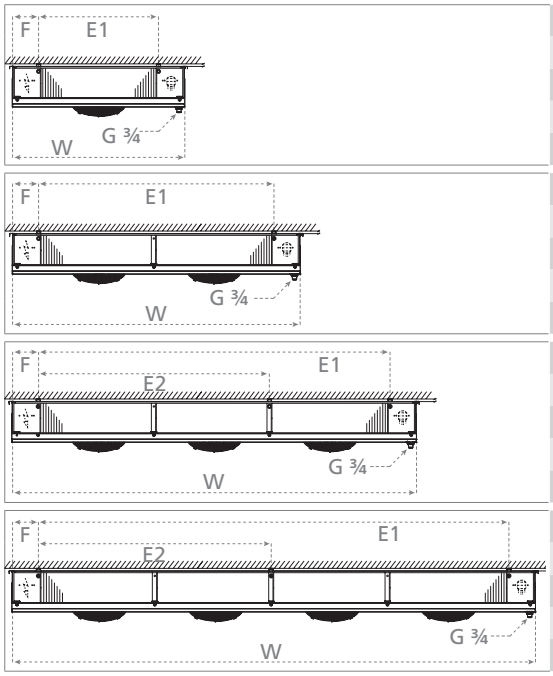

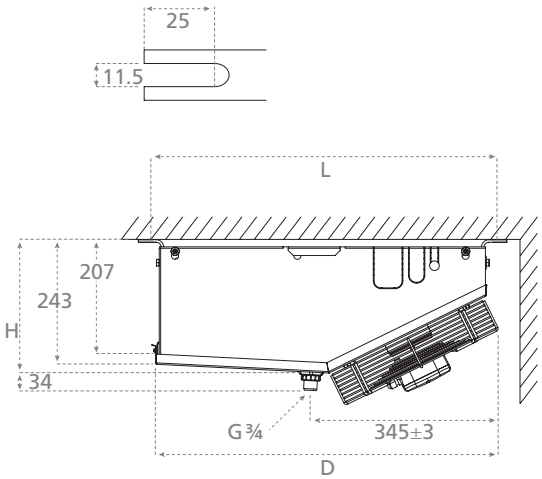

Type	E1±5	E2 ±5	B_{min}	W_{min}	Weight
DE	mm	mm	mm	mm	kg net
071 D	730	–	700	80	26
081 D	730	–	700	80	27
091 D	730	–	700	80	31
–	–	–	–	–	–
–	–	–	–	–	–
072 D	1430	–	1200	80	45
082 D	1430	–	1200	80	47
092 D	1430	–	1200	80	54
–	–	–	–	–	–
–	–	–	–	–	–
083 D	2130	1400	1800	80	67
093 D	2130	1400	1800	80	73
–	–	–	–	–	–
–	–	–	–	–	–
–	–	–	–	–	–
084 D	2830	1400	2200	80	79
094 D	2830	1400	2200	80	87
–	–	–	–	–	–
–	–	–	–	–	–
–	–	–	–	–	–

Assembly

1

1.1

1.2

1.3

1.4

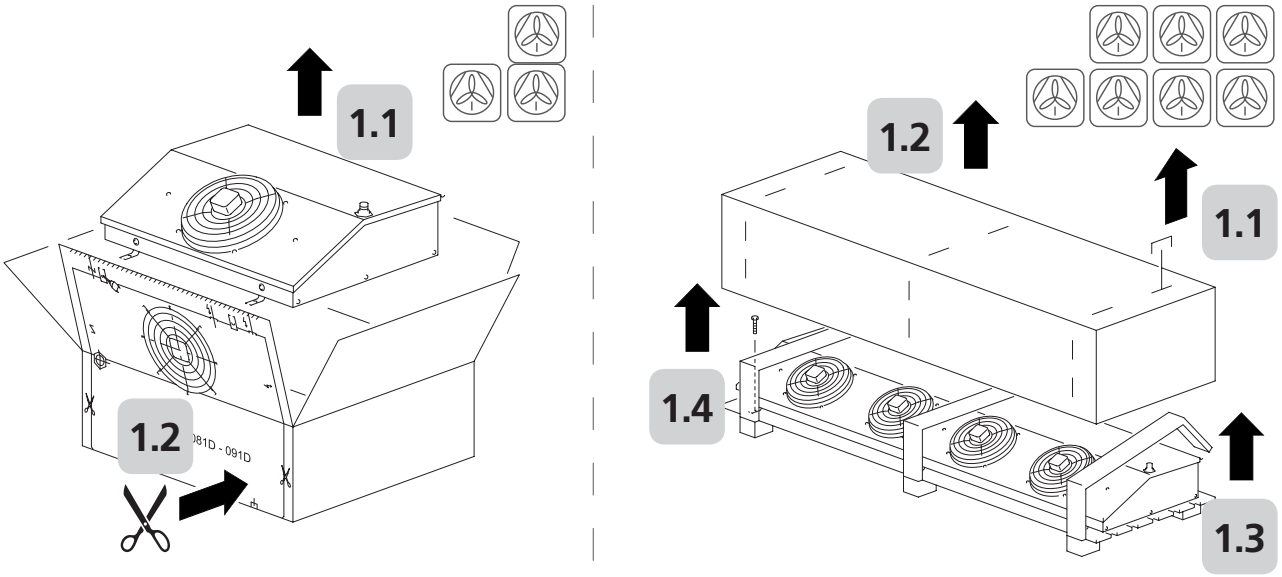

2

2.1

2.2

2.3

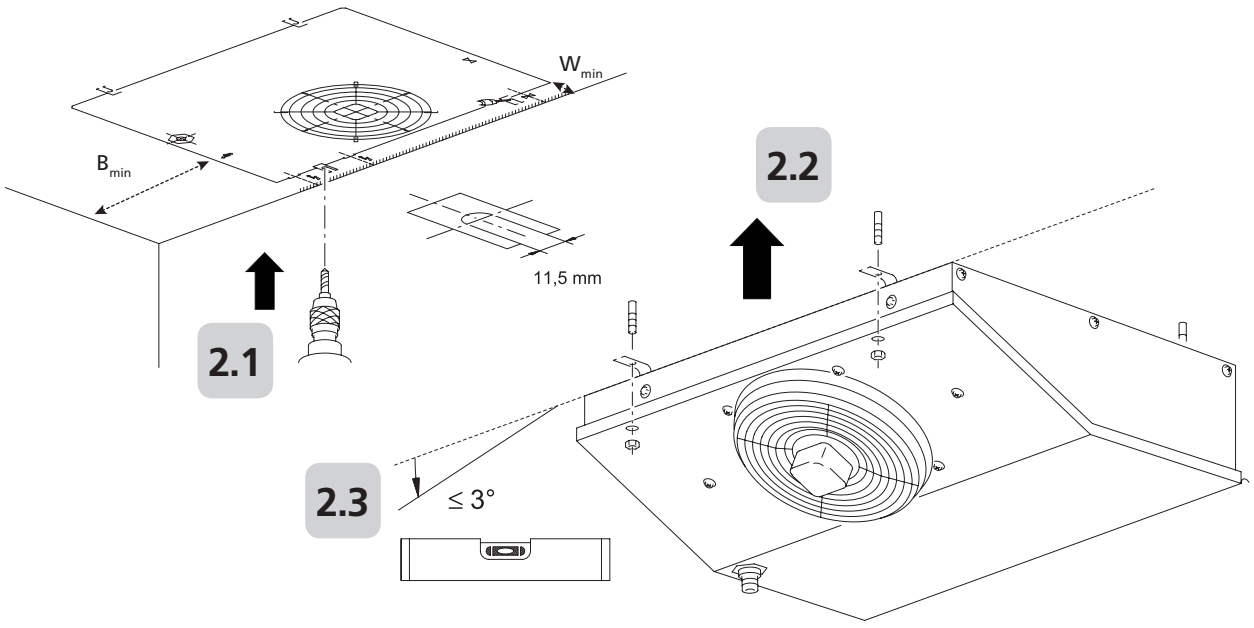

3

3.1

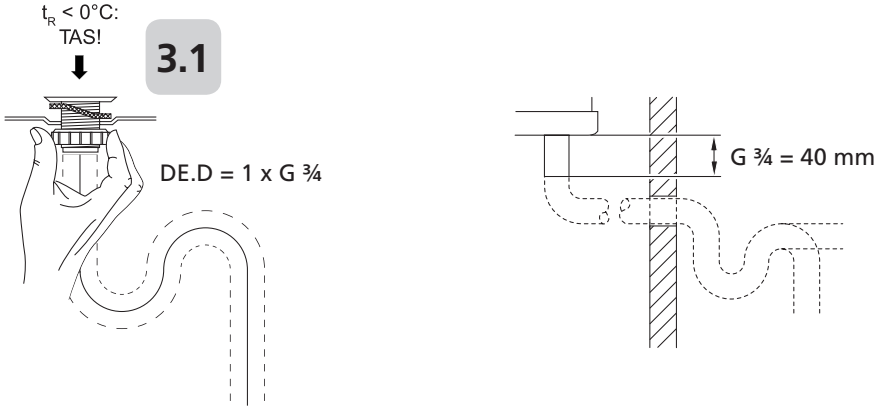

Assembly

4
4.1
4.2
4.3
4.4
4.5
4.6
4.7
4.8
4.9
4.10
4.11
4.12

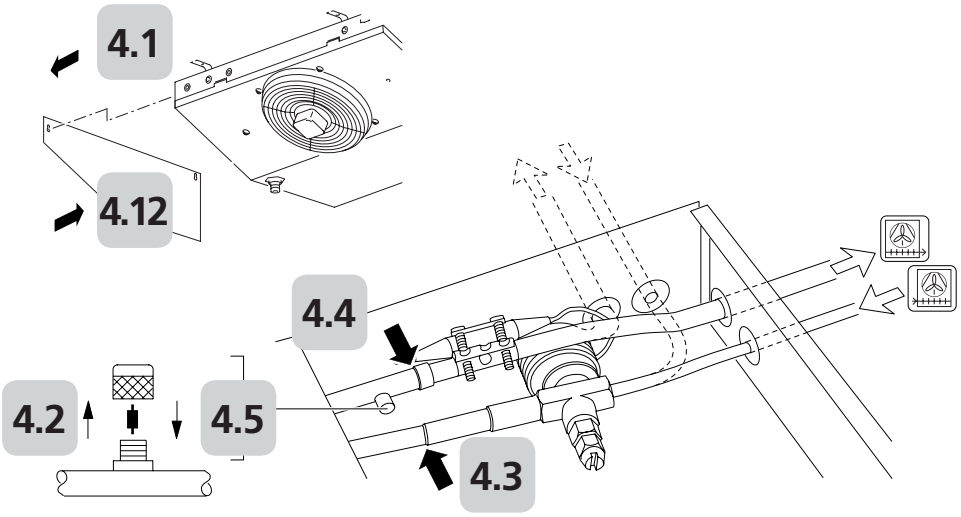

DE	DEA	DEB
	ø mm	ø mm
071 D	12	15
081 D	12	15
091 D	12	15
072 D	12	15
082 D	12	22
092 D	12	22
083 D	10	22
084 D	10	28
093 D	10	28
094 D	10	28

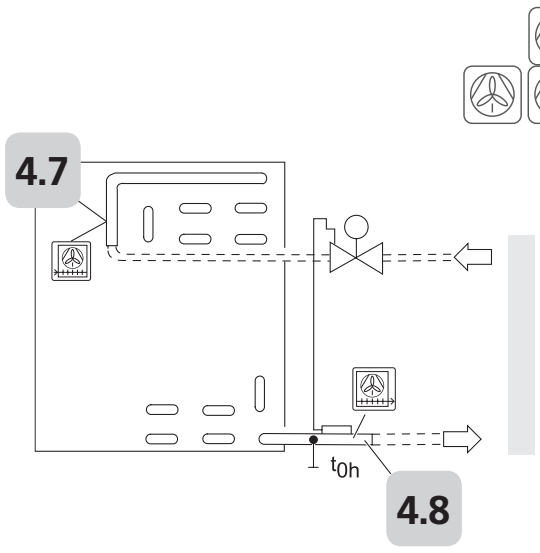

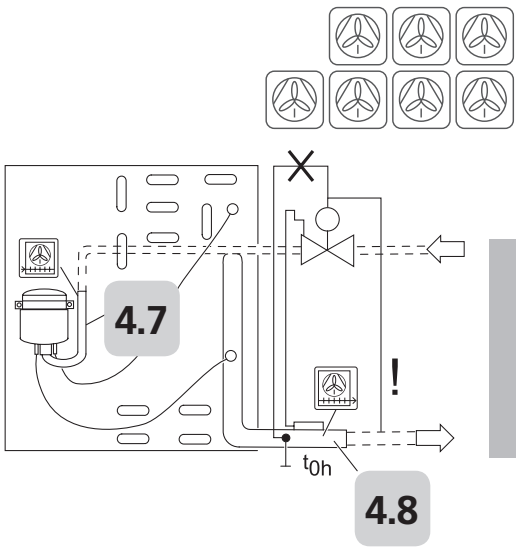

4.6

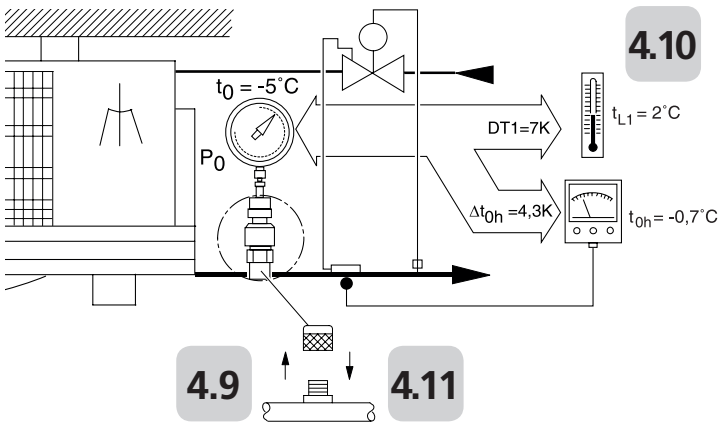

$\Delta t_{0h} \cong 0.5 \ldots 0.7 \times DT1$

DT1 10K ≅ Δt_{0h} 6.1 K
DT1 9K ≅ Δt_{0h} 5.5 K
DT1 8K ≅ Δt_{0h} 4.9 K
DT1 7K ≅ Δt_{0h} 4.3 K
DT1 6K ≅ Δt_{0h} 3.7 K
DT1 5K ≅ Δt_{0h} 3.1 K
DT1 4K ≅ Δt_{0h} 2.5 K

Electrical wiring

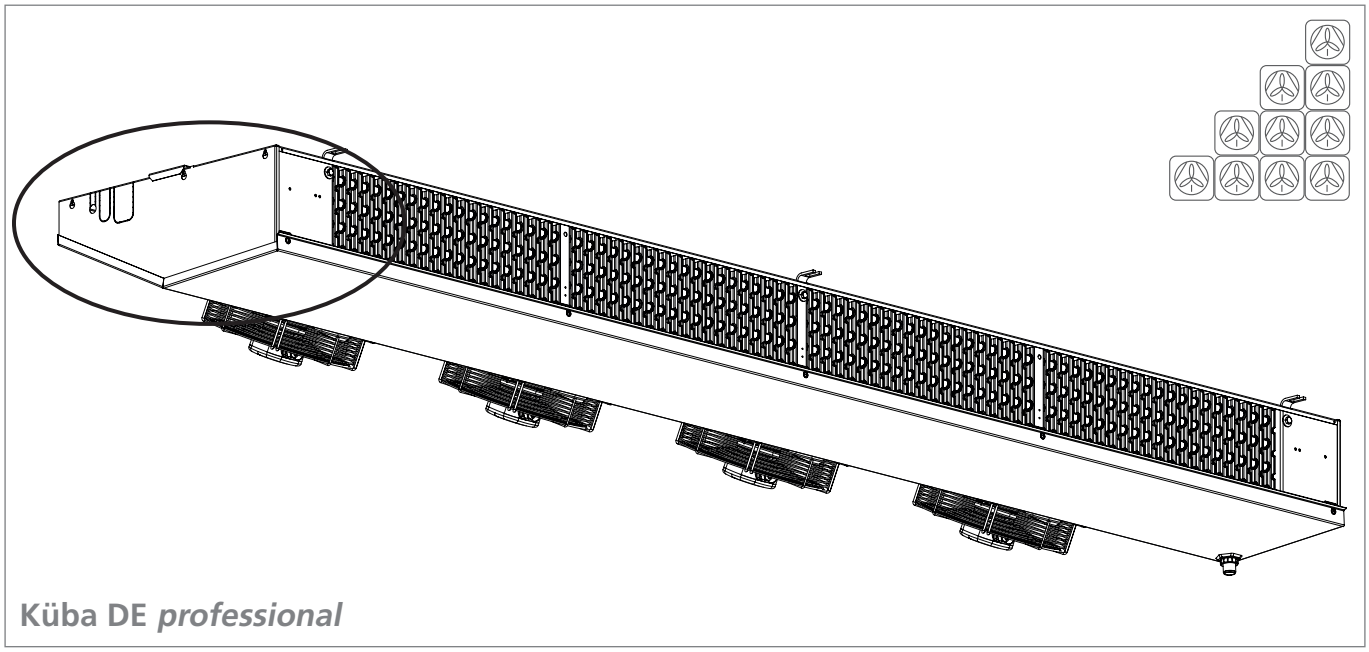

Küba DE *professional*

Motor

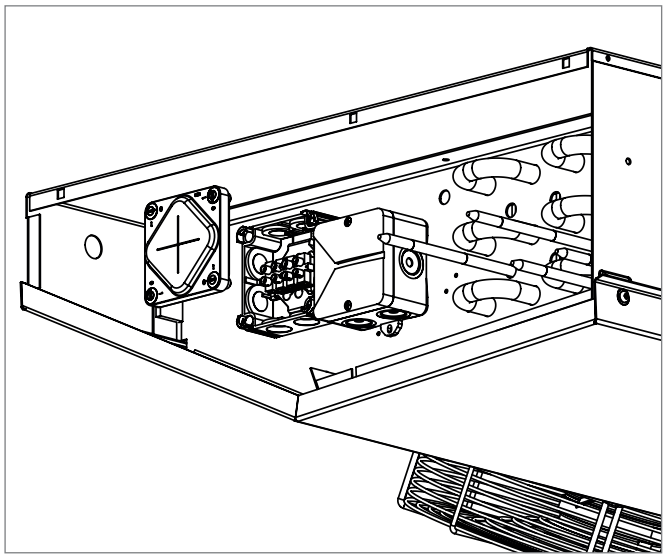

Electrical defrost

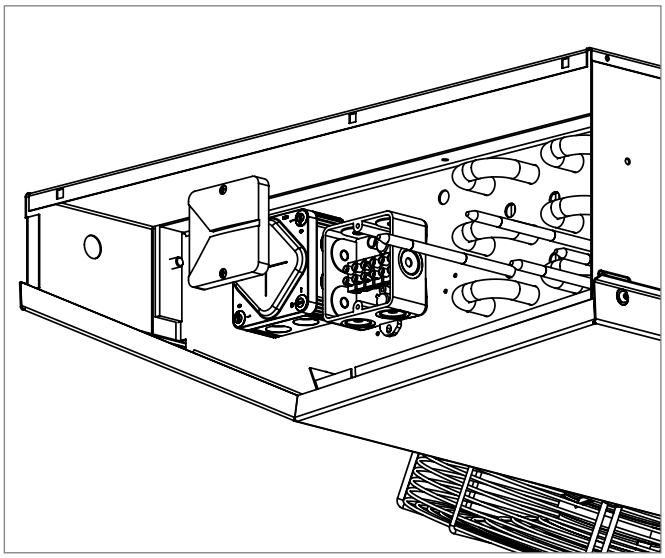

DE *professional*

Motor wiring diagram

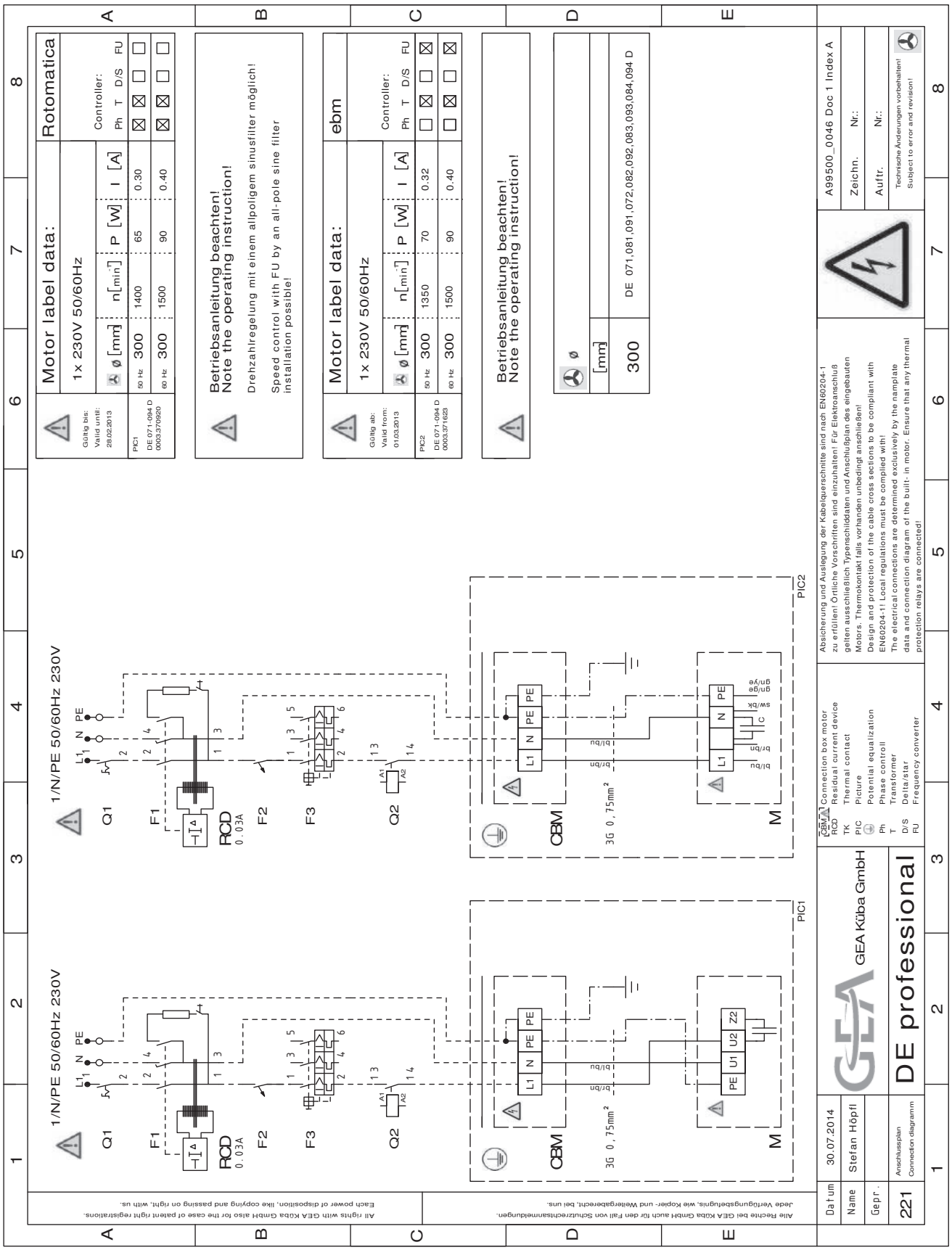

Electrical defrost wiring diagram

PIC 1

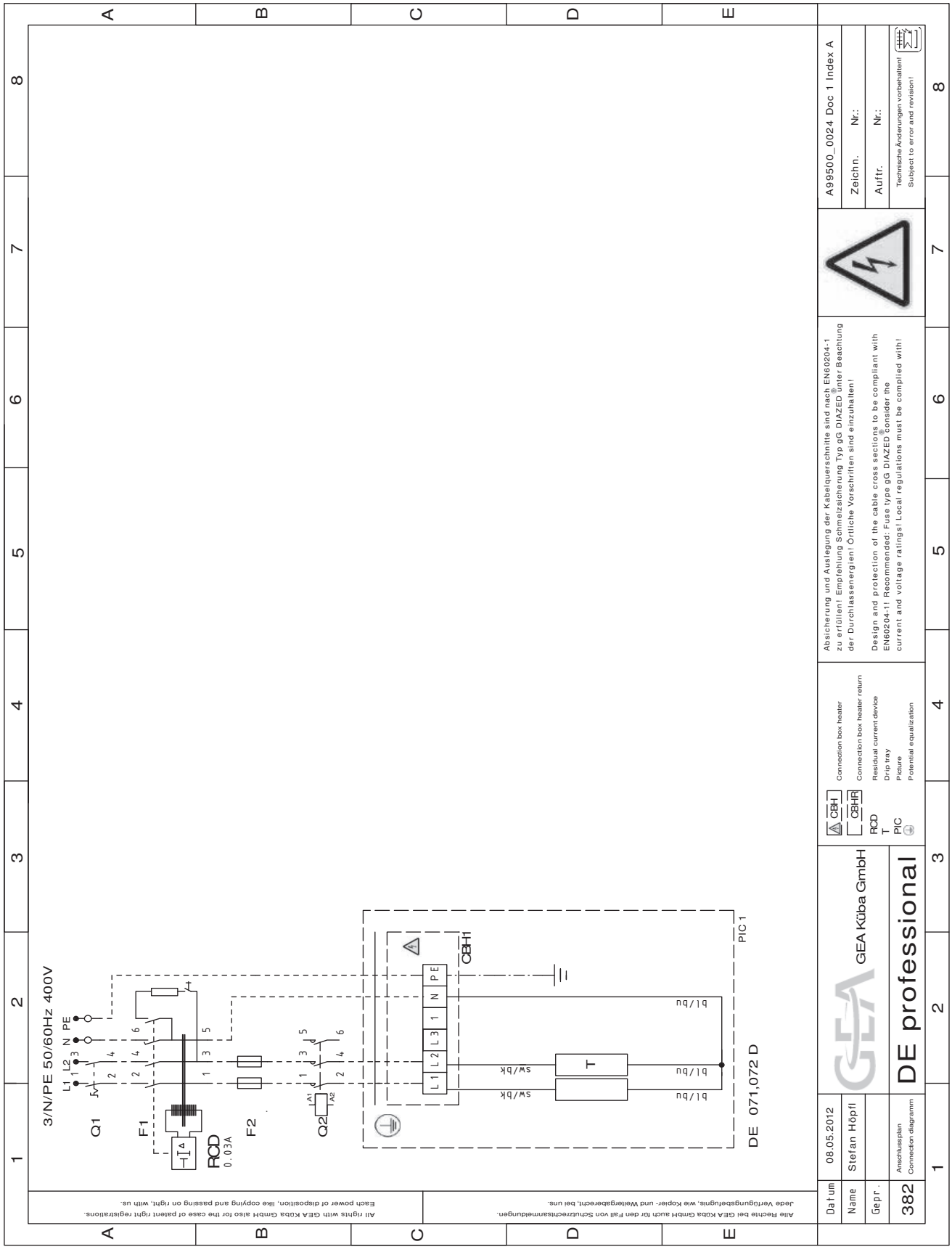

Electrical defrost wiring diagram

PIC 2

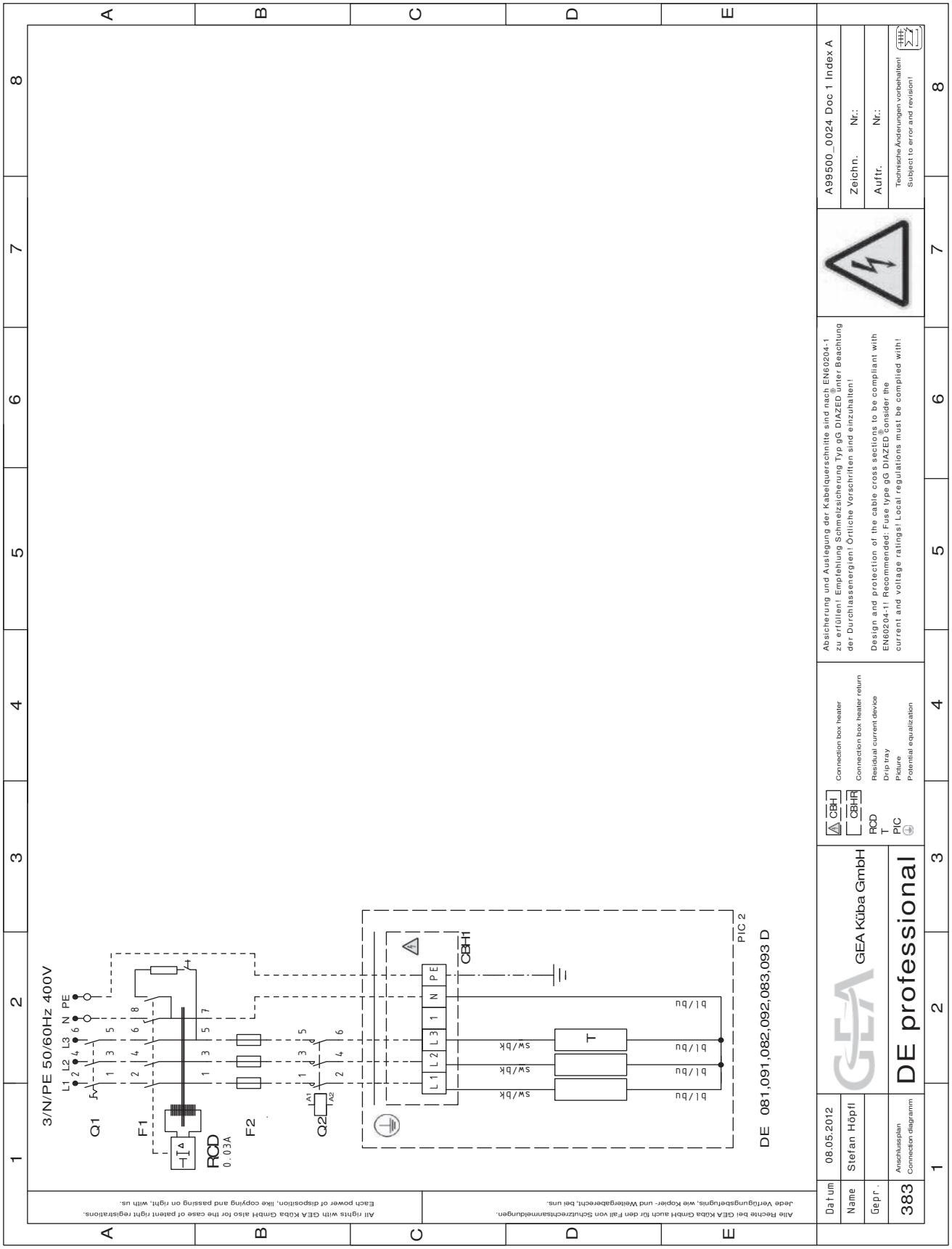

Electrical defrost wiring diagram

PIC 3

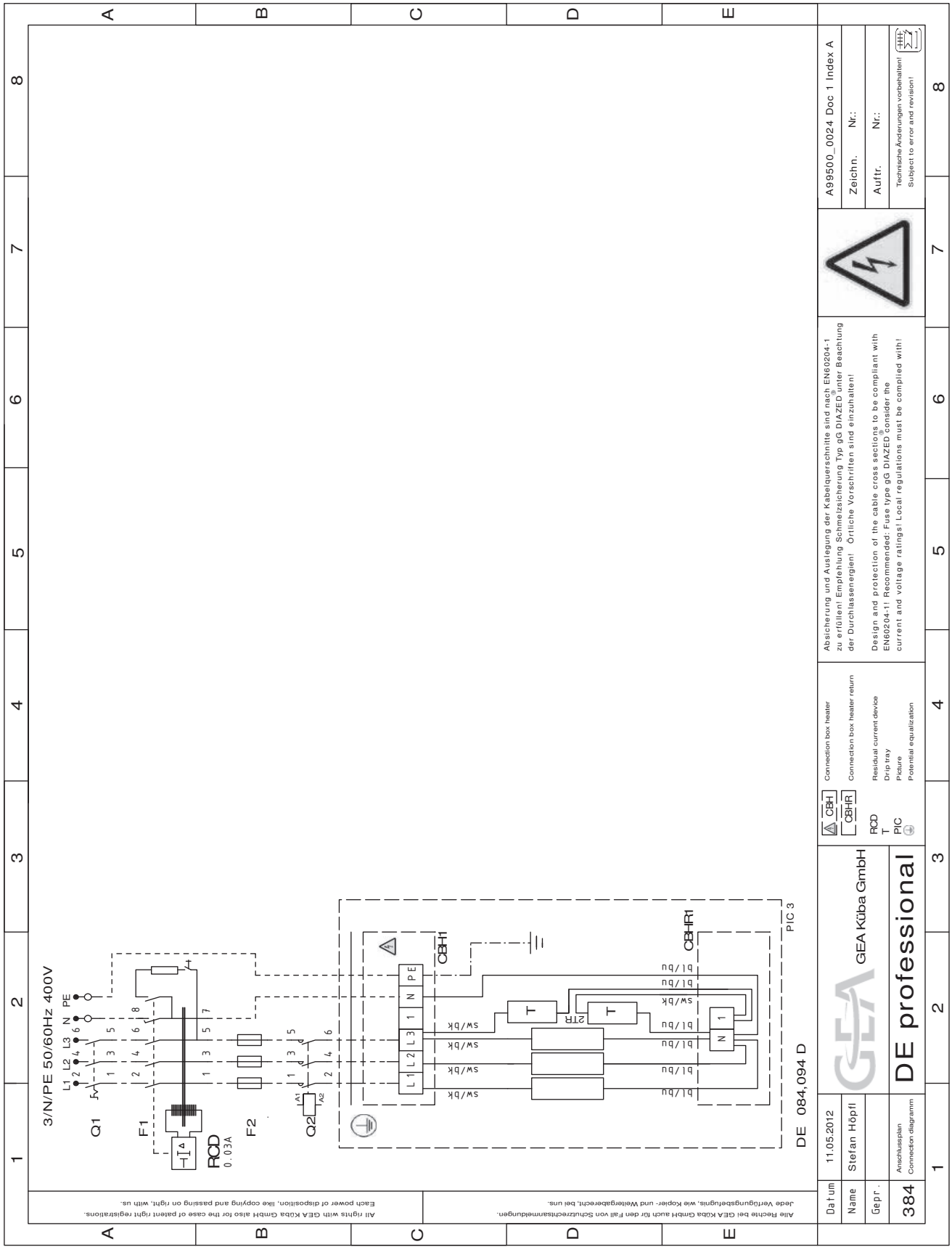

Cabling

DE.D *professional*

Standard/Series

Wiring diagram number: A99500_0024 (Doc 2; Index A)

Type		Coil heating bar (KÖ)				Drip tray heating bar (D)								**L1**		
DEAE.D DEBE.D	Finned length	Number	Length	Capacity P	Form	Number	Length	Capacity P	Form	Total power of all heating circuits	Total number of all heating circuits	Heating circuit no.	**PIC on the wiring diagram**	No. of heating elements, coil KÖ	No. of heating elements, drip tray D	No. of heating elements, drip tray D (R)
Type	L [mm]	KÖ [pcs]	L [mm]	P [W]		TW [pcs]	L [mm]	P [W]		P [kW]	[pcs]	[Nb]		[pcs]	[pcs]	[pcs]
DEAE.D DEBE.D	Finned length	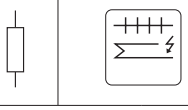												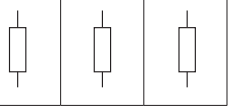		
071 D	700	1	1900	690	U100	1	2100	765	Q200	1.5	1	CBH1	1	1		
081 D	700	2	1900	690	U100	1	2100	765	Q200	2.1	1	CBH1	2	1		
091 D	700	2	1900	690	U100	1	2100	765	Q200	2.1	1	CBH1	2	1		
072 D	1400	1	3250	1210	U100	1	3500	1300	Q200	2.5	1	CBH1	1	1		
082 D	1400	2	3250	1210	U100	1	3500	1300	Q200	3.7	1	CBH1	2	1		
092 D	1400	2	3250	1210	U100	1	3500	1300	Q200	3.7	1	CBH1	2	1		
083 D	2100	2	4600	1720	U100	1	4800	1800	Q200	5.2	1	CBH1	2	1		
093 D	2100	2	4600	1720	U100	1	4800	1800	Q200	5.2	1	CBH1	2	1		
084 D	2800	4	3100	1145	L95	2	3100	1145	L95	5.2	1	CBH1	3	1		
094 D	2800	4	3100	1145	L95	2	3100	1145	L95	5.2	1	CBH1	3	1		

	CBH connection box Heater Heating circuit												CBHR connection box Heater return Heating circuit return			
L2			L3													
No. of heating elements, coil KÖ	No. of heating elements, drip tray D	No. of heating elements, drip tray D (R)	No. of heating elements, coil KÖ	No. of heating elements, drip tray D	No. of heating elements, drip tray D (R)	Total power of heating circuit P	Current L1	Current L2	Current L3	Recom-mended cable cross-section for supply line (building-side)	SKS	Junction box conn. box with earthing cable	Heating circuit no.	Junction box connection box	Minimum cable cross-section for return	Cable length for parts list
[pcs]	[pcs]	[pcs]	[pcs]	[pcs]	[pcs]	P [kW]	I [A]	I [A]	I [A]	min [mm²]	[Size]	CBH	[Nb]	CBHR	min [mm²]	[m]
												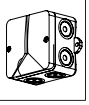		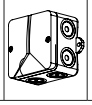		
	D 1					1.5	3.0	3.3	0.0	2.50	4	ABO025				
1				D 1		2.1	3.0	3.0	3.3	2.50	4	ABO025				
1				1 D		2.1	3.0	3.0	3.3	2.50	4	ABO025				
	1 D					2.5	5.3	5.7	0.0	2.50	3	ABO025				
1				1 D		3.7	5.3	5.3	5.7	2.50	3	ABO025				
1				1 D		3.7	5.3	5.3	5.7	2.50	3	ABO025				
1				1 D		5.2	7.5	7.5	7.8	2.50	3	ABO025				
1				1 D		5.2	7.5	7.5	7.8	2.50	3	ABO025				
2			1		2 D(R)	5.2	5.0	10.0	7.5	2.50	4	ABO025	CBHR1	ABO025	2.5	3.95
2			1		2 D(R)	5.2	5.0	10.0	7.5	2.50	4	ABO025	CBHR1	ABO025	2.5	3.95

Heat Exchangers

Küba GmbH

Kühler Weg 1 · 82065 Baierbrunn · Germany
Tel.: +49 89/744 73-0 · Fax: +49 89/744 73-107
kueba@gea.com · www.kueba.com

© Copyright 2014 Küba GmbH · 0001.392250.1 · Status 08/2014
Technical modifications reserved