CHANGING
GEA HEAT EXCHANGERS

Mounting Guide

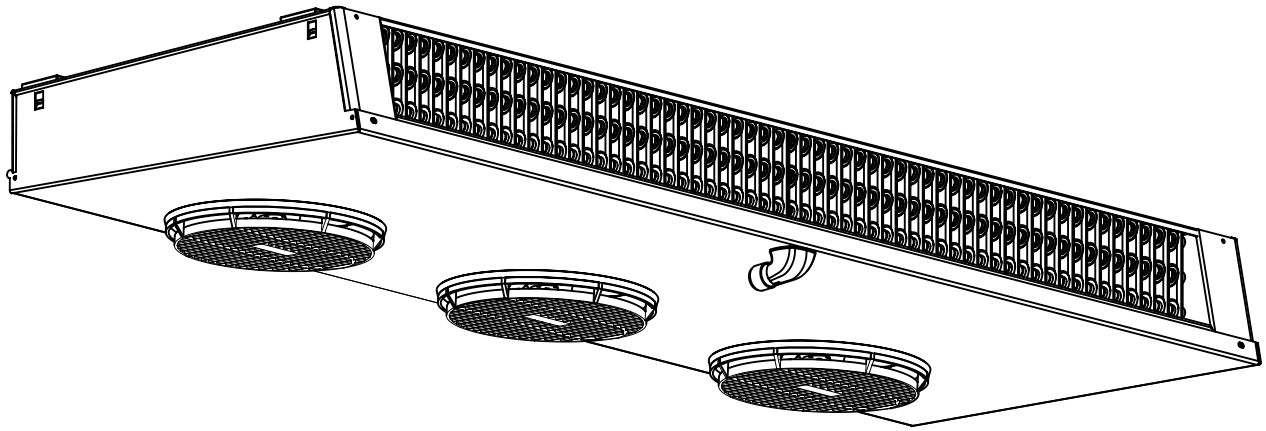

Küba *junior* DF

Mounting Guide
Page 2-4

- Dimensions
- Weights
- Assembly

Electrical wiring
Page 5-11

- Motor wiring diagram
- Electrical defrosting wiring diagram
- Cabling

junior DF

Dimensions

Weights

Type	H±5	W±5	D±5	L±5	F±3
DF	mm	mm	mm	mm	mm
011 E	143	428	515	380	14
021 E	143	528	515	380	14
031 E	143	528	515	380	14
–	–	–	–	–	–
–	–	–	–	–	–
022 E	143	928	515	380	14
032 E	143	928	515	380	14
–	–	–	–	–	–
–	–	–	–	–	–
–	–	–	–	–	–
023 E	143	1328	515	380	14
033 E	143	1328	515	380	14
–	–	–	–	–	–
–	–	–	–	–	–
–	–	–	–	–	–

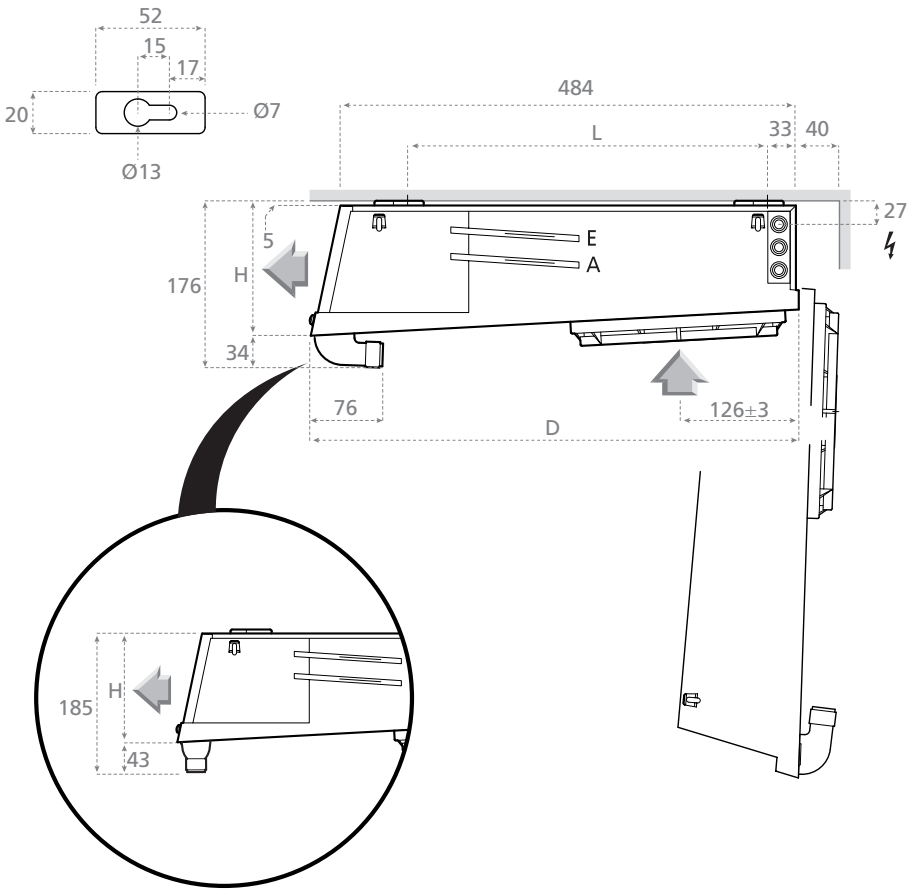

Type	E1±5	Weight	
DF	mm	kg	
		net	gross
011 E	400	8	9
021 E	500	9	10
031 E	500	9	10
–	–	–	–
–	–	–	–
022 E	900	14	16
032 E	900	16	18
–	–	–	–
–	–	–	–
–	–	–	–
023 E	1300	21	23
033 E	1300	23	25
–	–	–	–
–	–	–	–
–	–	–	–

Assembly

1

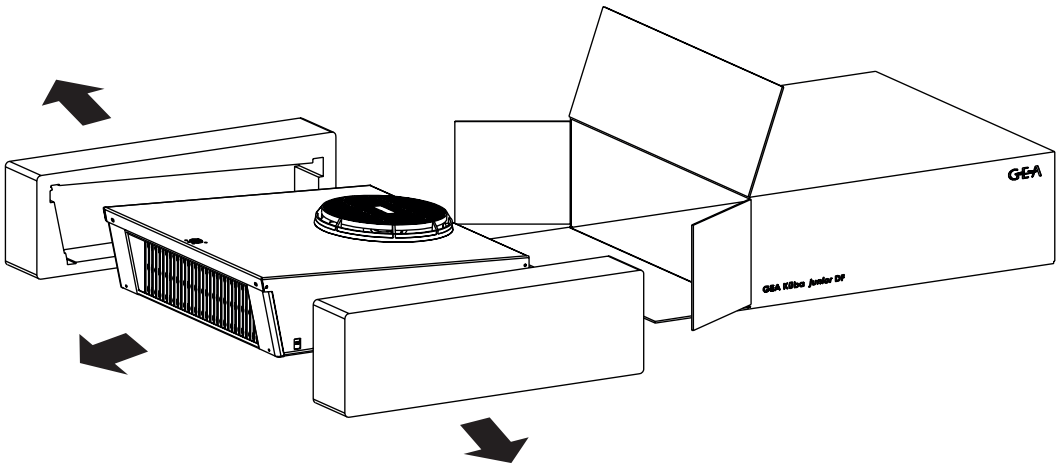

2

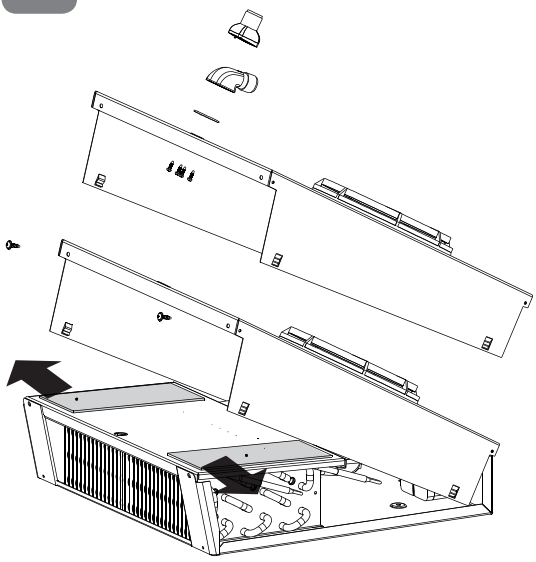

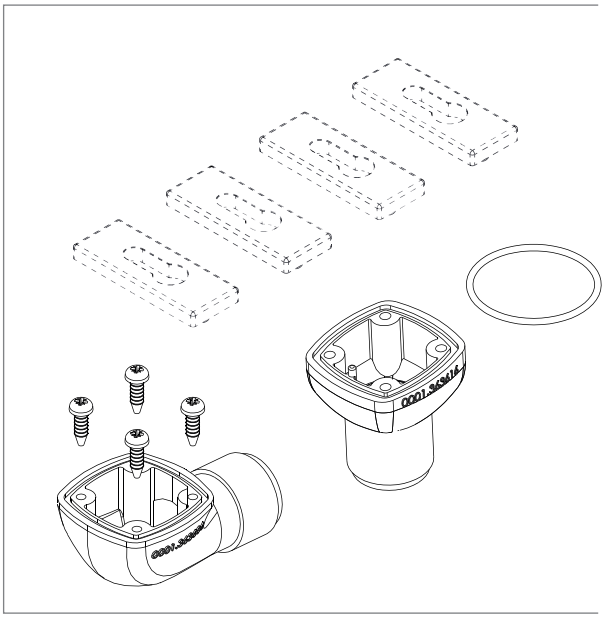

3

3.1

3.2

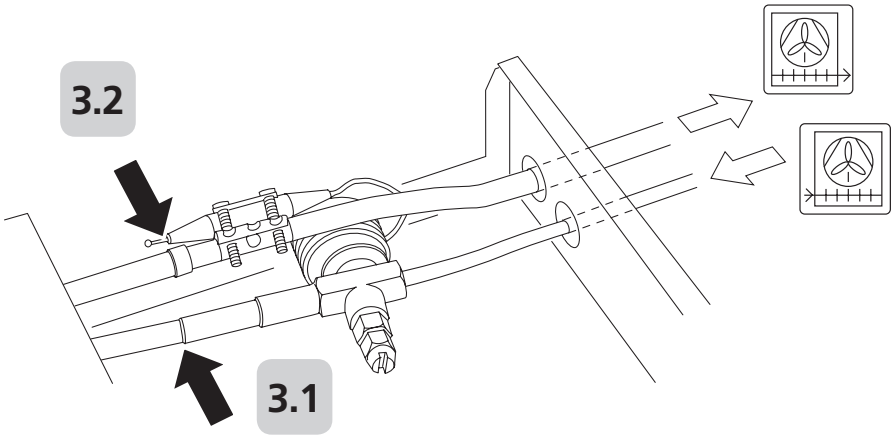

DF	ø mm	ø mm
011 E	10	10
021 E	10	10
031 E	10	10
022 E	10	10
032 E	10	10
023 E	10	10
033 E	10	10

Assembly

4

4.1

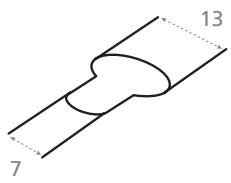

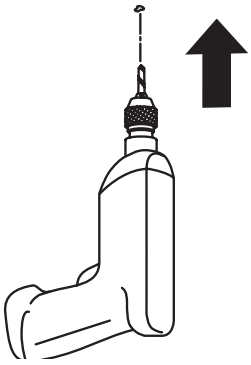



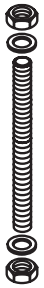

5

5.1 → **5.2** → **5.3** → **5.4** → **5.5**

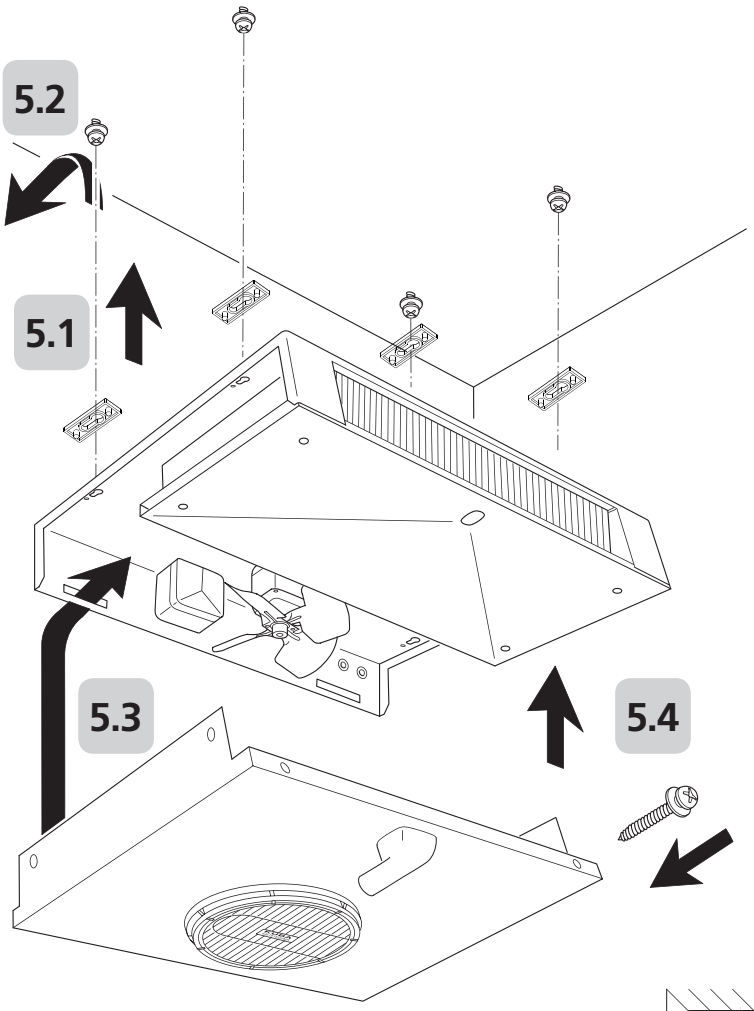

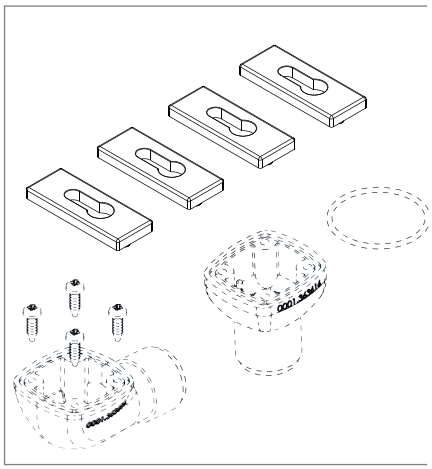

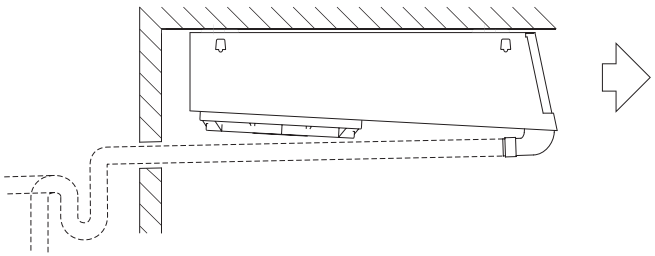

Electrical wiring

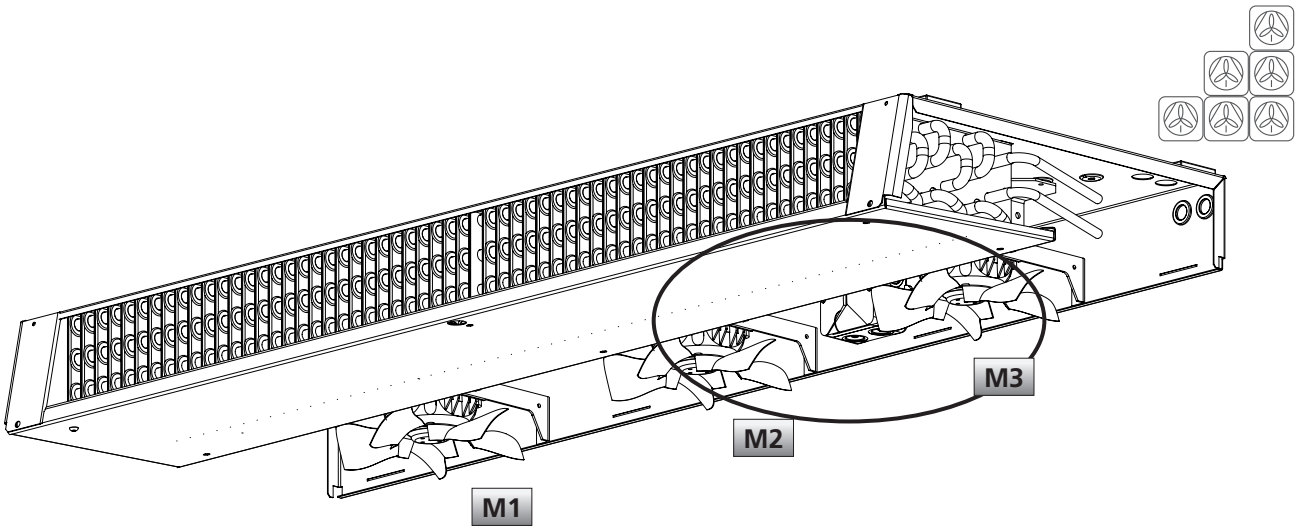

Küba *junior* DF

Motor

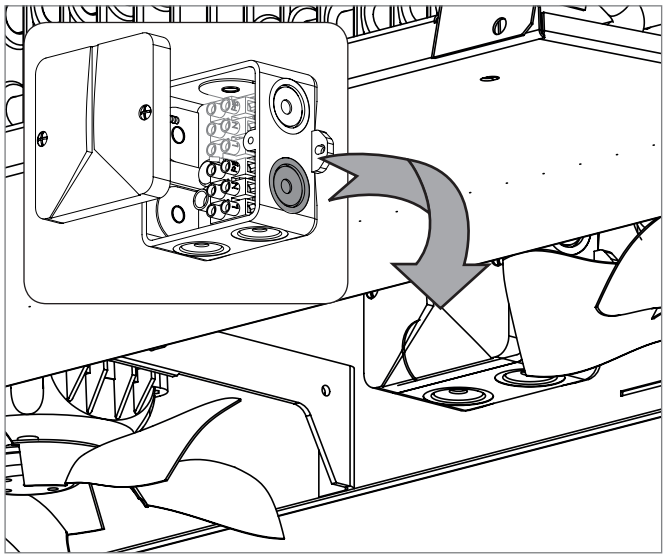

Electrical defrost

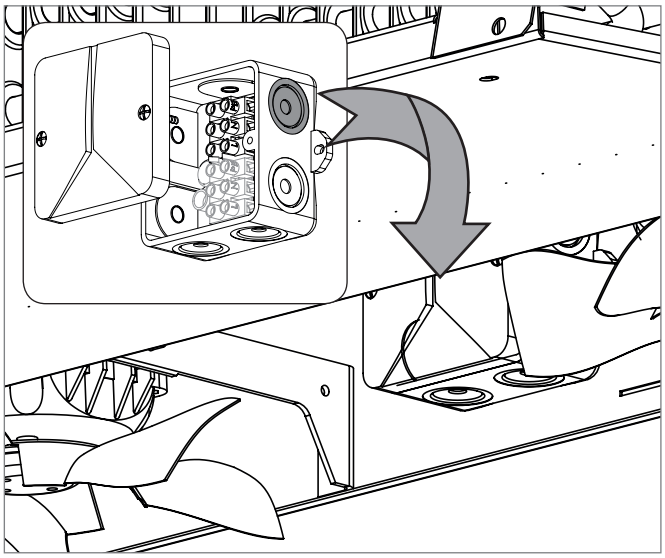

junior DF

Motor wiring diagram

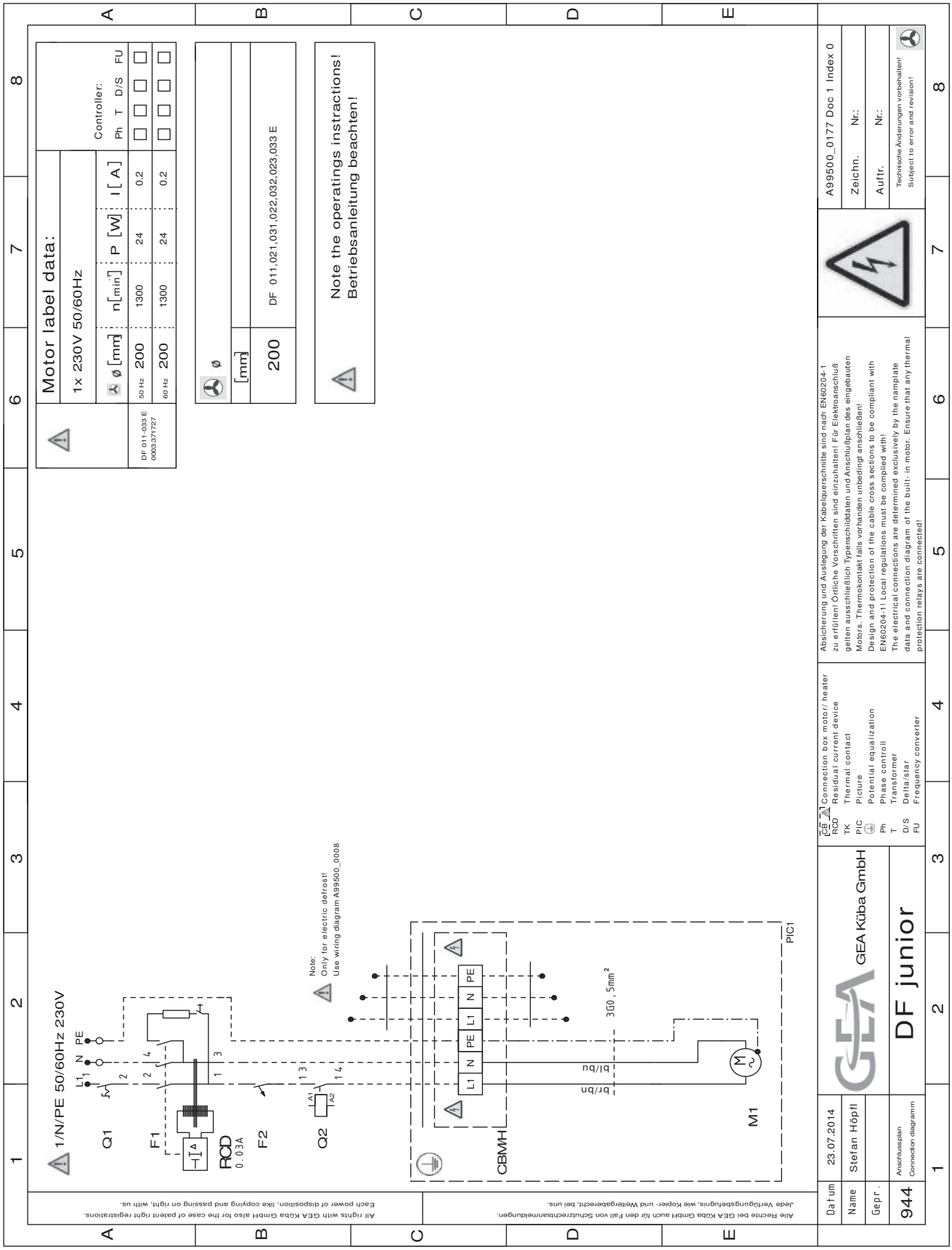

Electrical defrost wiring diagram

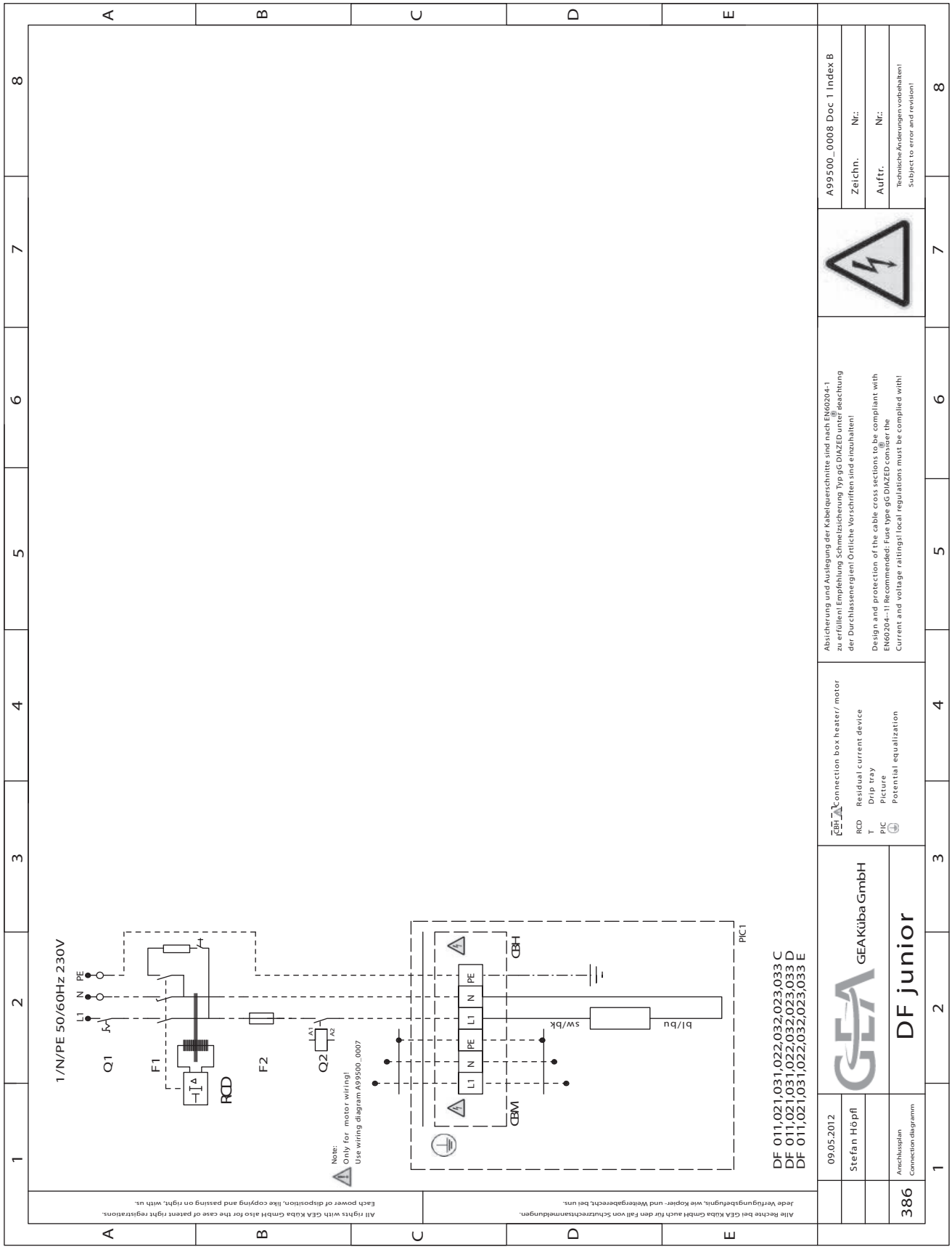

Cabling

DF.E *junior*

Standard/Series **Wiring diagram number: A99500_0008** (Doc 2; Index A)																	
Type		Coil heating bar (KÖ)				Drip tray heating bar (D)							**PIC**	**L1**			
DFA/B.C DFA/B.D DFA/B.E	Finned length	Number	Length	Capacity P	Form	Number	Length	Capacity P	Form	Total capacity of all heating circuits	Total number of all heating circuits	Heating circuit no.	**on the wiring diagram**	No. of heating element, coil KÖ	No. of heating element, drip tray D	No. of heating element, drip tray D (R)	
	L [mm]	KÖ [pcs]	L [mm]	P [W]		TW [pcs]	L [mm]	P [W]		P [kW]	[pcs]	[Nb]		[pcs]	[pcs]	[pcs]	
	Finned length																
011	300	1	1000	345	U66/112					0.35	1		1	1			
021	400	1	1200	420	U66/112					0.42	1		1	1			
031	400	1	1200	420	U132/79					0.42	1		1	1			
022	800	1	2000	725	U66/112					0.73	1		1	1			
032	800	1	2000	725	U132/79					0.73	1		1	1			
023	1200	1	2800	1035	U66/112					1.04	1		1	1			
033	1200	1	2800	1035	U132/79					1.04	1		1	1			

	CBH connection box Heater Heating circuit													CBHR connection box Heater return Heating circuit return			
L2			L3														
No. of heating element, coil KÖ	No. of heating element, drip tray D	No. of heating element, drip tray D (R)	No. of heating element, coil KÖ	No. of heating element, drip tray D	No. of heating element, drip tray D (R)	Total capacity of heating circuit P	Current L1	Current L2	Current L3	Recom-mended cable cross-section for supply line (building-side)	SKS	Junction box conn. box with earthing cable	Heating circuit no.	Junction box connection box	Minimum cable cross-section for return	Cable length for parts list
[pcs]	[pcs]	[pcs]	[pcs]	[pcs]	[pcs]	P [kW]	I [A]	I [A]	I [A]	min [mm²]	[Size]	CBH	[Nb]	CBHR	min [mm²]	[m]
						0.35	1.50			2.50	2	ABO025				
						0.42	1.83			2.50	2	ABO025				
						0.42	1.83			2.50	2	ABO025				
						0.73	3.15			2.50	2	ABO025				
						0.73	3.15			2.50	2	ABO025				
						1.04	4.50			2.50	4	ABO025				
						1.04	4.50			2.50	4	ABO025				

GEA Küba GmbH

Kühler Weg 1 · 82065 Baierbrunn · Germany
Tel.: +49 89/744 73-0 · Fax: +49 89/744 73-107
kueba@gea.com · www.kueba.com

© Copyright 2015 GEA Küba GmbH · 0001.392263.1 · Status 01/2015
Technical modifications reserved