

Küba SG *commercial classic*

Precision in the Cold Room – Available ex stock

Küba SG *commercial classic*

Precision in the Cold Room – Available ex stock







Basic model for complex Applications

Electric Defrost as Standard

Type designation code

1	2	3	4	5	6
SG	B	E	06	2	D

1. Model range designation
2. Fin spacing (7 mm)
3. Electric defrost
4. Size
5. Number of fans
6. Generation Code

Küba made in GERMANY

EUROVENT CERTIFIED PERFORMANCE www.eurovent-certification.com

ErP ready

Küba SG commercial classic



Capacity range (for NB2)

0.9 kW 10 kW

Temperature range (t_{L1})

-25°C 0°C +20°C

Fans

to

Content

Application benefits for contractors and operators 4

Basic version 6

Technical data – SGBE 8

Weights, electric defrost 8

Dimensions, drain 9

Dimensional drawings 9

Accessories 10

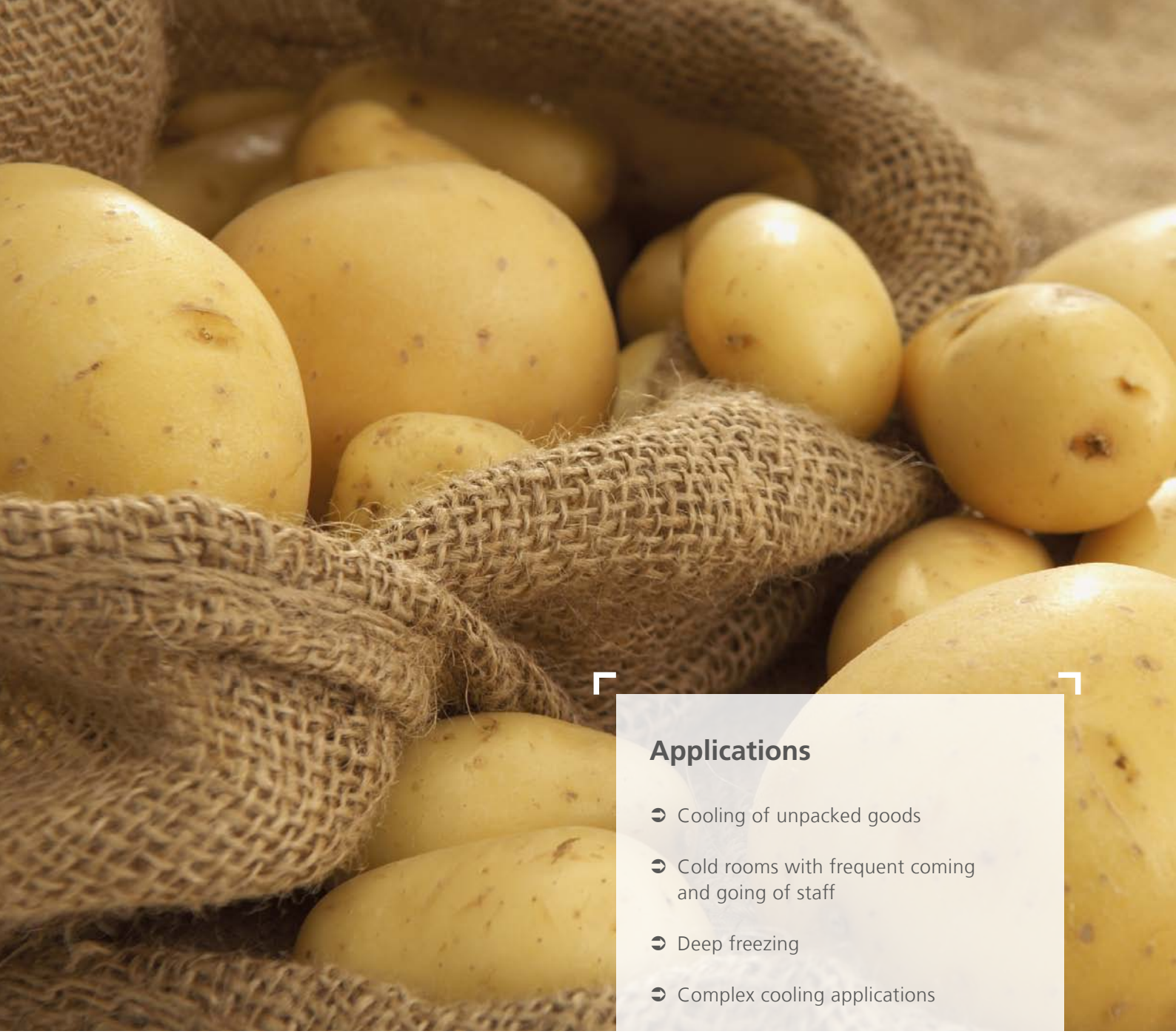

Applications

- Cooling of unpacked goods
- Cold rooms with frequent coming and going of staff
- Deep freezing
- Complex cooling applications

Küba SG *commercial classic*

Application benefits for contractors and operators

Comeback of a classic: the Küba SG *commercial classic*

Long-term storage, assurance of satisfactory maturing processes and ideal atmospheric humidity: these are the key performance factors for the Küba SG *commercial classic*. It satisfies, in other words, complex commercial refrigeration requirements in production and processing of open and pre-packed food.

The requirements placed by chilled goods are complex, and an effective cooling process involves considerably more than merely the temperature of the goods being refrigerated.

For example, the units must be equipped with very large surface areas to ensure minimum levels of dehumidification. These characteristics are essential in industrial processing of meat and bakery products; warehousing of flowers, fruit, and vegetables; and production of deep-frozen goods – basically all applications without aggressive airborne particles in the ambient air.

The Küba SG *commercial classic* is also highly effective under complex sets of conditions: for example, with frequent staff traffic in and out of the cold rooms – which means regular air exchange with the surrounding air.

Küba SG *commercial classic*

from the GEA Küba Blue Line production range

With intensive handling of goods and long storage times, the SG *commercial classic* sets standards in efficiency and safety. If the stored goods are frequently removed and re-stored, the cooling duty of the evaporator must be designed such that it assures uniform temperature distribution.

The Küba SG *commercial classic* is the optimal air cooler for applications such as these. One decisive factor is that its parallel, tubing system permits less dehumidification of the air than a conventional air cooler with staggered tubing.
The SG application range, depending on configuration, extends from medium temperature cooling to freezing as low as -25 °C room temperature.

The benefit that makes the new SG *commercial classic* a stand-alone air cooler range is primarily its standardized equipment, matched to the requirements of individual application scenarios. The finish of the casing components, with their food-safe and environmentally friendly powder coating, provides a surface structure that is effectively resistant to scratches, impacts, and corrosion. These components can also be very easily cleaned, and the mounting brackets are made of stainless steel.

The AC fans, in conformity with the relevant ErP Directive, offer speed control in conjunction with a retrofitted unit. These fans are especially effective for small and medium-sized cold stores.

The SG *commercial classic* range offers series-production models for standard as well as more complex applications. These air coolers are available on stock at an optimal benefit-cost ratio, and 10 cooler unit types can be ordered throughout a cooling duty range from 0.7 to 10 kW.

* Transformer, Phase Control, Frequency Converter with all-pole sinusoidal filter (please see manufacturer specifications)

Quick selection

Medium Temperature Cooling [NB2]

t_{L1}= 0°C | t_0= -8°C | R404a

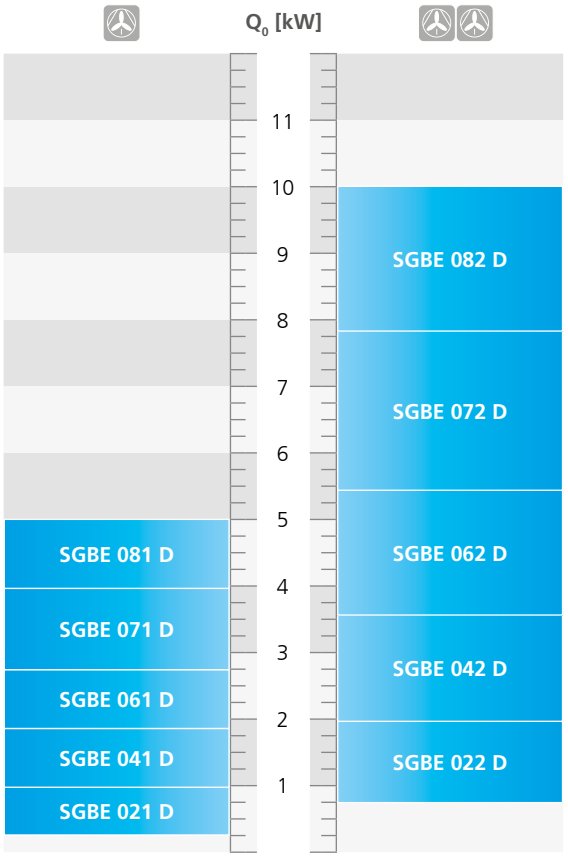

Low Temperature Cooling (Freezing) [NB3]

t_{L1}= -18°C | t_0= -25°C | R404a

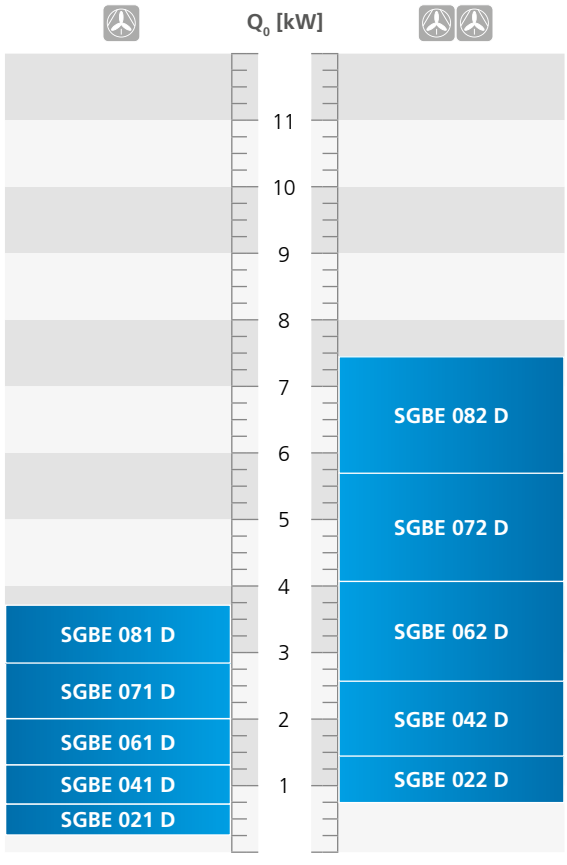

t_{L1} = Air entering into cooler | t_o = Evaporating temperature

Küba SG *commercial classic*

Basic version



Casing

- Smooth aluminum and zinc coated steel
- High-grade powder coating RAL 9018 papyrus white
- Food-safe
- Best quality powder coated edges
- Removable side panels
- Stainless steel mounting material
- Plastic drain



Heat exchanger

- Heat exchanger with aligned tube pattern; internally grooved special copper tubes (drawn oxygen-free), according to DIN EN 12735-1,2; diameter: 15 mm; with closed pure-aluminum HFE® fins
- Fin spacing: B = 7.0 mm
- Fins flared to form-fit the core tube
- Maximum heat transfer with compact dimensions
- Series SG.D *classic* Küba Venturi-refrigerant distributors *Tubing:* special copper piping with inner fins; *Fins*: Al *End plates*: Al



Electric defrost

- Heaters with CrNi steel sleeve
- Vapour-tight connections
- Mains voltage: 230 V-1/400V-3-Y
- Wired ready to connect in junction boxes
- Optimized tubular heater configurations ensure fast and even defrosting
- Fins flared to form-fit the core tube
- Aluminium heat pipes that ensure excellent heat transfer to the fins and thus effective defrosting cycles with optimized service life.



Fans

- High motor efficiency and lowest noise using fans made of high performance composite material and owlet blades
- Fan diameters available: 250, 300, 400 mm
- Permissible motor operating temperatures: -25° C bis +40° C
- 230 V-1-50 Hz
- Internally connected thermistor
- Protection class: IP44
- Insulation class: F | THCL155
- Terminal box at stator (Operating capacitor mounted within terminal box)
- Fan guard (contact guard), black powder coated
- Controller:
  - Phase control ☑
  - Transformer ☑
  - Delta/star ☐
  - Frequency converter ☑

Please observe the manufacturer's information!



Motor label data*

Type	Ø mm	50 Hz min^{-1}	W	A
SGBE 21 & 22 D	250	1.370	50	0,24
SGBE 41 & 42 D	300	1.330	100	0,42
SGBE 61 & 62 D	400	950	130	0,60
SGBE 71,72,81,82 D	400	1.340	240	1,05

Motor data per fan

*Data provided by the manufacturer

Küba SG *commercial classic*

Technical data – SGBE

7 mm

Type	Rating Q_0 at 50 Hz. DT1. R404A		Cooling surface	Air flow	Air throw ***	Tube volume	Connections		Sound	Fans (Operational values at 50 Hz)				
	SC2	SC3					Inlet	Outlet	L_{WA}	Blade	Current	Per Fan		
	kW	kW	m^2	m^3/h	m	dm^3	Ø mm	Ø mm	db (A)	Ø mm	230 ± 10% V-1 50 Hz	rpm	W	A
SGBE 021 D	0.9	0.7	6.3	780	6	1.7	12x1.0*	15x1.0	62	250	230	1,375	48	0.24
SGBE 041 D	1.8	1.3	10.9	1,660	8	2.8	12x1.0*	15x1.0	66	300	230	1,358	89	0.38
SGBE 061 D	2.7	2.0	18.8	1,990	9	4.9	12x1.0*	22x1.0	64	400	230	953	126	0.58
SGBE 071 D	3.9	2.8	22.6	3,210	15	5.8	15x1.0**	28x1.5	71	400	230	1,382	212	0.92
SGBE 081 D	5.0	3.7	33.8	3,340	16	8.4	15x1.0**	28x1.5	71	400	230	1,382	212	0.92
SGBE 022 D	1.9	1.4	12.7	1,560	11	3.1	12x1.0*	15x1.0	65	250	230	1,375	96	0.48
SGBE 042 D	3.6	2.6	21.7	3,320	14	5.3	15x1.0*	22x1.0	69	300	230	1,358	178	0.76
SGBE 062 D	5.4	4.1	37.6	3,980	15	9.2	15x1.0**	28x1.5	67	400	230	953	252	1.16
SGBE 072 D	7.8	5.7	45.1	6,420	21	11.0	15x1.0**	35x1.5	74	400	230	1,382	424	1.84
SGBE 082 D	10.0	7.4	67.6	6,680	22	16.2	15x1.0**	35x1.5	74	400	230	1,382	424	1.84

Subject to modifications

Standard condition	t_{L1}	t_0	DT1
NB2/SC2	0	-8	8
NB3/SC3	-18	-25	7

Correction factors for other refrigerants

Refrigerant	NB2/SC2	NB3/SC3
R134a	1,00	0,91
R507	0,97	0,97
R22	0,95	0,95

* Single injection
** Multiple injection through Venturi distributor
*** Throw limit at 0.5 m/s

Küba SG *commercial classic*

Weights, Electric defrost

Type	Electrical defrost 230 V-1 / 400 V-3-Y			Weights (net)	Weights (gross)
	Coil	Tray	Total	SGBE	SGBE
	kW	kW	kW	kg	kg
SGBE 021 D	0.8	0.4	1.2	14	16
SGBE 041 D	1.0	0.4	1.4	21	23
SGBE 061 D	1.6	0.2	1.9	34	39
SGBE 071 D	1.7	0.3	2.0	42	53
SGBE 081 D	2.2	0.4	2.5	54	65
SGBE 022 D	1.4	0.7	2.1	26	36
SGBE 042 D	1.7	0.8	2.5	41	63
SGBE 062 D	2.6	0.4	3.1	65	90
SGBE 072 D	3.1	0.5	3.6	82	113
SGBE 082 D	3.9	0.7	4.6	106	139

Subject to modifications

Küba SG *commercial classic*

Dimensions, Drain

Typ	Dimensions											Drain
	H	B	T	L	E_1	E_2	F	A	W_{min}	GE_1	GE_2	D
	mm	mm	mm	mm	mm	mm	mm	mm	mm	mm	mm	zoll
SGBE 021 D	360	565	429	345	380	-	93	91	200	283	-	G ¾"
SGBE 041 D	460	665	451	345	480	-	93	113	200	333	-	G ¾"
SGBE 061 D	560	815	538	415	530	-	143	130	300	408	-	G ¾"
SGBE 071 D	560	915	618	495	630	-	143	130	300	458	-	G ¾"
SGBE 081 D	560	1,065	618	495	780	-	143	130	300	533	-	G ¾"
SGBE 022 D	360	1,015	429	345	730	365	143	91	200	690	325	G ¾"
SGBE 042 D	460	1,215	451	345	930	465	143	113	200	840	375	G ¾"
SGBE 062 D	560	1,375	538	415	1,030	515	173	130	300	945	430	G ¾"
SGBE 072 D	560	1,575	618	495	1,230	615	173	130	300	1,095	480	G ¾"
SGBE 082 D	560	1,875	618	495	1,530	765	173	130	300	1,320	555	G 1¼"

Subject to modifications

The dimensions are only valid for the standard model design!
Note the differences in dimension among versions and accessories.

Küba SG *commercial classic*

Dimensional drawings

Dimensional drawings Küba SG *commercial classic* (1-2 motors)

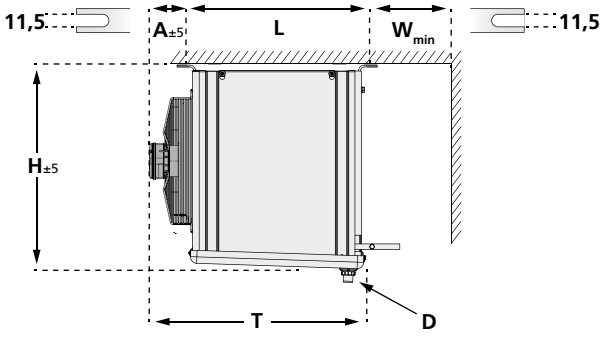

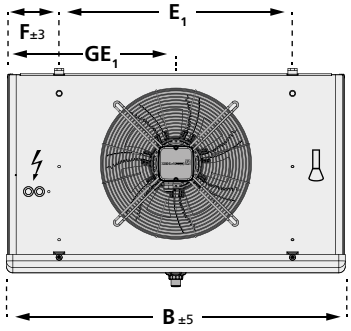

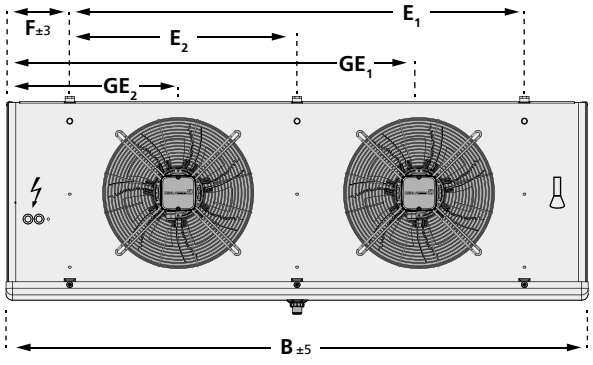

Küba Flange for textile sock & Küba Shut-Up®

The Shut-Up® optimises the defrosting procedure, especially in deep-freeze applications. Shut-Up® is suspended over the fan unit, closing the Air Cooler. Hot air cannot escape.

Features and material:

High-tech microfiber, damp-resistant, vapour resistant, tearproof, ultraflexible, UV-resistant, form- and temperature resistant, double stitched, rot-proof, food-safe, polyester/polyamide, washable at 30°C, chemical purification P

NOTE:

Due to the additional external pressure, the air quantity and Air Cooler capacity change:
When using Shut-Up®: Air volume is reduced by 10% ≙ -5% cooling capacity.
When using von Shut-Up® & Defrost hood: Air volume is reduced by 20% ≙ -10% cooling capacity.
1 Shut-Up® per fan unit required. Delivery not mounted.

Insulated drip tray

Prevents condensed water from forming on the bottom side of the pan, and it reduces the transfer of defrost heat into the cold room.

Width B: +60 mm
Height H: +30 mm
Depth T: +30 mm



NOTE:
Delivery not mounted.

We live our values.

Excellence • Passion • Integrity • Responsibility • GEA-versity

GEA Group is a global engineering company with multi-billion euro sales and operations in more than 50 countries. Founded in 1881, the company is one of the largest providers of innovative equipment and process technology. GEA Group is listed in the STOXX® Europe 600 index.

GEA Heat Exchangers

GEA Küba GmbH

Kühler Weg 1 · 82065 Baierbrunn · Germany
Tel.: ++49(0)89/744 73-0 · Fax: ++49(0)89/744 73-107
kueba@gea.com · www.kueba.com

©Copyright 2015 GEA Küba GmbH · 0094.392BR.SGCC.EN · Status as of 03/2015
Subject to modifications