A3 DO NOT SCALE THIRD ANGLE PROJECTION IF IN DOUBT ASK

" This document is protected by copyright, and the design it contains is protected by both copyright and design right, all such rights being owned by ICG (UK) Limited. This document may also contain information which is confidential to that Company. Neither this document nor the design or information which it contains may therefore be used, sold, licensed, transferred, copied, lent, disclosed to any third party or otherwise reproduced in whole or in part in any manner or form other than with the prior written consent of that Company.

© [20] ICG (UK) Limited. All Rights Reserved."

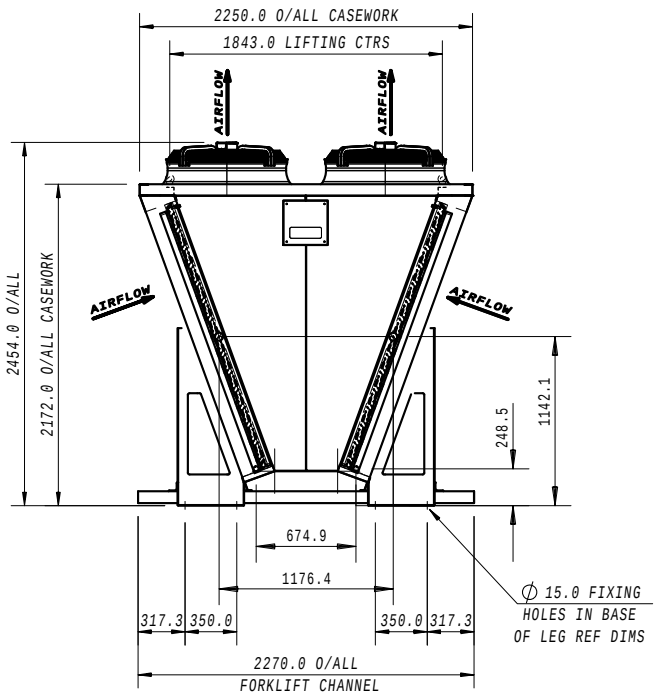

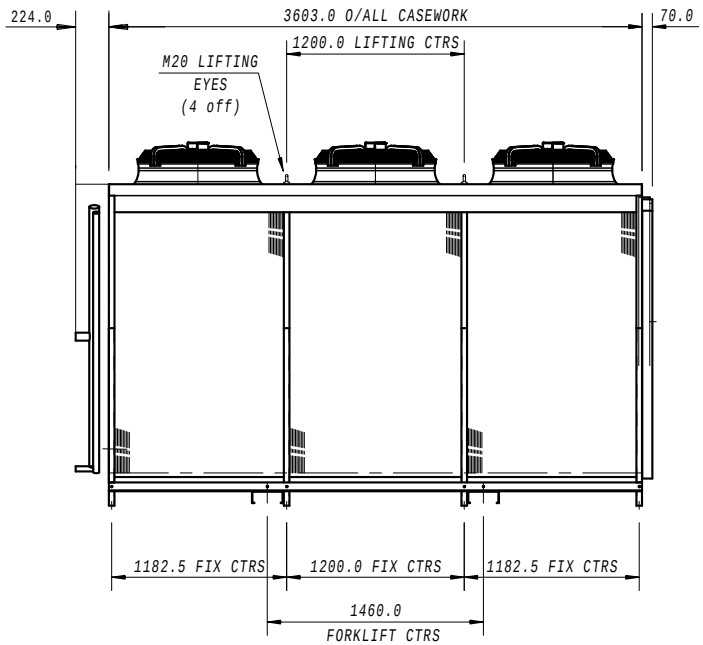

COIL CODE:	YRF600211 -3600
COIL TUBE MATERIAL:-	1/2" x 0.014" Cu
COIL FIN MATERIAL:-	0.13mm Aluminium
SECTIONS PER COIL:-	ONE
CIRCUITS PER SECTION:-	15
HOT GAS INLET :-	2x2.1/8" od
LIQUID OUTLET :-	2x1.3/8" od

CASEWORK MATERIAL:-	GALVANISED STEEL
CASEWORK FINISH:-	RAL7036
APPROX UNIT DRY WEIGHT:-	1292 Kgs

FANSET MANUFACTURER:	EBM
FANSET QUANTITY:	6
FAN TYPE:	AXIAL FANSET
FAN DIAMETER:	
MAX. MOTOR SPEED:	
MOTOR POWER:	
ELECTRICAL SUPPLY:	

ISS	MODIFICATION	SCN	DATE

TOLERANCES ASSEMBLY UNLESS OTHERWISE STATED
SIMPLE ASSY'S (2 to 3 Parts) ±1.0mm
COMPLEX ASSY'S (Multiple Parts) ±3.0mm

MATERIAL

FINISH: AS ABOVE

DATE: 02/02/07 | SCALE: 1:36 | PART: MVA23xL

DRAWN: CAJ | CHECKED: CAJ | FOR: N/A | JOB No.: N/A

searle MANUFACTURING COMPANY
NEWGATE LANE FAREHAM HANTS PO14 1AR

PART No.

ISS: 01

DRG. FILE REF: MVA23xL.01