## LSR 121

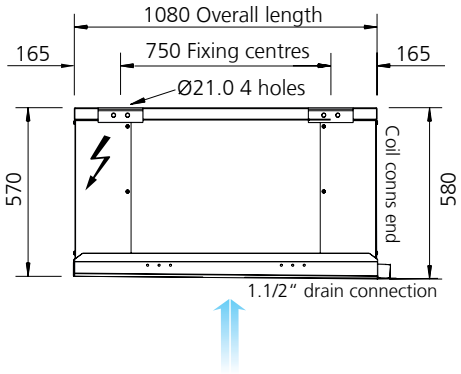


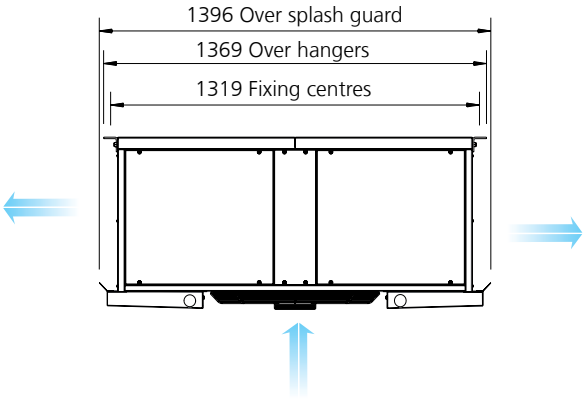


## LSR 122

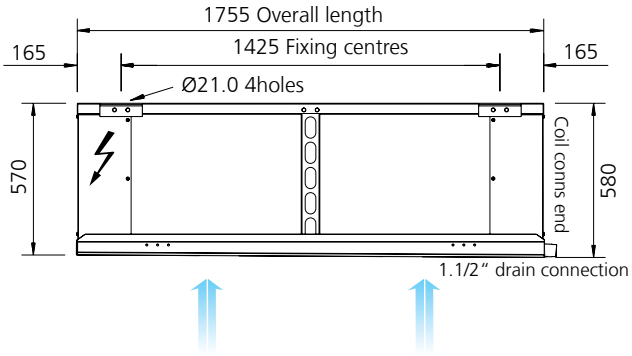


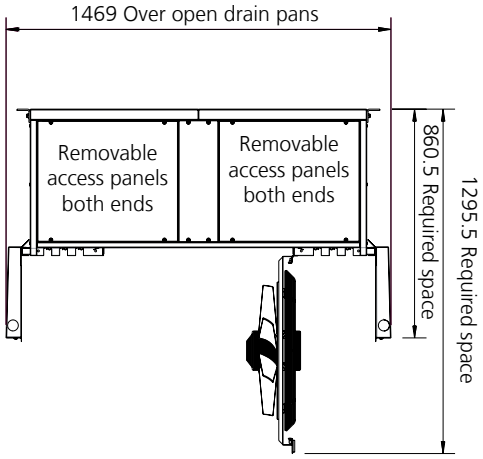


## LSR 123

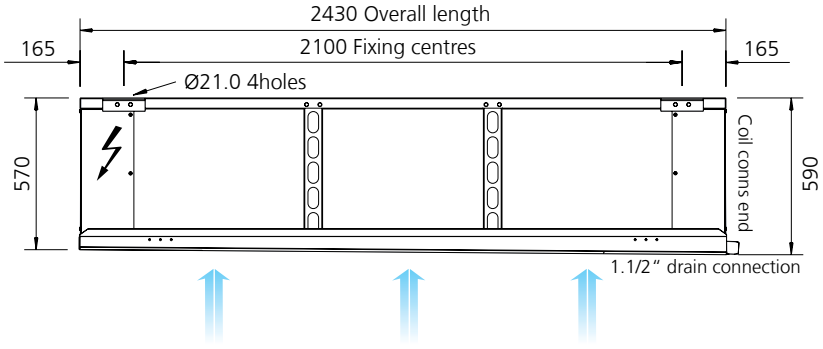


## LSR 124

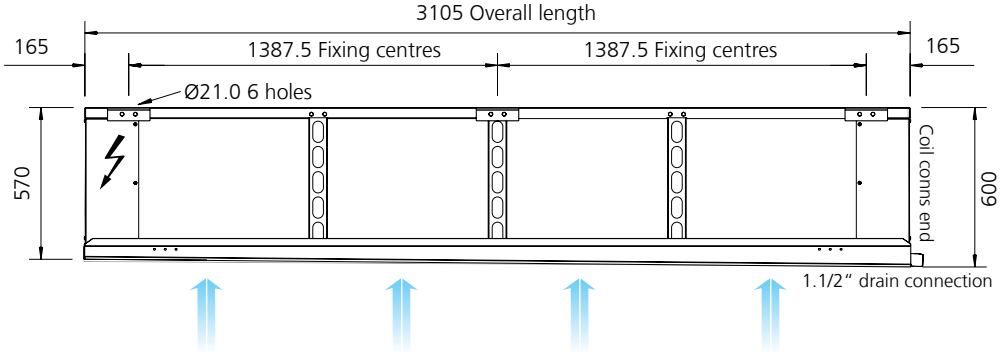


| Model | Cu/Al weight (kg) | Cu/Cu weight (kg) |
|---|---|---|
| LSR121-44 | 117 | 151 |
| LSR121-64 | 130 | 180 |
| LSR122-44 | 180 | 232 |
| LSR122-64 | 200 | 277 |
| LSR123-44 | 237 | 314 |
| LSR123-64 | 266 | 382 |
| LSR124-44 | 301 | 405 |
| LSR124-64 | 341 | 496 |
| LSR121-46 | 114 | 141 |
| LSR121-66 | 125 | 165 |
| LSR122-46 | 175 | 216 |
| LSR122-66 | 192 | 254 |
| LSR123-46 | 230 | 291 |
| LSR123-66 | 256 | 348 |
| LSR124-46 | 292 | 374 |
| LSR124-66 | 326 | 446 |