CHANGING
GEA HEAT EXCHANGERS

www.brand-change.com

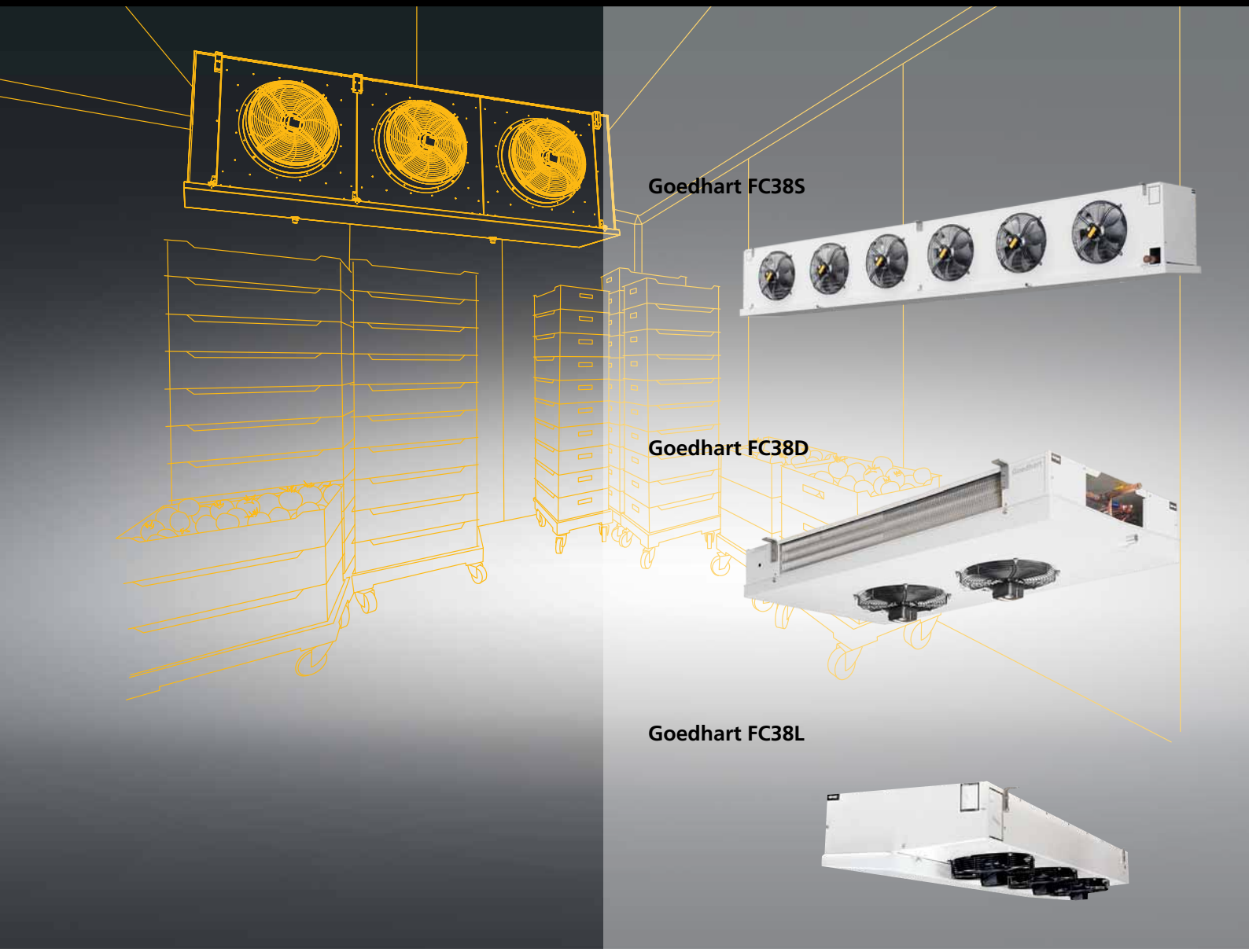

Goedhart Standard products

ErP ready

Air coolers FC38
Cu/Al

R404A - Coolants

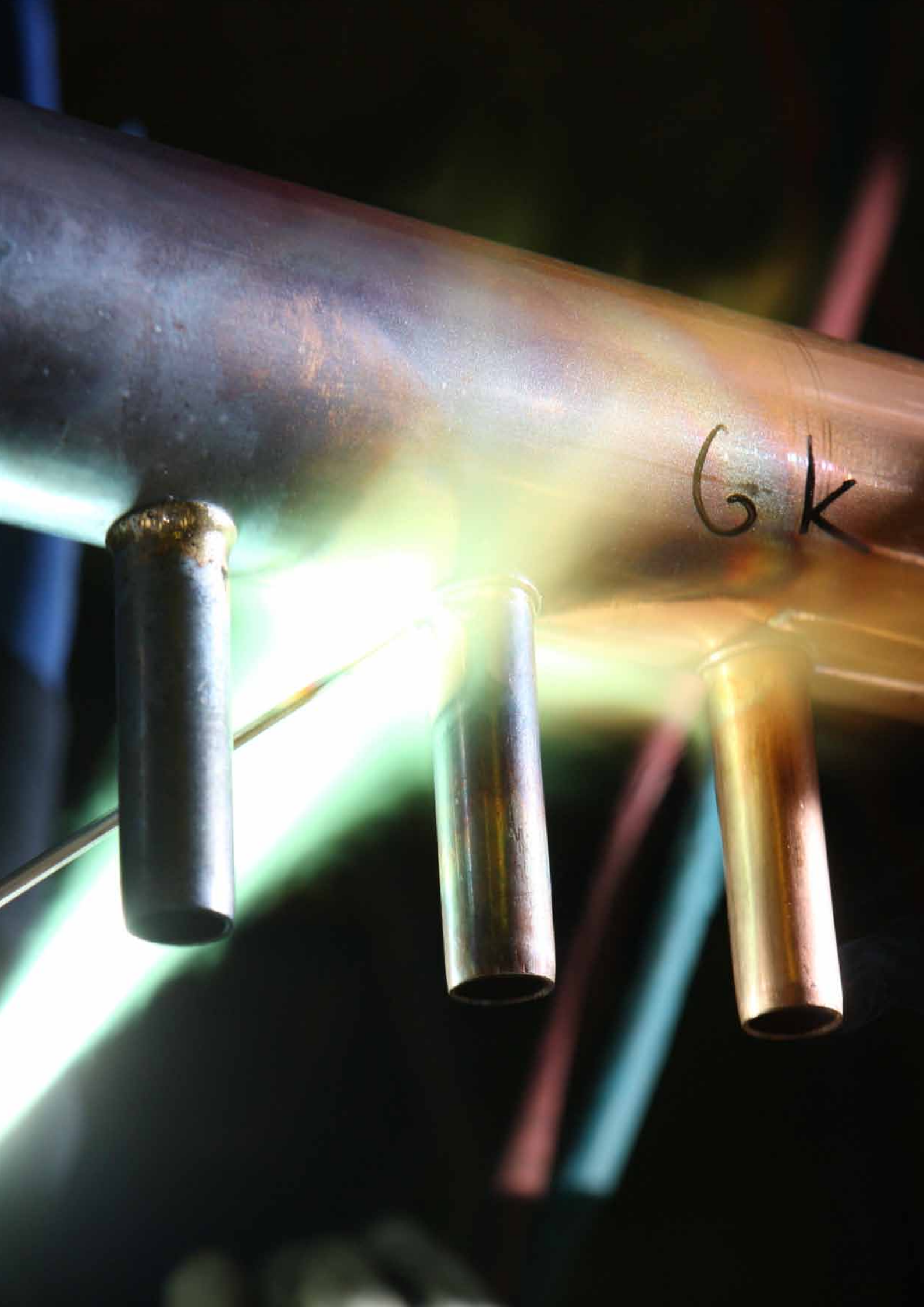
6k

Welcome at Goedhart

Do not settle for compromise, but go for the best cooling solution to suit your situation. That is the philosophy which Goedhart makes himself hard. Since 1935 we develop, produce and deliver worldwide air coolers, air cooled condensers and composite systems for (semi) industrial applications and various markets. Our products are perfect for projects requiring a technically demanding and involving a great deal of flexibility in terms of design, dimensions, accessories and cooling system types and methods is necessary.

To achieve the most optimal and cost efficient cooling system Goedhart uses three 'levels of engineering:

- Level 1 Fully standarized: standard cooling systems available in different sizes
- Level 2 Systematic customized products: custom made cooling systems built from standard modules;
- Level 3 Designed to order products: extensive cooling systems and applications developed especially for the niche market;

Extensive theoretical and practical project analysis by our professional sales engineers will determine which configuration, materials, and level of engineering best fit your program requirements. Additionally, you can use the innovative 'Goedhart Product Catalogue (GPC), the digital design program for all Level 1 and 2 industrial air coolers and air-cooled condensers.

For what level or engineering you choose; Your are with Goedhart in good hands in the field of refrigeration and freezing. This brochure provides information on Cu / Al series, a level 1 standard product

Do you have any further questions, we are happy to help you personally. We thank you in advance for the interest you have shown in Goedhart and its products.



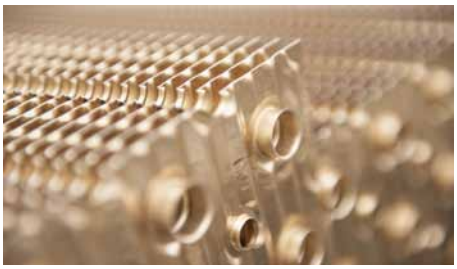

3 Levels of engineering

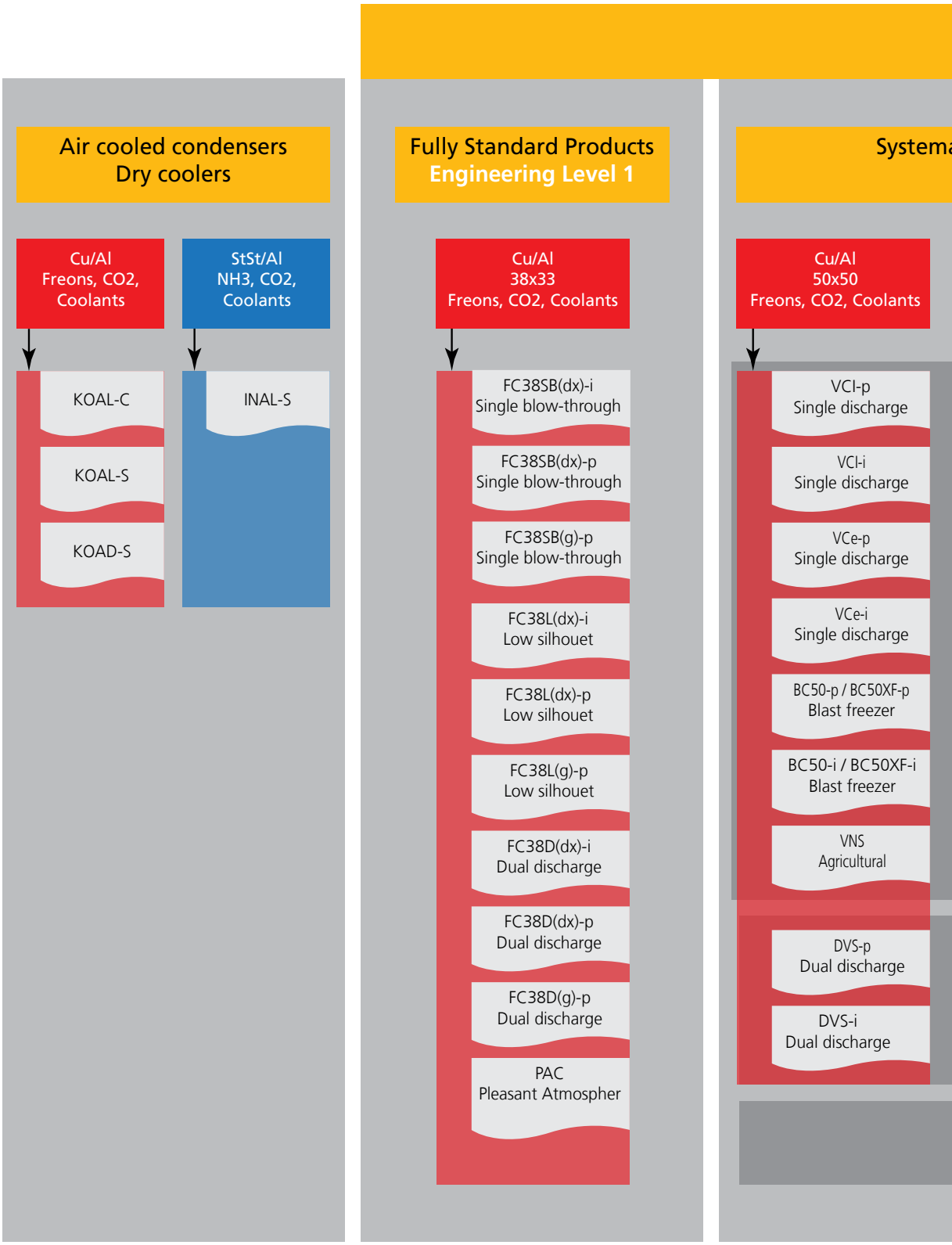

Goedhart´s 3 Levels of engineering

atic Customized Products (SCP)
Engineering Level 2

Designed to order products
Engineering Level 3

StSt/Al - StSt/StSt
50x50
NH3, CO2, Coolants

FeZn
60x60
NH3

Cu/Al
38x33 - 50x50 - 60x60
Freons, CO2, Coolants

StSt/Al - StSt/StSt
50x50 - 60x60
NH3, CO2, Coolants

FeZn
60x60
NH3

VRB / VRZ
Single discharge

VRS
Single discharge

VRe
Single discharge

BR50
Blast freezer

ZFB / ZFZ
Single discharge

DRS
Dual discharge

DZS
Dual discharge

ZGB / ZGZ
Single discharge

KB.v / KB.h

DL.v / DL.h

SLK

LLK.p / LLK.s



TN.p / TN.s

AU.p / AU.s

DU.p / DU.s

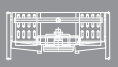

PLK.p / PLK.s



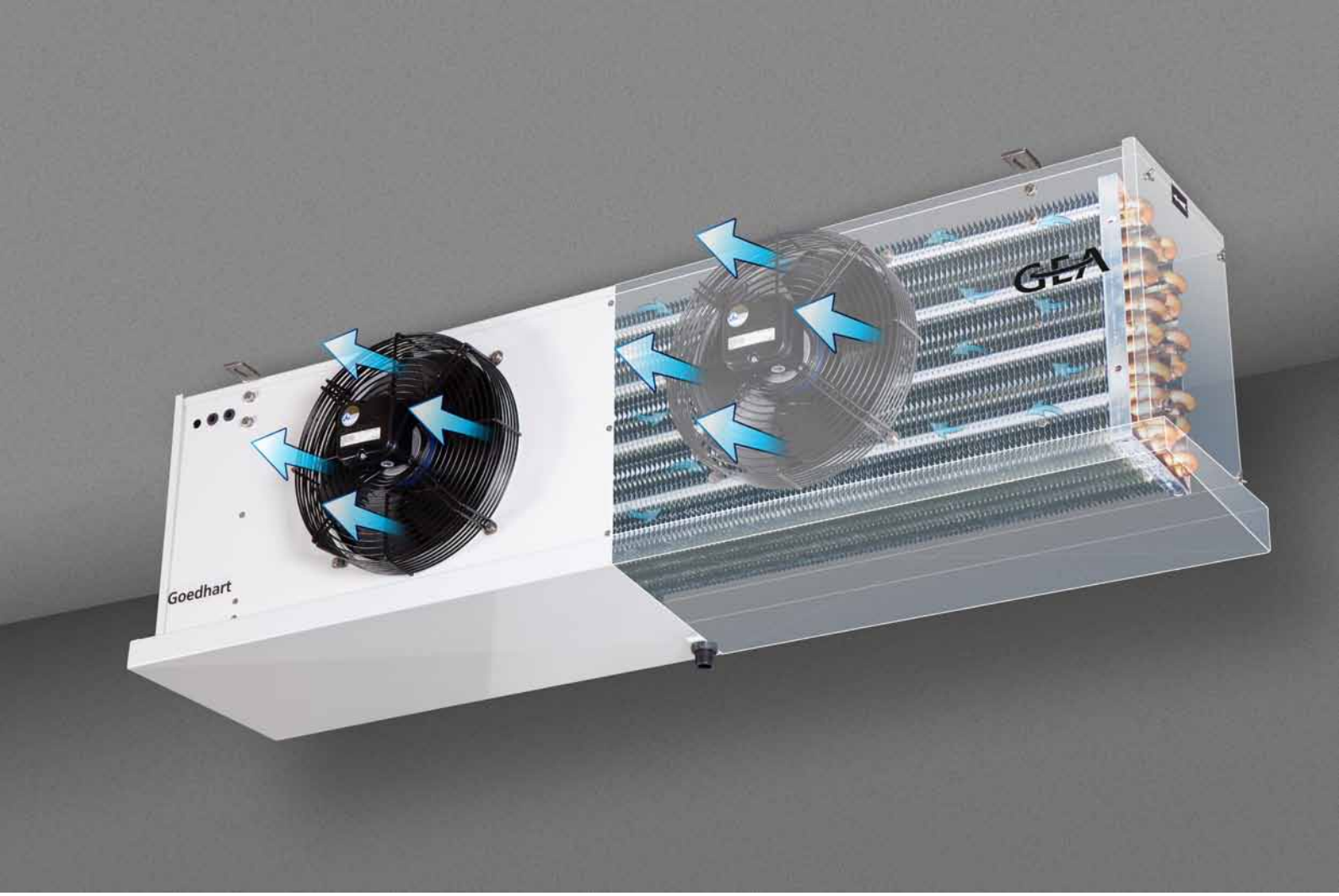

GEA Goedhart FC38 air coolers
Cooling and freezing

The range GEA Goedhart FC38 standard ceiling mounted air coolers are standard air coolers for cooling and freezing applications (FC38S), working/preparation rooms and storage rooms for humidity sensitive products (FC38D) and for cold storage rooms with height limitation (FC38L).
The standard FC38 aircoolers are suitable for all known refrigerants and not corrosive coolants, with the exception of NH3.

Type description

FC38Si(dx) 6.2.40.7-230-E

FC38S	=Ceiling mounted air coolers	2	= Number of fans
FC38D	= Dual discharge air coolers		
FC38L	= Extra low air cooler	40	= Fan diameter in cm
i	= internally enhanced tubes	7	= Fin spacing
p	= plain tubes		
		230	= 1x230V Fan tension
(dx)	= R404A	400	= 3x400V Fan tension
(G)	= coolant		
		E	= Electrical defrost
6	= number of tubes deep	H	= Hot gas defrost

General features

Coil block

- Tube distance : 38x33 mm versprongen
- Tubes : 12mm o.d copper tube
- : I= internally enhanced tubes for refrigerants (dx)
  P= internally plain tubes for coolants(G) and refrigerants (dx)
- Fins : aluminium HT-fins
- Fin spacing : 4 mm : Suitable for applications with air temperatures above 0°C and with expected limited frost
  : 7 mm : Suitable for applications with air temperatures below 0°C and expected frost
- A good thermal with the fins contact because the copper tubes are mechanically expanded into fully collared aluminium fins.
- The suction header is executed with a Schräder valve for testing applications
- All coil blocks for refrigerants are pressure tested to 40 bars. All coil blocks for coolants are pressure tested to 15 bars.
- FC38 aircoolers are supplied with a light overpressure charge.

Goedhart Standard air coolers Cu/Al

Goedhart FC38 General information

Casing

- Standard refrigerant connections are fixed on the left hand side of the unit when looking with the direction of the air flow.
- Construction suitable for mounting to the ceiling.
- The FC38 casing is made from galvanized sheet steel , with exception of:
  - FC38S drip tray is hinged and made from light aluminum.
  - FC38D has a fixed galvanized drip tray.
  - FC38L drip tray is hinged and made from light aluminum.
- The fans of the FC38D are mounted to the outside of the drip tray of the air cooler and are wired.
- Goedhart FC38SB and FC38L air cooler is executed with a short air conduction plate as standard.
- The casing has a corrosion resistant white epoxy spray finish (RAL 9003).
- Almost all fixing materials are made of stainless steel to prevent corrosion.
- A possible hot gas spiral or electric defrost elements will be fixed to the bottom side of the coil

Standard options

Optional extra's	FC38S	FC38D	FC38L
Draw through execution	•		
Insulated driptray	•		
StSt casing	•	•	•
Goldlack fins (4 / 7 mm)	•	•	•
Almg fins (4 mm)	•	•	•

Options on request

Optional extra's	FC38S	FC38D	FC38L
Hot gas defrost	•		
Warm glycol defrost	•		
Fan heating	•		•
Splash plate	•		
StSt tubes	•	•	•

P.E.D.

All air coolers produced by Goedhart comply with the Pressure Equipment Directive 97/23/EC . PED certificates can be downloaded from www.goedhart.nl.

Guarantee

Goedhart gives in confomity with her general conditions of delivery the following guarantee perionde on the Goedhart FC38 air coolers:

- within a 12 month period of product use
- at the latest within 18 months after the time of delivery.

Sound data

The mean sound pressure (LpA @ 3m ± 2 dB (A)) each air cooler is a calculated indication value according to the EN13487 standard parallel pipe. Goedhart uses the fan manufacturer's sound power level (LwA) at the inlet side of the fan. Changes to or by the fan or the product, affect the sound, in these cases, consult the manufacturer for the new indication value. In critical sound requirements, we advise you to consult an expert.

Defrost systems

For room temperatures where ripe formation can be expected and where the coil can not be defrosted by the room air, electrical or hot gas defrost is necessary

Electrical defrost

On request FC38 can be provided with electrical defrost. FC38 is always delivered with heavy defrost. The heater elemenst are rated for 220/240 V and are 400/420 V with zero wire supply. The stainless steel heater elements are fitted in the coilblock in inner tubes which forme a highly conductive medium between the heaters and the fins. In the drip-tray, the heater elements are fitted to the bottom side of the underside of the aluminum inner tray. The heater elements in the coil block are removable from the header side of the unit, whilst the tray heater elements can be removed once the outer tray has been taken off.

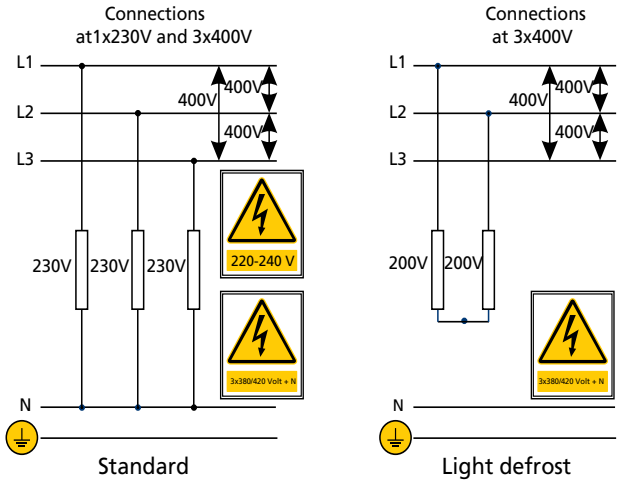

Hot gas defrost

The coil block is suited for hot gas defrost (hot gas supply through the suction header). The drip tray can be provided with a copper hot gas spiral, which is enclosed in special aluminum profiles, which are rigidly secured to underside of the aluminum inner tray.

Mounting & Maintenance

FC38 is delivered in a wooden crate. FC38S will be delivered with the separate drip-tray. When crated, FC38 can be handled by crane or fork-lift truck, which makes it very easy to mount. The driptray of the FC38S is delivered separately. For maintenance and instructions see our manual delivered on order or can be downloaded from our web site www.goedhart.nl.





Fans

GEA Goedhart FC38 aircoolers are executed with Ziehl Abegg: (We reserve the right to alter the manufacturer).

The fans are suitable for operation in air temperatures between -25°C to +40°C. When the air temperature is lower then -25°C, special fans are needed. These speciale fans have a longer delivery time. The protection class is IP54. The fans are not available with stainless steel protection guards
At all GEA Goedhart FC38 air cooler types (FC38S, FC38D and FC38L) the fans are mounted to the outside of aircooler!

The maximum allowable working data in the table and on the name plate of the fans are to operate in an air temperature of +20 °C (air density of ρ = 1,2 kg/m3). For air temperatures lower then +20 °C, the current amperage can be calculated by using the diagram multiplication factor, suitable thermal overloads can then be selected.

1x230V-50Hz
The standard connection tension for the Ziehl Abegg fans is 230V-50Hz-1 phase for the fan diameters Ø250, Ø300, Ø350, Ø400, Ø450 and Ø500. The fan motors of the Ø250, Ø300 and Ø350 mm fans are standard equiped with internally connected thermo contacts. Ø400, Ø450 and Ø500 mm fans are equiped with thermical contacts lead outside.

3x400V-50Hz
The EBMpapst Ø400, Ø450 and Ø500 fan is on request available in 230/400V-50Hz-3 phase. The fan is executed with a thermical contact lead to the outside.

Connecting thermical contacts
If the thermical contacts are not connected the warranty on the fans expires.

Frequency controlling
When a frequency converter is applied, always an All pole sinus filter should be used!

Fan type	Values at 1x230V-50Hz			Sound power indication ach fan LwA (+/-2dB(A))	Wiring diagram
	Speed	+20°C Input	+20°C FLC		
	tpm	[W]	[A]	[dBA]	
4 pole fans (1500 rpm nominial)					
FN025	1370	50	0,24	62	177X
FN030	1290	90	0,39	64	177X
FN035	1390	150	0,65	74	177X
FN045	1390	600	2,90	76	104XB
FN050	1240	720	3,20	77	104XB
6 pole fans (1000 tpm nominal)					
FN040	950	130	0,58	67	104XB
FN050	900	270	1,25	74	104XB

Fan type	Values at 3x400V(Δ)-50Hz			Sound power indication ach fan LwA (+/-2dB(A))	Wiring diagram
	Speed	+20°C Input	+20°C FLC		
	tpm	[W]	[A]	[dBA]	
4 pole fans (1500 rpm nominial)					
FN040	1360	230	0,46	75	108XB
FN045	1350	540	0,66	75	108XB
FN050	1340	840	1,45	78	108XB

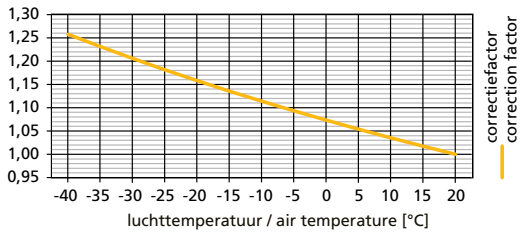

Wiring diagram

Ziehl Abegg 1x230V-50Hz (177X)

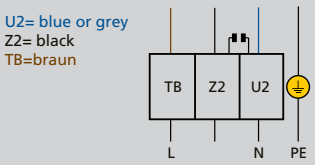

Ziehl Abegg 3x400V (Δ)-50Hz (108XB)

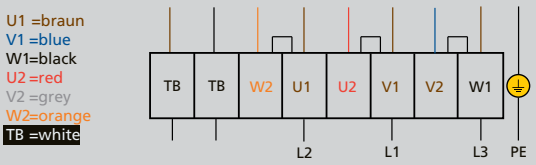

Ziehl Abegg 1x230V-50Hz (104XB)

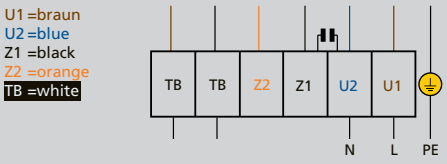

Ziehl Abegg 3x400V (Y)-50Hz (108XB)

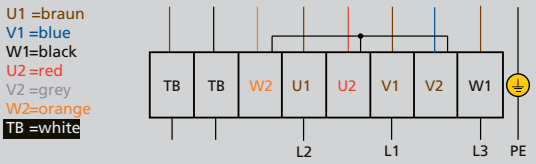

Goedhart FC38 General information

Correction factors DT1 (=Air-on)

The nominale capacities of the Goedhart FC38i(dx) and FC38p(dx) air coolers are based on R-404A direct expansion, DT1 and a RH of 85%. DT1 it the difference between air-on temperature and the evaporation temperature of the cooler. The evaporation temperature is the saturated temperature corresponding to the pressure at the suction outlet of the cooler.

The nominal capacities:

(SC1)	t_o	= 0 °C and DT1= 10 K
(SC2)	t_o	= -8°C and DT1= 8 K
(SC3)	t_o	= - 25°C and DT1= 7 K

Correction factors for various evaporation temperatures and temperature differences (DT1) are as indicated in the tables below. The requested capacity must be multiplied by a correction factor from the table. so that a cooler with the resulting nominal capacity can be chosen from the selection tables.

Q nominal = factor x Q requested

R404A — SC1 DT1 = 10K, Air on = 10°C (0/+10°C)

DT1	Evaporation temperature (°C)									
K	+7	+6	+5	+4	+3	+2	+1	0	-1	-2
6	1,81	1,81	1,82	1,82	1,83	1,83	1,84	1,84	1,84	1,85
7	1,49	1,50	1,50	1,50	1,51	1,51	1,52	1,52	1,52	1,53
8	1,27	1,28	1,28	1,29	1,29	1,29	1,30	1,30	1,30	1,31
9	1,10	1,10	1,11	1,11	1,12	1,12	1,13	1,13	1,13	1,14
10	0,97	0,98	0,98	0,99	0,99	0,99	1,00	1,00	1,00	1,01
11	0,88	0,88	0,88	0,89	0,89	0,90	0,90	0,90	0,90	0,91
12	0,79	0,79	0,79	0,80	0,80	0,81	0,81	0,81	0,81	0,82

R404A — SC2 DT1 = 8K, Air on = 0°C (-8/0°C)

DT1	Evaporation temperature (°C)									
K	-3	-4	-5	-6	-7	-8	-9	-10	-11	-12
6	1,30	1,34	1,38	1,42	1,42	1,43	1,43	1,43	1,44	1,44
7	1,04	1,07	1,10	1,14	1,17	1,18	1,18	1,18	1,19	1,19
8	0,86	0,88	0,91	0,94	0,97	1,00	1,00	1,01	1,01	1,01
9	0,75	0,75	0,77	0,79	0,82	0,84	0,87	0,87	0,87	0,88
10	0,66	0,66	0,66	0,68	0,70	0,72	0,74	0,77	0,77	0,77
11	0,59	0,59	0,59	0,59	0,61	0,63	0,65	0,67	0,69	0,69
12	0,54	0,54	0,54	0,54	0,54	0,55	0,57	0,58	0,60	0,62

R404A — SC3 DT1 = 7K, Air on = -18°C (-25/-18°C)

DT1	Evaporation temperature (°C)									
K	-21	-22	-23	-24	-25	-26	-27	-28	-29	-30
6	1,20	1,20	1,21	1,21	1,21	1,22	1,22	1,23	1,23	1,23
7	0,99	0,99	0,99	1,00	1,00	1,00	1,00	1,01	1,01	1,02
8	0,84	0,84	0,84	0,85	0,85	0,85	0,85	0,86	0,86	0,86
9	0,73	0,73	0,73	0,73	0,73	0,74	0,74	0,74	0,74	0,75
10	0,64	0,64	0,64	0,64	0,65	0,65	0,65	0,65	0,66	0,66
11	0,57	0,57	0,57	0,58	0,58	0,58	0,58	0,58	0,59	0,59
12	0,52	0,52	0,52	0,52	0,52	0,52	0,53	0,53	0,53	0,53

Capacity optimization

To achieve the best possible combination of application, refrigerant and capacity, Goedhart can optimise the coil circuiting, depending on the specific conditions under which the products will be used. FC38 is a standard product to ensure shorter delivery times. The circuiting of these evaporators has been optimized according to the most commonly used coolants/ refrigerants and conditions. Specific applications can vary from this, our sales department is there to assist you in selecting the best circuiting for your application.

Correction factors for coolants

The nominal capacities of the Goedhart FC38p(G) air coolers are based on an air-on temperature of 12°C, a RH of 85% and:

Water	: in / out temperatuur	= +1/+5°C
E-Glycol	: in / out temperatuur	= - 2/+3°C
P-Glycol	: in / out temperatuur	= - 2/+3°C
Pekasol	: in / out temperatuur	= - 2/+3°C
Freezium	: in / out temperatuur	= - 2/+3°C

Correction factors for various air-on temperatures and refrigerants or secondary coolants are as indicated in the tables below. The requested capacity must be multiplied by a correction factor from the table, so that a cooler with te resulting nominal capacity can be chosen from the selection tables.

Q nominal = faktor x Q requested

Water

in/out	Air-on temperature (°C)								
°C	+8	+9	+10	+11	+12	+13	+14	+15	+16
1 / 5	1,99	1,59	1,32	1,14	1,00	0,88	0,78	0,72	0,66
2 / 6		1,95	1,57	1,30	1,12	0,98	0,87	0,78	0,71
3 / 7			1,92	1,54	1,28	1,11	0,97	0,86	0,77
4 / 8				1,94	1,56	1,31	1,13	0,98	0,87
5 / 9					1,86	1,49	1,25	1,07	0,94

E-Glycol 28%

in/out	Air-on temperature (°C)								
°C	+8	+9	+10	+11	+12	+13	+14	+15	+16
-2 / 3	1,81	1,46	1,34	1,16	1,00	0,88	0,82	0,81	0,69
-1 / 4	2,35	1,72	1,41	1,28	1,10	0,96	0,85	0,79	0,75
0 / 5	2,43	2,30	1,64	1,40	1,24	1,06	0,93	0,84	0,76
1 / 6		2,38	2,28	1,59	1,37	1,21	1,05	0,92	0,82
2 / 7			2,28	2,09	1,55	1,35	1,17	1,03	0,91

P-Glycol 28%

in/out	Air-on temperature (°C)								
°C	+8	+9	+10	+11	+12	+13	+14	+15	+16
-2 / 3	1,66	1,45	1,26	1,11	1,00	0,91	0,83	0,76	0,70
-1 / 4	2,00	1,65	1,42	1,24	1,11	1,01	0,90	0,81	0,77
0 / 5	2,48	1,94	1,65	1,41	1,23	1,14	1,00	0,91	0,85
1 / 6		2,46	1,97	1,64	1,42	1,29	1,12	1,00	0,92
2 / 7			2,45	1,96	1,63	1,64	1,28	1,11	1,00

Pekasol 50%

in/out	Air-on temperature (°C)								
°C	+8	+9	+10	+11	+12	+13	+14	+15	+16
-2 / 3	1,68	1,42	1,26	1,11	1,00	0,90	0,82	0,77	0,70
-1 / 4	2,02	1,65	1,42	1,24	1,10	0,98	0,89	0,81	0,76
0 / 5	2,39	1,96	1,62	1,39	1,22	1,07	0,96	0,87	0,80
1 / 6		2,36	1,93	1,60	1,37	1,20	1,06	0,94	0,86
2 / 7			2,32	1,89	1,57	1,35	1,18	1,05	0,94

Freezium 24%

in/uit	Luchtintrede temperatuur (°C)								
°C	+8	+9	+10	+11	+12	+13	+14	+15	+16
-2 / 3	1,66	1,44	1,25	1,11	1,00	0,91	0,83	0,77	0,71
-1 / 4	1,94	1,62	1,42	1,23	1,09	0,98	0,89	0,82	0,76
0 / 5	2,38	1,91	1,59	1,39	1,21	1,07	0,97	0,88	0,81
1 / 6		2,34	1,88	1,57	1,37	1,20	1,06	0,95	0,86
2 / 7			2,30	1,86	1,55	1,35	1,18	1,05	0,94

Goedhart Standard air coolers Cu/Al

Goedhart FC38Si (dx) - R404A

=4 mm Type	Fan diameter	50Hz-4 pole (1500 min⁻¹ nom.) SC1 DT1 = 10K Air on =10°C 0 / +10	SC2 DT1 = 8K Air on =0°C -8 / 0	SC3 DT1 = 7K Air on =-18°C -25 / -18	Air volume	LpA @ 3 m (+/- 2 dB(A))*	Surface	Connections I	Connections K	Weight	Internal volume
FC38S	mm	kW	kW	kW	m³/h	dB(A)	m²	mm	mm	kg	dm³
4.1.25.4	1x250	2,4	1,7		632	40,8	7	12	12	26	2
4.1.30.4	1x300	4,2	2,8		1204	42,7	11	12	28	34	2
6.1.30.4	1x300	4,6	3,2		1033	42,7	16	12	28	39	4
6.1.35.4	1x350	8	5,4		1870	52,5	25	12	28	51	5
6.1.40.4	1x400	11	7,5		2632	53,4	34	16	28	63	7
6.1.45.4	1x450	18,4	12,4		4807	54,3	45	16	28	75	9
4.2.30.4	2x300	8,3	5,6		2399	45,5	22	12	28	50	4
6.2.30.4	2x300	9,1	6,3		2056	45,5	32	12	28	61	6
6.2.35.4	2x350	15,9	10,8		3730	55,3	50	16	28	82	10
6.2.40.4	2x400	22	14,9		5249	56,2	68	16	35	103	13
6.2.45.4	2x450	36,6	24,7		9595	57	90	16	35	122	17
6.2.50.4	2x500	43	29,2		10969	57,8	112	16	42	204	22
6.3.30.4	3x300	13,7	9,4		3080	47,1	49	16	28	81	9
6.3.35.4	3x350	23,8	16,2		5591	56,8	75	16	28	112	14
6.3.40.4	3x400	33,2	22,8		7868	57,7	102	16	35	142	19
6.3.45.4	3x450	54,9	37,1		14382	58,4	134	16	42	174	25
6.3.50.4	3x500	64,7	44,0		16440	59,3	168	16	54	291	32
6.4.30.4	4x300	18,2	12,5		4103	48,2	65	16	28	104	12
6.4.35.4	4x350	31,5	21,6		7450	57,9	99	16	35	143	19
6.4.40.4	4x400	44,3	30,3		10485	58,7	136	22	42	183	25
6.4.45.4	4x450	73,3	49,4		19169	59,4	179	22	54	222	33
6.4.50.4	4x500	86,1	58,3		21911	60,2	224	28	54	376	42
6.5.45.4	5x450	92,1	62,1		23956	60,1	223	22	54	267	41
6.6.45.4	6x450	110,1	74,1		28744	60,7	268	28	54	322	50

Air cooler details

=7 mm Type	Fan diameter	50Hz-4 pole (1500 min⁻¹ nom.) SC1 DT1 = 10K Air on =10°C 0 / +10	SC2 DT1 = 8K Air on =0°C -8 / 0	SC3 DT1 = 7K Air on =-18°C -25 / -18	Air volume	LpA @ 3 m (+/- 2 dB(A))*	Surface	Connections I	Connections K	Weight	Internal volume
FC38S	mm	kW	kW	kW	m³/h	dB(A)	m²	mm	mm	kg	dm³
4.1.25.7	1x250	1,8	1,2	0,9	720	40,8	4	12	12	25	2
4.1.30.7	1x300	3,1	2,1	1,6	1442	42,7	7	12	28	32	2
6.1.30.7	1x300	4	2,8	2,0	1291	42,7	10	12	28	36	4
6.1.35.7	1x350	6,6	4,5	3,3	2216	52,5	15	12	28	46	5
6.1.40.7	1x400	9,3	6,3	4,6	3137	53,4	21	16	28	57	7
6.1.45.7	1x450	12,3	9,9	7,3	5676	54,3	27	16	28	67	9
4.2.30.7	2x300	6,2	4,2	3,1	2875	45,5	13	12	28	47	4
6.2.30.7	2x300	8,1	5,5	4,0	2573	45,5	19	12	28	56	6
6.2.35.7	2x350	13,3	9	6,6	4423	55,3	30	16	28	74	10
6.2.40.7	2x400	18,2	12,5	9,0	6264	56,2	41	16	28	92	13
6.2.45.7	2x450	24,5	19,8	14,5	11336	57	54	16	35	109	17
6.2.50.7	2x500	35,4	23,8	17,5	13252	57,8	67	16	35	186	22
6.3.30.7	3x300	12,1	8,2	6,0	3855	47,1	29	12	28	74	9
6.3.35.7	3x350	19,9	13,5	9,9	6631	56,8	45	16	28	100	14
6.3.40.7	3x400	27,7	18,9	13,9	9391	57,7	61	16	28	126	19
6.3.45.7	3x450	36,7	29,5	21,4	16998	58,4	80	16	42	152	25
6.3.50.7	3x500	53,1	35,6	26,3	19868	59,3	101	16	42	263	32
6.4.30.7	4x300	15,8	10,8	7,9	5137	48,2	39	16	28	93	12
6.4.35.7	4x350	26,5	18	13,2	8837	57,9	60	16	35	127	19
6.4.40.7	4x400	36,7	24,9	18,3	12517	58,7	82	16	35	161	25
6.4.45.7	4x450	48,9	39,5	28,9	22657	59,4	107	16	42	193	33
6.4.50.7	4x500	71	47,6	34,9	26482	60,2	134	28	54	339	42
6.5.45.7	5x450	61,1	49,2	36,3	28319	60,1	134	22	54	229	41
6.6.45.7	6x450	73,7	59,1	42,8	33979	60,7	161	22	54	279	49

Air cooler details

* = Sound pressure indication (LpA) at 3 m distance each air cooler (+/- 2 dB(A)) , free field conditions, according EN13487

** = The standard tension of the fans is 1x230V, with the exception of the 400 mm fan, 4 poles is only available in 3x400V execution

Goedhart Standard air coolers Cu/Al

Goedhart FC38Si (dx) - R404A

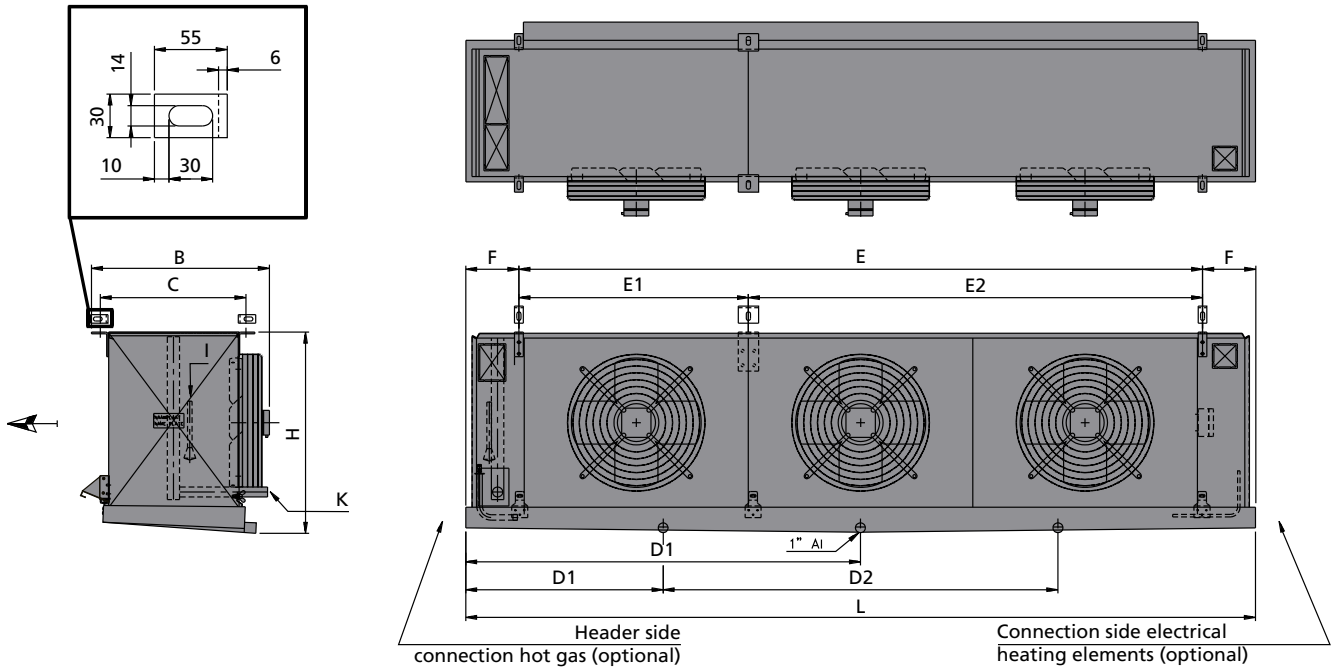

EC-Declarations

Connection ≤ 35 mm	: Declaration of incorporation (SEP)
Connection 42mm and 54 mm	: module A
Group of fluid	: 2
PS	: 28 bar
TS	: +55 / -40 °C

Type	Dimensions										Electrical defrost at 3x400V-50Hz					
	L	B	H	C	E	E1	E2	F	D1	D2	Coil block		Drip tray		Standard	Light
FC38S	mm	mm	mm	mm	mm	mm	mm	mm	mm	mm	number	O [mm]	number	O [mm]	kW	kW**
4.1.25.*	690	510	395	400	406			142	345		2x L=1000	66	1x L=1600	200	1,4	
4.1.30.*	765	510	470	400	481			142	383		2x L=1300	66	1x L=1600	200	1,6	
6.1.30.*	765	510	470	400	481			142	383		2x L=1300	66	1x L=1600	200	1,6	
6.1.35.*	970	640	550	500	606			182	485		3x L=1600	132	1x L=2200	300	2,8	
6.1.40.*	1070	640	625	500	706			182	535		3x L=1900	132	1x L=2500	300	3,3	
6.1.45.*	1170	735	700	500	806			182	585		5x L=1900	132	1x L=2500	300	4,8	3,7
4.2.30.*	1210	510	470	400	926			142	605		2x L=2200	66	1x L=2500	200	2,8	
6.2.30.*	1210	510	470	400	926			142	605		2x L=2200	66	1x L=2500	200	2,8	
6.2.35.*	1540	640	550	500	1176			182	770		3x L=2800	132	1x L=3100	300	4,8	
6.2.40.*	1740	640	625	500	1376			182	870		3x L=3100	132	1x L=3700	300	5,4	
6.2.45.*	1940	735	700	500	1576			182	970		5x L=3700	132	1x L=4000	300	9,4	7,1
6.2.50.*	2040	835	850	600	1576			232	1020		5x L=3700	132	1x L=4300	400	9,6	7,2
6.3.30.*	1655	510	470	400	1371			142	828		2x L=3100	66	1x L=3700	200	4,1	
6.3.35.*	2110	640	550	500	1746			182	1055		3x L=4000	132	1x L=4600	300	6,1	
6.3.40.*	2410	640	625	500	2046			182	1205		3x L=4600	132	1x L=5200	300	8,0	
6.3.45.*	2710	735	700	500	2346			182	1355		5x L=5200	132	1x L=5800	300	13,5	10,2
6.3.50.*	2810	835	850	600	2346			232	1405		5x L=5200	132	2x L=5800	400	13,5	10,2
6.4.30.*	2100	510	470	400	1816			142	1050		2x L=4000	66	1x L=4600	200	5,3	
6.4.35.*	2680	640	550	500	2316			182	1340		3x L=5200	132	1x L=5800	300	9,1	
6.4.40.*	3080	640	625	500	2716			182	770	1540	3x L=5800	132	1x L=6700	300	10,3	
6.4.45.*	3480	735	700	500		1558	1558	182	870	1740	5x L=6700	132	1x L=7300	300	17,6	13,4
6.4.50.*	3580	835	850	600		1558	1558	232	895	1790	5x L=6700	132	1x L=7600	400	17,8	13,5
6.5.45.*	4250	640	700	500		1558	2328	182	1063	2125	10x L=4300	-	2x L=4600	-	22,0	16,6
6.6.45.*	5020	640	700	500		2328	2328	182	1255	2510	10x L=4900	-	2x L=5200	-	25,1	18,9

Dimensions & Electrical defrost

Goedhart Standard air coolers Cu/Al

Goedhart FC38Di (dx) - R404A

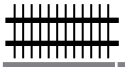 =4 mm

Type	Fan diameter	50Hz-4 pole				50Hz-6 pole				Surface	Connections		Weight	Internal volume	Air cooler details
		SC1 DT1 = 10K Air on =10°C 0 / +10	SC2 DT1 = 8K Air on =0°C -8 / 0	Air volume	LpA @ 3 m (+/- 2 dB(A))*	SC1 DT1 = 10K Air on =10°C 0 / +10	SC2 DT1 = 8K Air on =0°C -8 / 0	Air volume	LpA @ 3 m (+/- 2 dB(A))*		I	K			
FC38D	mm	kW	kW	m³/h	dB(A)	kW	kW	m³/h	dB(A)	m²	mm	mm	kg	dm³	
6.1.30.4	1x300	4,4	3,1	1005	42,6					16	12	28	35	3	
6.1.35.4	1x350	6,6	4,5	1644	52,5					20	12	28	45	4	
6.2.30.4	2x300	8,6	5,9	1952	45,4					30	12	28	60	6	
6.2.35.4	2x350	11,9	8,1	2956	55,3					34	16	28	78	7	
6.2.40.4	2x400	20	13,7	4861	56,1	15,2	10,5	3326	48,1	61	16	35	133	12	
6.3.30.4	3x300	13,3	9,2	3026	46,9					48	16	28	85	9	
6.3.35.4	3x350	16,8	11,4	4187	56,9					48	16	28	116	9	
6.3.40.4	3x400	30,1	20,6	7297	57,6	22,9	15,8	4993	49,6	91	16	35	181	17	
6.4.30.4	4x300	17,2	11,8	3910	48,0					61	16	28	102	11	
6.4.35.4	4x350	21,5	14,7	5402	58,0					61	16	28	139	11	
6.4.40.4	4x400	37,1	25,3	9104	58,8	29,1	19,4	6262	50,8	110	16	42	212	20	

 =7 mm

Type	Fan diameter	50Hz-4 pole				50Hz-6 pole				Surface	Connections		Weight	Internal volume	Air cooler details
		SC1 DT1 = 10K Air on =10°C 0 / +10	SC2 DT1 = 8K Air on =0°C -8 / 0	Air volume	LpA @ 3 m (+/- 2 dB(A))*	SC1 DT1 = 10K Air on =10°C 0 / +10	SC2 DT1 = 8K Air on =0°C -8 / 0	Air volume	LpA @ 3 m (+/- 2 dB(A))*		I	K			
FC38D	mm	kW	kW	m³/h	dB(A)	kW	kW	m³/h	dB(A)	m²	mm	mm	kg	dm³	
6.1.30.7	1x300	3,9	2,6	1260	42,6					9	12	28	31	3	
6.1.35.7	1x350	5,5	3,8	2015	52,5					12	12	28	39	4	
6.2.30.7	2x300	7,5	5,1	2463	45,4					18	12	28	52	6	
6.2.35.7	2x350	10,1	6,8	3718	55,3					21	16	28	67	7	
6.2.40.7	2x400	16,8	11,4	5924	56,1	13,1	9,0	3976	48,1	36	16	35	119	12	
6.3.30.7	3x300	11,6	7,9	3791	46,9					29	16	28	74	9	
6.3.35.7	3x350	14,3	9,7	5331	56,9					29	16	28	107	9	
6.3.40.7	3x400	25,2	17,1	8889	57,6	19,6	13,3	5967	49,6	55	16	35	154	17	
6.4.30.7	4x300	15	10,2	4933	48,0					36	16	28	89	11	
6.4.35.7	4x350	18,4	12,4	6921	58,0					36	16	28	129	11	
6.4.40.7	4x400	31,2	21,1	11311	58,8	24,6	16,9	7630	50,8	66	16	42	188	20	

* = Sound pressure indication (LpA) at 3 m distance each air cooler (+/- 2 dB(A)) , free field conditions, according EN13487

** = The standard tension of the fans is 1x230V, with the exception of the 400 mm fan, 4 poles is only available in 3x400V execution

Goedhart Standard air coolers Cu/Al

Goedhart FC38Di (dx) - R404A

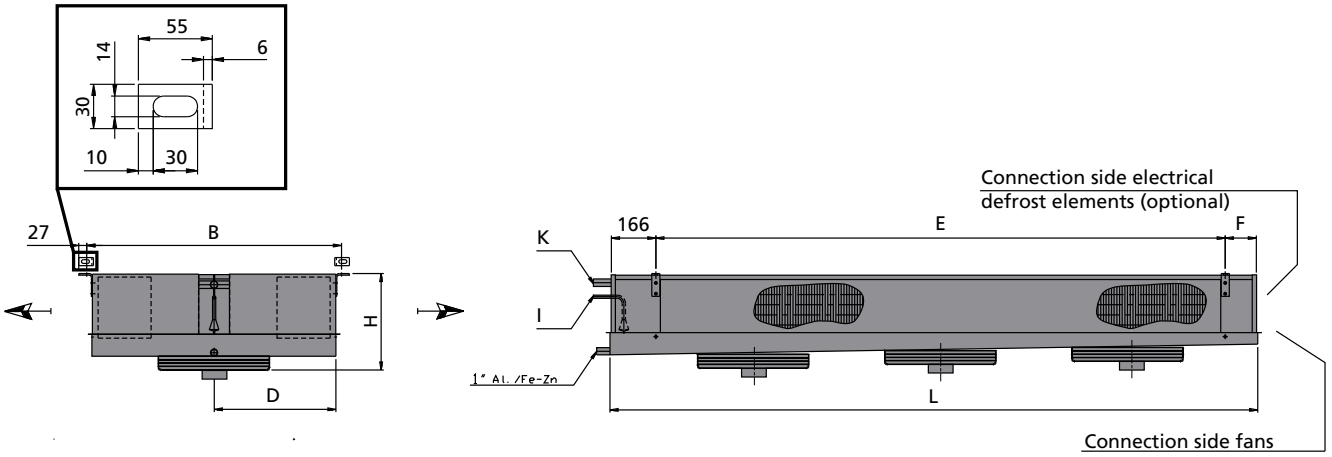

Fans mounted to the outside of the driptray!

EC-Declarations

Connection ≤ 35 mm	: Declaration of incorporation (SEP)
Connection 42mm and 54 mm	: module A
Group of fluid	: 2
PS	: 28 bar
TS	: +55 / -40 °C

Type	Dimensions						Electrical defrost at 3x400V-50Hz					
	L	B	H	D	E	F	Coil block		Drip tray		Standard	Light
FC38D	mm	mm	mm	mm	mm	mm	number	O [mm]	number	O [mm]	kW	kW**
6.1.30.*	925	850	305	405	575	166	2x L=1600	132	2x L=1600	150	2,5	
6.1.35.*	1080	850	330	405	730	166	2x L=1900	132	2x L=1900	150	3,0	
6.2.30.*	1425	850	325	405	1075	166	2x L=2500	132	2x L=2500	150	4,1	
6.2.35.*	1570	850	350	405	1220	166	2x L=2800	132	2x L=2800	150	4,6	
6.2.40.*	1775	950	420	455	1425	166	4x L=3100	132	2x L=3400	150	8	6,1
6.3.30.*	2025	850	325	405	1675	166	2x L=3700	132	2x L=3700	150	6,2	
6.3.35.*	2025	850	350	405	1675	166	2x L=3700	132	2x L=3700	150	6,2	
6.3.40.*	2475	950	420	455	2125	166	4x L=4600	132	2x L=4600	150	11,6	8,8
6.4.30.*	2475	850	325	405	2125	166	2x L=4600	132	2x L=4600	150	7,8	
6.4.35.*	2475	850	350	455	2125	166	2x L=4600	132	2x L=4600	150	7,8	
6.4.40.*	2850	950	420	480	2550	116	4x L=5500	132	2x L=5500	150	14,0	10,6

Goedhart Standard air coolers Cu/Al

Goedhart FC38Li (dx) - R404A

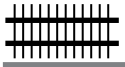 =4 mm

Type	Fan diameter	50Hz-4 pole (1500 min⁻¹ nom.) SC1 DT1 = 10K Air on =10°C 0 / +10	SC2 DT1 = 8K Air on =0°C -8 / 0	SC3 DT1 = 7K Air on =-18°C -25 / -18	Air volume	LpA @ 3 m (+/- 2 dB(A))*	Surface	Connections I	Connections K	Weight	Internal volume	Air cooler details
FC38L	mm	kW	kW	kW	m³/h	dB(A)	m²	mm	mm	kg	dm³	
6.1.25.4	1x250	2,3	1,6		510	40,7	9	12	12	15	2	
6.1.30.4	1x300	3,8	2,6		876	42,6	13	12	28	20	3	
6.1.40.4	1x400	9,8	6,7		2362	53,4	29	16	28	40	6	
6.2.25.4	2x250	4,6	3,2		1020	43,5	18	12	28	25	4	
6.2.30.4	2x300	7,7	5,3		1753	45,4	26	12	28	35	5	
6.2.40.4	2x400	19,5	13,3		4724	56,1	58	16	35	60	11	
6.3.30.4	3x300	11,5	7,9		2629	46,9	39	16	28	45	7	
6.3.40.4	3x400	29,5	20,2		7086	57,5	87	16	35	90	16	
6.4.30.4	4x300	15,2	10,5		3505	47,9	52	16	28	60	10	

 =7 mm

Type	Fan diameter	50Hz-4 pole (1500 min⁻¹ nom.) SC1 DT1 = 10K Air on =10°C 0 / +10	SC2 DT1 = 8K Air on =0°C -8 / 0	SC3 DT1 = 7K Air on =-18°C -25 / -18	Air volume	LpA @ 3 m (+/- 2 dB(A))*	Surface	Connections I	Connections K	Weight	Internal volume	Air cooler details
FC38L	mm	kW	kW	kW	m³/h	dB(A)	m²	mm	mm	kg	dm³	
6.1.25.7	1x250	2	1,4	1,0	612	40,7	5	12	12	15	2	
6.1.30.7	1x300	3,4	2,3	1,7	1130	42,6	8	12	28	20	3	
6.1.40.7	1x400	8,3	5,6	4,1	2903	53,4	17	16	28	30	6	
6.2.25.7	2x250	4,1	2,8	2,0	1225	43,5	11	12	28	20	4	
6.2.30.7	2x300	6,8	4,7	3,4	2261	45,4	16	12	28	30	5	
6.2.40.7	2x400	16,3	11,1	8,1	5807	56,1	35	12	35	55	11	
6.3.30.7	3x300	10,1	6,9	5,1	3391	46,9	23	16	28	55	7	
6.3.40.7	3x400	24,9	16,8	12,4	8710	57,5	52	16	35	80	16	
6.4.30.7	4x300	13,7	9,3	6,8	4521	47,9	31	16	28	55	10	

* = Sound pressure indication (LpA) at 3 m distance each air cooler (+/- 2 dB(A)) , free field conditions, according EN13487

** = The standard tension of the fans is 1x230V, with the exception of the 400 mm fan, 4 poles is only available in 3x400V execution

Goedhart Standard air coolers Cu/Al

Goedhart FC38Li (dx) - R404A

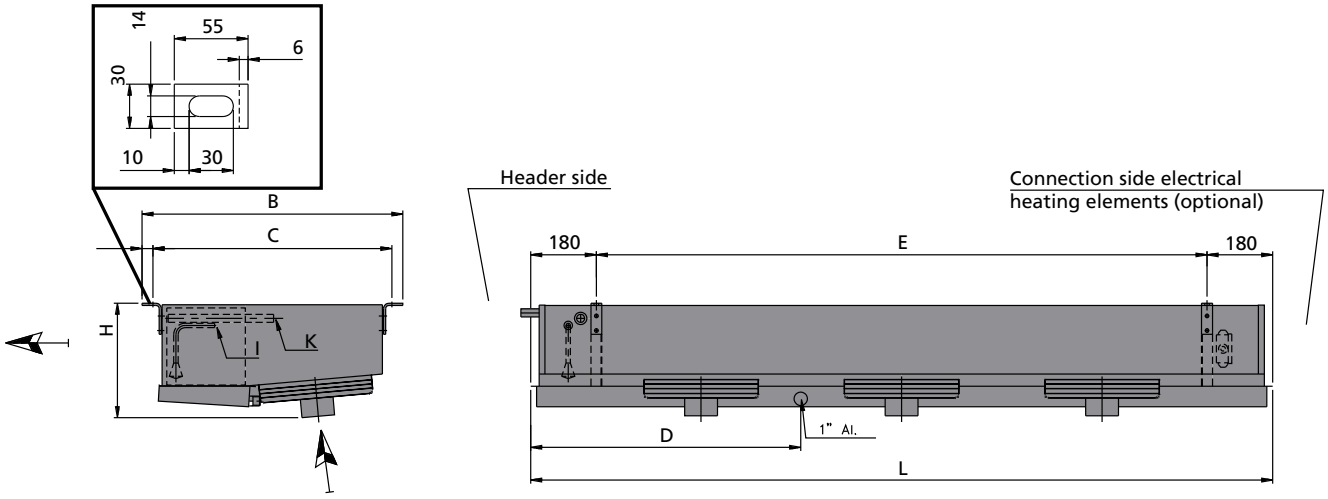

EC-Declarations

Connection ≤ 35 mm	: Declaration of incorporation (SEP)
Connection 42mm and 54 mm	: module A
Group of fluid	: 2
PS	: 28 bar
TS	: +55 / -40 °C

Type	Dimensions					Electrical defrost at 3x400V-50Hz				Standard
	L	B	H	E	D1	Coil block		Drip tray		
FC38L	mm	mm	mm	mm	mm	number	O [mm]	number	O [mm]	kW
6.1.25.*	890	705	280	530	245	2x L=1300	132	1x L=1300	175	1,5
6.1.30.*	990	705	315	630	295	2x L=1600	132	1x L=1600	175	1,9
6.1.40.*	1190	865	465	830	295	3x L=1900	132	1x L=2200	175	3,2
6.2.25.*	1390	705	280	1030	695	2x L=2500	132	1x L=2500	175	3,1
6.2.30.*	1590	705	315	1230	795	2x L=2800	132	1x L=2800	175	3,5
6.2.40.*	1990	865	465	1630	995	3x L=3700	132	1x L=3700	175	6,2
6.3.30.*	2190	705	315	1830	795	2x L=4000	132	1x L=4000	175	5,0
6.3.40.*	2790	865	465	2430	995	3x L=5200	132	1x L=5200	175	8,8
6.4.30.*	2790	705	315	2430	1395	2x L=5200	132	1x L=5200	175	6,6

Goedhart Standard air coolers Cu/Al

Goedhart FC38Sp (G) - coolants

=4 mm	1x230V-50Hz-4 pole (1500 min⁻¹ nom.)																						
	E-Glycol 28% -2 / 3 °C (in/uit temp.)			Water 1 / 5 °C (in/uit temp.)			P-Glycol 34% -2 / 3 °C (in/uit temp.)			Pekasol 50% -2 / 3 °C (in/uit temp.)			Freezium 24% -2 / 3 °C (in/uit temp.)						Connections			
Type	Capacity	Volume flow	Pressure drop	Capacity	Volume flow	Pressure drop	Capacity	Volume flow	Pressure drop	Capacity	Volume flow	Pressure drop	Capacity	Volume flow	Pressure drop	Air volume	LpA @ 3 m (+/- 2 dB(A))*	Surface	I	K	Weight	Internal volume
FC38S	kW	m³/h	kPa	kW	m³/h	kPa	kW	m³/h	kPa	kW	m³/h	kPa	kW	m³/h	kPa	m³/h	dB(A)	m²	mm	mm	kg	dm³
4.1.25.4	1,8	0,33	10,1	1,9	0,41	11,6	1,9	0,35	98,1	1,9	0,32	133,6	1,8	0,35	14,6	632	40,8	7	16	16	26	2
4.1.30.4	3	0,56	22,2	4,0	0,85	49,2	2,9	0,53	47,0	4,7	0,81	55,9	4,7	0,92	68,9	1204	42,7	11	16	16	34	3
6.1.30.4	3,8	0,71	18,8	4,4	0,95	29,5	4,0	0,72	96,5	5,2	0,89	32,4	5,1	1,00	41,1	1033	42,7	16	16	16	39	4
6.1.35.4	6,2	1,15	22,3	7,8	1,68	48,2	6,3	1,14	89,1	9,5	1,62	56,0	9,4	1,84	68,0	1870	52,5	25	22	22	51	6
6.1.40.4	10,6	1,97	55,5	11,1	2,37	59,7	8,5	1,54	84,0	13,5	2,32	70,5	12,6	2,48	84,5	2632	53,4	34	28	28	63	8
6.1.45.4	17,7	3,28	64,9	17,9	3,83	65,5	12,3	2,24	94,5	21,8	3,73	77,1	20,7	4,06	92,6	4807	54,3	45	28	28	75	10
4.2.30.4	8,6	1,61	83,8	8,3	1,76	76,0	5,2	0,95	49,3	10,1	1,73	90,5	9,2	1,80	43,9	2399	45,5	22	22	22	50	5
6.2.30.4	9,9	1,85	73,2	9,4	2,00	65,1	6,9	1,26	55,1	11,5	1,98	78,2	10,8	2,13	92,7	2056	45,5	32	22	22	61	7
6.2.35.4	17,7	3,29	91,4	16,2	3,47	76,8	11,2	2,04	78,2	20,0	3,43	92,6	19,2	3,77	68,7	3730	55,3	50	28	28	82	10
6.2.40.4	25	4,65	97,5	22,7	4,85	80,3	15,5	2,80	95,4	28,0	4,80	97,0	27,2	5,34	80,4	5249	56,2	68	35	35	103	14
6.2.45.4	39,1	7,26	85,5	36,4	7,78	73,9	21,8	3,96	93,9	44,7	7,66	88,4	43,5	8,54	82,2	9595	57,0	90	42	42	122	18
6.2.50.4	45,8	8,51	83,0	43,4	9,27	88,4	26,6	4,82	93,3	52,7	9,04	86,1	51,5	10,11	84,0	10969	57,8	112	54	54	204	24
6.3.30.4	14,8	2,74	59,3	14,3	3,06	91,1	9,9	1,79	101,8	17,2	2,95	63,9	17,1	3,36	75,8	3080	47,1	49	28	28	81	10
6.3.35.4	26,4	4,90	76,3	24,6	5,26	91,3	16,1	2,93	98,7	29,9	5,12	77,7	29,0	5,70	91,9	5591	56,8	75	35	35	112	15
6.3.40.4	37,3	6,94	82,8	34,3	7,33	88,5	21,6	3,92	96,5	41,9	7,18	82,7	41,0	8,04	97,6	7868	57,7	102	42	42	142	21
6.3.45.4	60,0	11,15	90,6	55,0	11,74	63,9	29,9	5,43	88,8	67,6	11,59	91,1	65,4	12,85	76,9	14382	58,4	134	54	54	174	28
6.3.50.4	70,8	13,17	91,8	65,0	13,88	76,5	37,1	6,72	84,6	79,9	13,70	92,0	77,8	15,27	82,6	16440	59,3	168	64	64	291	35
6.4.30.4	21,1	3,92	86,9	19,0	4,05	70,3	13,1	2,38	98,4	23,4	4,02	85,3	22,7	4,46	67,4	4103	48,2	65	35	35	104	13
6.4.35.4	36,4	6,77	93,9	32,6	6,97	99,8	20	3,63	83,3	40,3	6,92	91,5	38,8	7,62	83,1	7450	57,9	99	42	42	143	20
6.4.40.4	51,0	9,48	94,6	45,6	9,74	92,7	27,1	4,92	94,9	56,3	9,66	75,6	54,7	10,74	89,3	10485	58,7	136	54	54	183	27
6.4.45.4	80,8	15,03	92,6	73,0	15,60	66,9	37,1	6,73	83,8	89,7	15,38	92,0	87,4	17,15	73,8	19169	59,4	179	54	54	222	36
6.4.50.4	95,8	17,80	96,0	86,9	18,56	70,5	45,6	8,28	89,0	107,1	18,36	84,8	104	20,42	81,4	21911	60,2	224	64	64	376	47
6.5.45.4	100,1	18,61	93,6	91,1	19,46	68,7	43,6	7,90	79,4	112,6	19,30	82,7	109,3	21,46	71,8	23956	60,1	223	64	64	267	45
6.6.45.4	120,9	22,48	84,6	109,6	23,41	64,0	48,7	8,84	67,5	134,7	23,10	84,2	131,2	25,76	70,4	28744	60,7	268	76	76	322	53

Air cooler details

=7 mm	1x230V-50Hz-4 pole (1500 min⁻¹ nom.)																						
	E-Glycol 28% -2 / 3 °C (in/uit temp.)			Water 1 / 5 °C (in/uit temp.)			P-Glycol 34% -2 / 3 °C (in/uit temp.)			Pekasol 50% -2 / 3 °C (in/uit temp.)			Freezium 24% -2 / 3 °C (in/uit temp.)						Connections			
Type	Capacity	Volume flow	Pressure drop	Capacity	Volume flow	Pressure drop	Capacity	Volume flow	Pressure drop	Capacity	Volume flow	Pressure drop	Capacity	Volume flow	Pressure drop	Air volume	LpA @ 3 m (+/- 2 dB(A))*	Surface	I	K	Weight	Internal volume
FC38S	kW	m³/h	kPa	kW	m³/h	kPa	kW	m³/h	kPa	kW	m³/h	kPa	kW	m³/h	kPa	m³/h	dB(A)	m²	mm	mm	kg	dm³
4.1.25.7	1,6	0,31	37,4	1,8	0,38	67,8	1,6	0,29	80,1	2,2	0,37	79,8	1,5	0,29	96,3	720	40,8	4	16	16	25	2
4.1.30.7	2,5	0,47	18,4	3,0	0,64	29,5	2,4	0,44	39,2	3,5	0,60	32,0	3,4	0,68	41,1	1442	42,7	7	16	16	32	3
6.1.30.7	4,0	0,74	71,0	4,0	0,86	75,6	3,5	0,64	84,6	5	0,85	90,0	4,1	0,81	29,6	1291	42,7	10	16	16	36	4
6.1.35.7	6,9	1,29	86,2	6,7	1,42	79,5	5,4	0,98	76,7	8,2	1,40	95,2	7,5	1,47	46,6	2216	52,5	15	22	22	46	6
6.1.40.7	9,9	1,84	90,5	9,3	1,99	80,2	7,4	1,33	72,4	11,5	1,97	96,4	10,8	2,11	57,9	3137	53,4	21	22	22	57	8
6.1.45.7	9,6	1,78	70,1	12,4	2,65	67,2	9,5	1,73	80,6	14,7	2,52	79,9	14,6	2,86	95,4	4164	48,3	27	28	28	67	10
4.2.30.7	4,7	0,87	19,7	6,3	1,34	46,3	4,5	0,81	41,7	7,6	1,31	54,4	7,6	1,49	65,6	2875	45,5	13	16	16	47	4
6.2.30.7	7,6	1,42	22,9	8,0	1,71	48,6	6,5	1,18	91,5	9,8	1,68	57,7	9,7	1,91	69,1	2573	45,5	19	22	22	56	7
6.2.35.7	13,5	2,52	56,5	13,5	2,89	91,6	9,8	1,78	68,1	16,2	2,78	63,8	16,1	3,16	76,1	4423	55,3	30	28	28	74	10
6.2.40.7	19,5	3,62	61,5	18,8	4,02	82,4	13,5	2,45	83,0	22,8	3,90	66,6	22,6	4,44	79,1	6264	56,2	41	35	35	92	14
6.2.45.7	26,6	4,94	99,9	24,9	5,33	82,1	17,7	3,22	81,2	30,3	5,20	99,3	29,5	5,80	88,1	8311	51,0	54	35	35	109	18
6.2.50.7	38,3	7,13	85,2	35,7	7,62	91,2	23,9	4,34	80,8	43,5	7,46	86,7	42,5	8,35	66,5	13252	57,8	67	42	42	186	23
6.3.30.7	13,5	2,51	82,0	12,3	2,62	68,3	9,2	1,68	90,1	15,2	2,60	82,8	14,5	2,85	97,7	3855	47,1	29	28	28	74	10
6.3.35.7	21,9	4,07	75,9	20,4	4,35	94,2	14,1	2,56	86,2	24,8	4,25	77,0	24,0	4,72	90,9	6631	56,8	45	35	35	100	15
6.3.40.7	30,6	5,70	73,2	28,3	6,05	61,4	19	3,45	84,4	34,6	5,93	98,9	33,8	6,63	87,6	9391	57,7	61	42	42	126	20
6.3.45.7	41,1	7,64	86,1	37,5	8,00	87,1	24,5	4,45	96,0	45,9	7,87	85,9	45,0	8,84	83,5	12458	52,4	80	42	42	152	27
6.3.50.7	59,4	11,04	97,6	53,7	11,48	93,3	32,8	5,95	87,5	66,0	11,31	95,6	64,3	12,62	95,9	19868	59,3	101	54	54	263	34
6.4.30.7	17,4	3,24	60,4	16,5	3,53	82,8	11,8	2,13	87,5	20,0	3,43	63,4	19,9	3,90	75,1	5137	48,2	39	28	35	93	13
6.4.35.7	30	5,58	86,3	27,2	5,81	94,8	18,2	3,30	98,7	33,3	5,71	84,7	32,6	6,39	99,7	8837	57,9	60	42	42	127	20
6.4.40.7	41,6	7,74	79,0	37,8	8,08	80,0	24	4,35	83,5	46,9	8,04	97,6	45,5	8,94	92,0	12517	58,7	82	54	54	161	27
6.4.45.7	55,5	10,32	94,8	50,3	10,74	89,4	31,2	5,67	87,1	62,0	10,63	92,5	60,0	11,77	93,5	16606	53,4	107	54	54	193	35
6.4.50.7	79	14,69	89,8	71,5	15,27	94,0	41,4	7,50	89,8	88,4	15,16	88,2	86,0	16,88	92,0	26482	60,2	134	64	64	339	45
6.5.45.7	69,9	12,99	86,7	62,8	13,42	79,6	37,5	6,81	93,4	77,6	13,30	96,8	75,5	14,81	88,8	20753	54,1	134	64	64	229	44
6.6.45.7	84,2	15,66	92,0	75,4	16,10	81,9	42,7	7,75	97,5	93,1	15,97	99,7	90,9	17,85	85,6	24900	54,7	161	64	64	279	52

Air cooler details

* = Sound pressure indication (LpA) at 3 m distance each air cooler (+/- 2 dB(A)) , free field conditions, according EN13487

** = The standard tension of the fans is 1x230V, with the exception of the 400 mm fan, 4 poles is only available in 3x400V execution

Goedhart Standard air coolers Cu/Al

Goedhart FC38Sp (G) - coolants

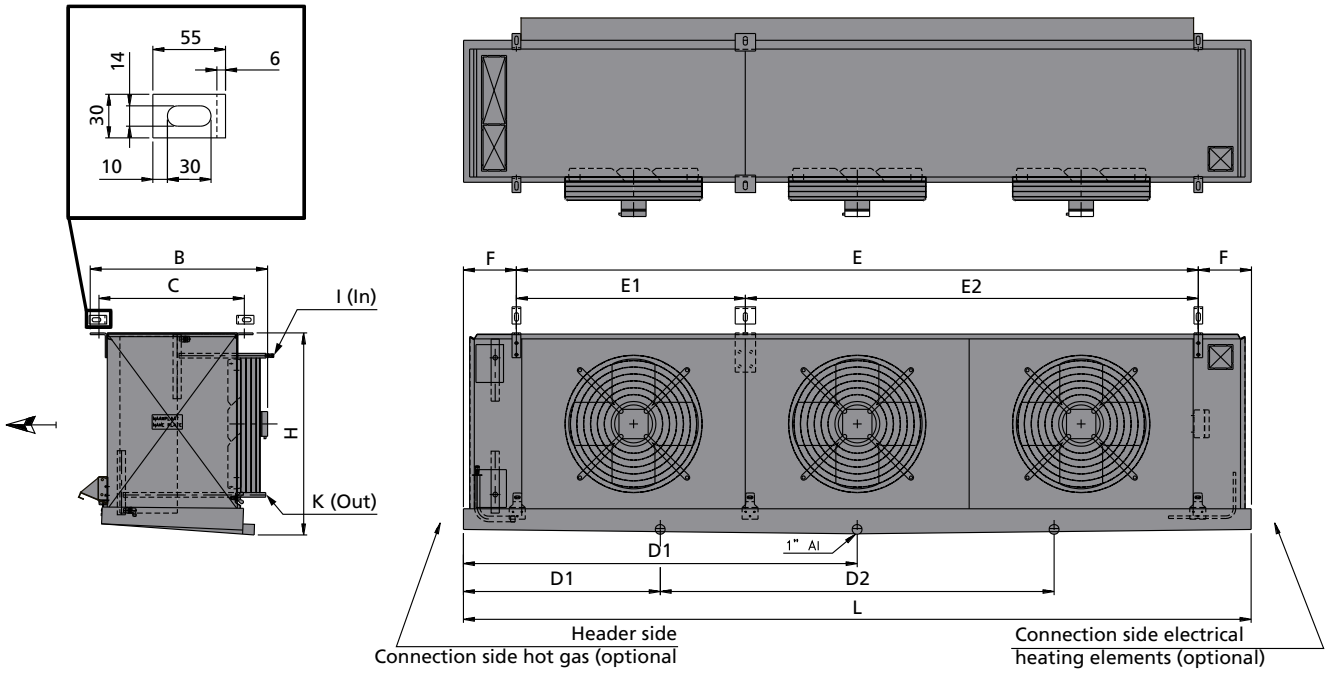

EC-Declarations

According	: Declaration of incorporation (SEP)
Group of fluid	: 2
PS	: 28 bar
TS	: +55 / -40 °C

Type	Dimensions										Electrical defrost at 3x400V-50Hz					
	L	B	H	C	E	E1	E2	F	D1	D2	Coil block		Drip tray		Standard	Light
FC38S	mm	mm	mm	mm	mm	mm	mm	mm	mm	mm	number	O [mm]	number	O [mm]	kW	kW**
4.1.25.*	690	510	395	400	406			142	345		2x L=1000	66	1x L=1600	200	1,4	
4.1.30.*	765	510	470	400	481			142	383		2x L=1300	66	1x L=1600	200	1,6	
6.1.30.*	765	510	470	400	481			142	383		2x L=1300	66	1x L=1600	200	1,6	
6.1.35.*	970	640	550	500	606			182	485		3x L=1600	132	1x L=2200	300	2,8	
6.1.40.*	1070	640	625	500	706			182	535		3x L=1900	132	1x L=2500	300	3,3	
6.1.45.*	1170	735	700	500	806			182	585		5x L=1900	132	1x L=2500	300	4,8	3,7
4.2.30.*	1210	510	470	400	926			142	605		2x L=2200	66	1x L=2500	200	2,8	
6.2.30.*	1210	510	470	400	926			142	605		2x L=2200	66	1x L=2500	200	2,8	
6.2.35.*	1540	640	550	500	1176			182	770		3x L=2800	132	1x L=3100	300	4,8	
6.2.40.*	1740	640	625	500	1376			182	870		3x L=3100	132	1x L=3700	300	5,4	
6.2.45.*	1940	735	700	500	1576			182	970		5x L=3700	132	1x L=4000	300	9,4	7,1
6.2.50.*	2040	835	850	600	1576			232	1020		5x L=3700	132	1x L=4300	400	9,6	7,2
6.3.30.*	1655	510	470	400	1371			142	828		2x L=3100	66	1x L=3700	200	4,1	
6.3.35.*	2110	640	550	500	1746			182	1055		3x L=4000	132	1x L=4600	300	6,1	
6.3.40.*	2410	640	625	500	2046			182	1205		3x L=4600	132	1x L=5200	300	8,0	
6.3.45.*	2710	735	700	500	2346			182	1355		5x L=5200	132	1x L=5800	300	13,5	10,2
6.3.50.*	2810	835	850	600	2346			232	1405		5x L=5200	132	2x L=5800	400	13,5	10,2
6.4.30.*	2100	510	470	400	1816			142	1050		2x L=4000	66	1x L=4600	200	5,3	
6.4.35.*	2680	640	550	500	2316			182	1340		3x L=5200	132	1x L=5800	300	9,1	
6.4.40.*	3080	640	625	500	2716			182	770	1540	3x L=5800	132	1x L=6700	300	10,3	
6.4.45.*	3480	735	700	500		1558	1558	182	870	1740	5x L=6700	132	1x L=7300	300	17,6	13,4
6.4.50.*	3580	835	850	600		1558	1558	232	895	1790	5x L=6700	132	1x L=7600	400	17,8	13,5
6.5.45.*	4250	640	700	500		1558	2328	182	1063	2125	10x L=4300	-	2x L=4600	-	22,0	16,6
6.6.45.*	5020	640	700	500		2328	2328	182	1255	2510	10x L=4900	-	2x L=5200	-	25,1	18,9

Dimensions & Electrical defrost

Goedhart Standard air coolers Cu/Al

Goedhart FC38Dp (G) - coolants

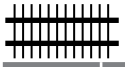 =4 mm

Type	1x230V-50Hz-4 pole (1500 min⁻¹ nom.)																					Air cooler details
	E-Glycol 28% -2 / 3 °C (In/out temp.)			Water 1 / 5 °C (In/out temp.)			P-Glycol 34% -2 / 3 °C (In/out temp.)			Pekasol 50% -2 / 3 °C (In/out temp.)			Freezium 24% -2 / 3 °C (In/out temp.)			Air volume	LpA @ 3 m (+/- 2 dB(A))*	Surface	Connections		Weight	Internal volume	
	Capacity	Volume flow	Pressure drop	Capacity	Volume flow	Pressure drop	Capacity	Volume flow	Pressure drop	Capacity	Volume flow	Pressure drop	Capacity	Volume flow	Pressure drop				I	K		
FC38D	kW	m³/h	kPa	kW	m³/h	kPa	kW	m³/h	kPa	kW	m³/h	kPa	kW	m³/h	kPa	m³/h	dB(A)	m²	mm	mm	kg	dm³	
6.1.30.4	4,8	0,89	89,7	4,6	0,98	81,3	3,7	0,67	76,8	5,6	0,96	97,5	3,4	0,67	32,6	1005	42,6	16	16	16	35	3	
6.1.35.4	4,7	0,88	57,3	6,4	1,37	60,5	4,5	0,82	49,6	7,5	1,28	71,4	7,4	1,44	85,6	1644	52,5	20	16	16	45	4	
6.2.30.4	8,8	1,64	51,0	8,8	1,88	50,2	6,2	1,12	80,6	10,7	1,84	59,8	10,6	2,09	71,3	1952	45,4	30	22	22	60	6	
6.2.35.4	7,4	1,38	53,3	12,4	2,64	52,5	7,8	1,42	58,5	13,9	2,38	62,2	13,7	2,69	74,4	2956	55,3	34	28	28	78	7	
6.2.40.4	21,4	3,99	65,5	20,4	4,37	87,3	13,4	2,44	72,7	25	4,29	70,2	23,4	4,59	83,5	4861	56,1	61	35	35	133	12	
6.3.30.4	14,2	2,65	99,9	13,7	2,93	79,5	9,7	1,76	86,1	16,8	2,89	96,7	16,7	3,28	66,0	3026	46,9	48	28	28	85	9	
6.3.35.4	18,6	3,46	85,9	17,2	3,67	72,6	10,9	1,98	98,7	21,1	3,62	87,3	19,5	3,82	64,7	4187	56,9	48	28	28	116	9	
6.3.40.4	32,1	5,96	78,2	31,3	6,70	86,8	18,7	3,40	99,8	37,5	6,44	79,0	37,2	7,31	93,3	7297	57,6	91	42	42	181	18	
6.4.30.4	17,4	3,24	67,0	18,1	3,88	88,7	11,2	2,04	78,5	21,4	3,68	68,1	21,3	4,18	80,4	3910	48,0	61	28	28	102	12	
6.4.35.4	23,2	4,32	67,8	21,9	4,68	88,1	12,5	2,27	89,3	26,9	4,61	70,9	26,6	5,23	84,2	5402	58,0	61	35	35	139	12	
6.4.40.4	40,5	7,52	82,9	38,6	8,25	86,7	22,8	4,14	78,3	46,6	7,98	82,7	46,2	9,06	97,6	9104	58,8	110	42	42	212	21	

 =7 mm

Type	1x230V-50Hz-4 pole (1500 min⁻¹ nom.)																					Air cooler details
	E-Glycol 28% -2 / 3 °C (In/out temp.)			Water 1 / 5 °C (In/out temp.)			P-Glycol 34% -2 / 3 °C (In/out temp.)			Pekasol 50% -2 / 3 °C (In/out temp.)			Freezium 24% -2 / 3 °C (In/out temp.)			Air volume	LpA @ 3 m (+/- 2 dB(A))*	Surface	Connections		Weight	Internal volume	
	Capacity	Volume flow	Pressure drop	Capacity	Volume flow	Pressure drop	Capacity	Volume flow	Pressure drop	Capacity	Volume flow	Pressure drop	Capacity	Volume flow	Pressure drop				I	K		
FC38D	kW	m³/h	kPa	kW	m³/h	kPa	kW	m³/h	kPa	kW	m³/h	kPa	kW	m³/h	kPa	m³/h	dB(A)	m²	mm	mm	kg	dm³	
6.1.30.7	3,4	0,63	31,6	3,9	0,84	60,8	3,3	0,60	67,5	4,8	0,82	72,0	3,0	0,60	86,3	1260	42,6	10	16	16	31	3	
6.1.35.7	4,2	0,78	20,4	5,2	1,12	17,0	4,0	0,72	43,3	5,8	1,00	49,1	5,7	1,12	59,7	2015	52,5	12	16	16	39	4	
6.2.30.7	5,8	1,08	17,9	7,5	1,61	88,5	5,6	1,01	71,5	9,1	1,57	44,2	9,1	1,78	53,3	2463	45,4	18	22	22	52	6	
6.2.35.7	11,1	2,07	84,9	10,3	2,20	72,7	7,0	1,27	97,9	12,7	2,18	87,5	11,2	2,19	52,5	3718	55,3	21	22	22	67	7	
6.2.40.7	11,6	2,16	70,4	17,4	3,72	96,8	11,9	2,15	95,7	20,5	3,51	73,8	20,3	3,98	87,6	5924	56,1	36	28	28	119	12	
6.3.30.7	8,3	1,54	70,4	11,7	2,51	59,6	8,7	1,57	76,5	14,3	2,45	72,1	14,2	2,79	85,1	3791	46,9	29	28	28	74	9	
6.3.35.7	14,9	2,76	56,1	14,4	3,08	90,0	9,8	1,77	87,5	17,6	3,02	61,8	17,5	3,43	73,6	5331	56,9	29	28	28	107	9	
6.3.40.7	28,1	5,23	72,7	25,8	5,52	83,4	16,6	3,02	88,0	31,8	5,46	73,8	30,4	5,97	87,3	8889	57,6	55	35	35	154	18	
6.4.30.7	17,4	3,23	82,6	15,6	3,33	67,0	10,2	1,84	70,2	19,3	3,31	81,4	18,1	3,55	95,8	4933	48,0	36	28	28	89	12	
6.4.35.7	11,0	2,05	74,5	19,1	4,08	99,5	11,3	2,05	79,7	22,5	3,85	76,1	22,3	4,37	90,0	6921	58,0	36	35	35	129	12	
6.4.40.7	35,2	6,54	74,4	32,1	6,86	80,1	20,4	3,70	91,0	39,6	6,79	97,5	38,1	7,48	88,5	11311	58,8	66	42	42	188	21	

* = Sound pressure indication (LpA) at 3 m distance each air cooler (+/- 2 dB(A)) , free field conditions, according EN13487

** = The standard tension of the fans is 1x230V, with the exception of the 400 mm fan, 4 poles is only available in 3x400V execution

Goedhart Standard air coolers Cu/Al

Goedhart FC38Dp (G) - coolants

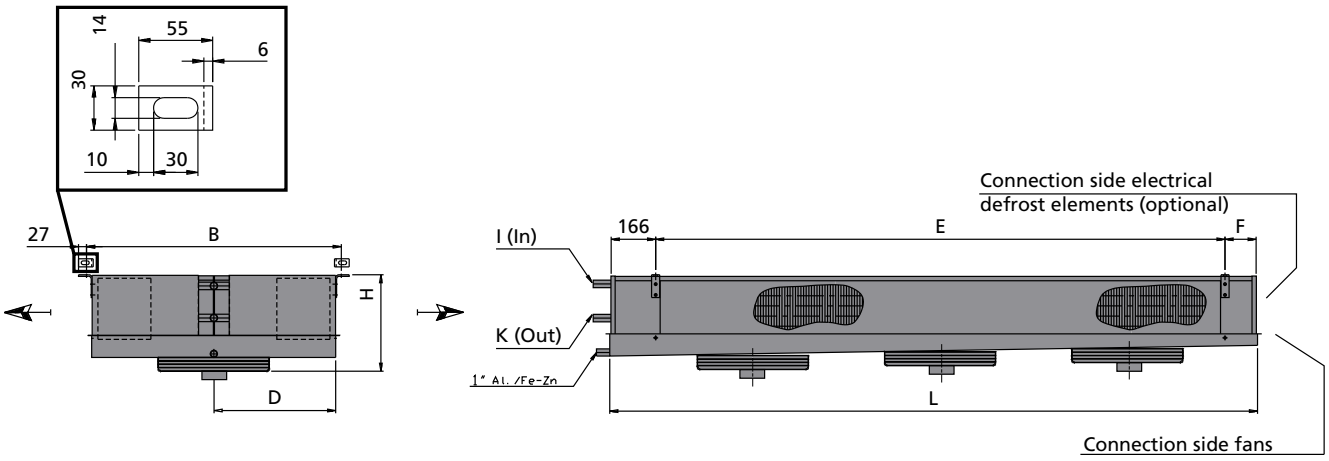

Fans mounted to the outside of the driptray!

EC-Declarations

According	: Declaration of incorporation (SEP)
Group of fluid	: 2
PS	: 28 bar
TS	: +55 / -40 °C

Type	Dimensions						Electrical defrost at 3x400V-50Hz					
	L	B	H	D	E	F	Coil block		Drip tray		Standard	Light
FC38D	mm	mm	mm	mm	mm	mm	number	O [mm]	number	O [mm]	kW	kW**
6.1.30.*	925	850	305	405	575	166	2x L=1600	132	2x L=1600	150	2,5	
6.1.35.*	1080	850	330	405	730	166	2x L=1900	132	2x L=1900	150	3,0	
6.2.30.*	1425	850	325	405	1075	166	2x L=2500	132	2x L=2500	150	4,1	
6.2.35.*	1570	850	350	405	1220	166	2x L=2800	132	2x L=2800	150	4,6	
6.2.40.*	1775	950	420	455	1425	166	4x L=3100	132	2x L=3400	150	8	6,1
6.3.30.*	2025	850	325	405	1675	166	2x L=3700	132	2x L=3700	150	6,2	
6.3.35.*	2025	850	350	405	1675	166	2x L=3700	132	2x L=3700	150	6,2	
6.3.40.*	2475	950	420	455	2125	166	4x L=4600	132	2x L=4600	150	11,6	8,8
6.4.30.*	2475	850	325	405	2125	166	2x L=4600	132	2x L=4600	150	7,8	
6.4.35.*	2475	850	350	455	2125	166	2x L=4600	132	2x L=4600	150	7,8	
6.4.40.*	2850	950	420	480	2550	116	4x L=5500	132	2x L=5500	150	14,0	10,6

Dimensions & Electrical defrost

Goedhart Standard air coolers Cu/Al

Goedhart FC38Lp (G) - coolants

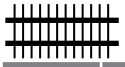 =4 mm

Type	1x230V-50Hz-4 pole (1500 min⁻¹ nom.)																						Air cooler details
	E-Glycol 28% -2 / 3 °C (In/out temp.)			Water 1 / 5 °C (In/out temp.)			P-Glycol 34% -2 / 3 °C (In/out temp.)			Pekasol 50% -2 / 3 °C (In/out temp.)			Freezium 24% -2 / 3 °C (In/out temp.)			Air volume	LpA @ 3 m (+/- 2 dB(A))*	Surface	Connections		Weight	Internal volume	
	Capacity	Volume flow	Pressure drop	Capacity	Volume flow	Pressure drop	Capacity	Volume flow	Pressure drop	Capacity	Volume flow	Pressure drop	Capacity	Volume flow	Pressure drop				I	K		
FC38L	**kW**	**m³/h**	**kPa**	**kW**	**m³/h**	**kPa**	**kW**	**m³/h**	**kPa**	**kW**	**m³/h**	**kPa**	**kW**	**m³/h**	**kPa**	**m³/h**	**dB(A)**	**m²**	**mm**	**mm**	**kg**	**dm³**	
6.1.25.4	1,9	0,36	11,1	2,1	0,45	13,7	1,8	0,33	23,7	2,0	0,34	6,6	1,9	0,38	18,5	510	40,7	9	16	16	15	2	
6.1.30.4	3,1	0,57	22,6	3,8	0,82	46,6	3,0	0,54	47,9	4,6	0,79	54,4	4,6	0,90	65,9	876	42,6	13	16	16	20	3	
6.1.40.4	10,1	1,88	74,4	9,8	2,10	69,1	7,3	1,32	98,5	12,0	2,06	82,3	11,2	2,20	98	2362	53,4	29	22	22	40	6	
6.2.25.4	5,3	0,99	95,0	4,9	1,04	78,2	3,7	0,67	63,1	6,0	1,03	94,8	5,4	1,05	32,4	1020	43,5	18	16	16	25	4	
6.2.30.4	8,7	1,62	90,9	7,9	1,69	75,4	5,4	0,98	53,7	9,8	1,68	91,1	9,1	1,78	44,9	1753	45,4	26	22	22	35	5	
6.2.40.4	21,8	4,06	88,6	20,0	4,27	73,9	12,9	2,34	91,2	24,6	4,22	89,1	23,8	4,66	70,3	4724	56,1	58	35	35	60	12	
6.3.30.4	12,1	2,26	50,8	12,0	2,57	90,1	7,6	1,37	53,8	14,3	2,46	55,8	14,2	2,79	66,4	2629	46,9	39	28	28	45	8	
6.3.40.4	33,4	6,20	91,3	30,1	6,43	74,3	17,7	3,22	83,6	37,1	6,37	89,9	36,2	7,11	79,6	7086	57,5	87	42	42	90	17	
6.4.30.4	17,3	3,21	69,6	16,1	3,44	99	10,1	1,83	87,1	19,5	3,34	70,1	18,8	3,68	82,7	3505	47,9	52	28	28	60	10	

 =7 mm

Type	1x230V-50Hz-4 pole (1500 min⁻¹ nom.)																						Air cooler details
	E-Glycol 28% -2 / 3 °C (In/out temp.)			Water 1 / 5 °C (In/out temp.)			P-Glycol 34% -2 / 3 °C (In/out temp.)			Pekasol 50% -2 / 3 °C (In/out temp.)			Freezium 24% -2 / 3 °C (In/out temp.)			Air volume	LpA @ 3 m (+/- 2 dB(A))*	Surface	Connections		Weight	Internal volume	
	Capacity	Volume flow	Pressure drop	Capacity	Volume flow	Pressure drop	Capacity	Volume flow	Pressure drop	Capacity	Volume flow	Pressure drop	Capacity	Volume flow	Pressure drop				I	K		
FC38L	**kW**	**m³/h**	**kPa**	**kW**	**m³/h**	**kPa**	**kW**	**m³/h**	**kPa**	**kW**	**m³/h**	**kPa**	**kW**	**m³/h**	**kPa**	**m³/h**	**dB(A)**	**m²**	**mm**	**mm**	**kg**	**dm³**	
6.1.25.7	2,1	0,40	9,8	2,1	0,44	87,6	1,8	0,33	93,6	1,7	0,30	5,7	1,7	0,33	12	612	40,8	5	16	16	15	2	
6.1.30.7	2,8	0,51	20,1	3,3	0,70	35,4	2,7	0,48	42,8	3,9	0,67	40,4	3,9	0,76	49,8	1130	43,7	8	16	16	20	3	
6.1.40.7	6,3	1,16	21,5	8,1	1,73	48,7	6,4	1,16	85,9	9,9	1,69	57,3	9,8	1,92	69	2903	54,4	17	22	22	30	6	
6.2.25.7	4,2	0,79	63,7	4,1	0,88	58,1	3,2	0,59	55,6	5,0	0,87	69,9	5,0	0,98	83	1225	43,7	11	16	16	20	4	
6.2.30.7	7,2	1,34	64,1	6,9	1,47	57,8	4,9	0,89	48,2	8,4	1,45	69,3	7,7	1,52	82,3	2261	46,5	16	22	22	30	5	
6.2.40.7	17,2	3,20	57,4	16,8	3,59	82,5	11,4	2,08	80,3	20,2	3,47	62,5	20,1	3,94	74,4	5807	57,1	35	28	28	55	11	
6.3.30.7	11,5	2,15	84,7	10,4	2,23	69,3	7,3	1,33	92	12,9	2,21	84	12,2	2,40	99	3391	48,1	23	28	28	55	8	
6.3.40.7	28,1	5,22	88,8	25,2	5,39	71,8	15,8	2,87	74,2	31,2	5,34	87,2	30,4	5,96	75	8710	58,6	52	35	35	80	17	
6.4.30.7	15,8	2,93	96,3	14,0	2,99	76,1	9,2	1,66	78,5	17,3	2,97	92,8	16,7	3,28	63,4	4521	49,2	31	28	28	55	10	

* = Sound pressure indication (LpA) at 3 m distance each air cooler (+/- 2 dB(A)) , free field conditions, according EN13487

** = The standard tension of the fans is 1x230V, with the exception of the 400 mm fan, 4 poles is only available in 3x400V execution

Goedhart Standard air coolers Cu/Al

Goedhart FC38Lp (G) - coolants

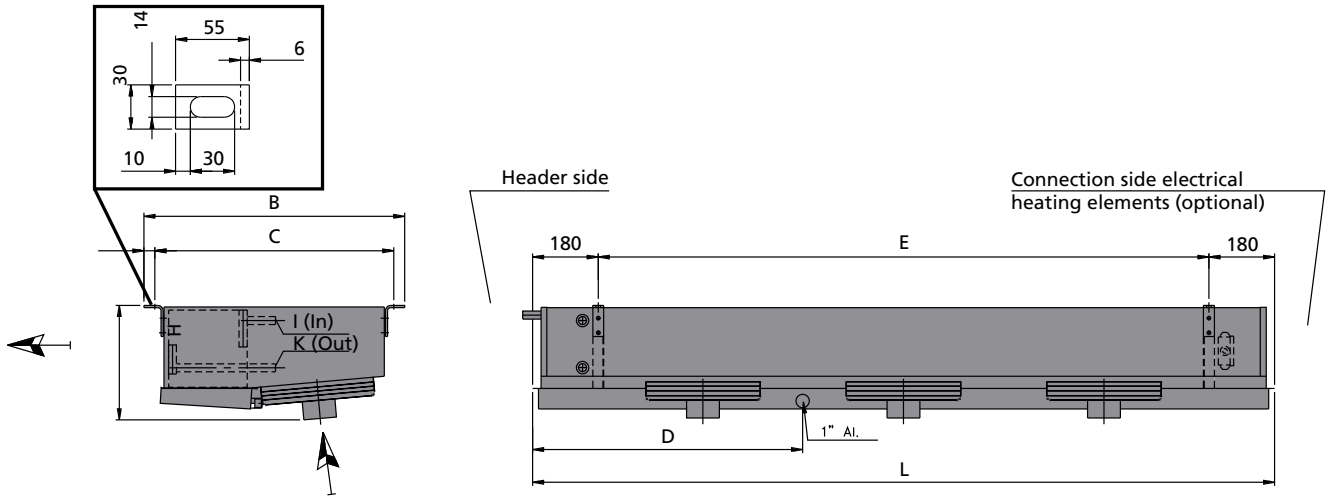

EC-Declarations

According	: Declaration of incorporation (SEP)
Group of fluid	: 2
PS	: 28 bar
TS	: +55 / -40 °C

Type	Dimensions					Electrical defrost at 3x400V-50Hz				
	L	B	H	E	D1	Coil block		Drip tray		Standard
FC38L	mm	mm	mm	mm	mm	number	O [mm]	number	O [mm]	kW
6.1.25.*	890	705	280	530	245	2x L=1300	132	1x L=1300	175	1,5
6.1.30.*	990	705	315	630	295	2x L=1600	132	1x L=1600	175	1,9
6.1.40.*	1190	865	465	830	295	3x L=1900	132	1x L=2200	175	3,2
6.2.25.*	1390	705	280	1030	695	2x L=2500	132	1x L=2500	175	3,1
6.2.30.*	1590	705	315	1230	795	2x L=2800	132	1x L=2800	175	3,5
6.2.40.*	1990	865	465	1630	995	3x L=3700	132	1x L=3700	175	6,2
6.3.30.*	2190	705	315	1830	795	2x L=4000	132	1x L=4000	175	5,0
6.3.40.*	2790	865	465	2430	995	3x L=5200	132	1x L=5200	175	8,8
6.4.30.*	2790	705	315	2430	1395	2x L=5200	132	1x L=5200	175	6,6

Goedhart Standard air coolers Cu/Al

Goedhart FC38Sp (dx) - R404A

=4 mm Type	Fan diameter	1x230V-50Hz-4 pole (1500 min⁻¹ nom.) SC1 DT1 = 10K Air on =10°C 0 / +10	SC2 DT1 = 8K Air on =0°C -8 / 0	SC3 DT1 = 7K Air on =-18°C -25 / -18	Air volume	LpA @ 3 m (+/- 2 dB(A))*	Surface	Connections I	Connections K	Weight	Internal volume
FC38S	mm	kW	kW	kW	m³/h	dB(A)	m²	mm	mm	kg	dm³
4.1.25.4	1x250	1,8	1,2		632	40,8	7	12	12	26	2
4.1.30.4	1x300	2,7	2,4		1204	42,7	11	12	12	34	2
6.1.30.4	1x300	3,8	2,5		1033	42,7	16	12	22	39	4
6.1.35.4	1x350	6,6	4,6		1870	52,5	25	12	22	51	5
6.1.40.4	1x400	9,5	6,5		2632	53,4	34	12	22	63	7
6.1.45.4	1x450	14,9	10,2		4807	54,3	45	12	22	75	9
4.2.30.4	2x300	5,3	4,8		2399	45,5	22	12	22	50	4
6.2.30.4	2x300	8	5,4		2056	45,5	32	12	22	61	7
6.2.35.4	2x350	13,2	9,2		3730	55,3	50	12	22	82	10
6.2.40.4	2x400	19,1	12,9		5249	56,2	68	16	28	103	13
6.2.45.4	2x450	29,8	20,5		9595	57	90	16	28	122	18
6.2.50.4	2x500	36,9	24,6		10969	57,8	112	16	35	204	22
6.3.30.4	3x300	11,9	8,1		3080	47,1	49	12	22	81	10
6.3.35.4	3x350	20,4	13,7		5591	56,8	75	16	28	112	14
6.3.40.4	3x400	27,9	18,5		7868	57,7	102	16	35	142	20
6.3.45.4	3x450	46,6	31,1		14382	58,4	134	16	35	174	26
6.3.50.4	3x500	55,4	37		16440	59,3	168	22	42	291	33
6.4.30.4	4x300	16	10,8		4103	48,2	65	16	28	104	12
6.4.35.4	4x350	27,7	18,6		7450	57,9	99	16	35	143	19
6.4.40.4	4x400	38,7	26		10485	58,7	136	16	35	183	26
6.4.45.4	4x450	62,7	41,8		19169	59,4	179	16	42	222	34
6.4.50.4	4x500	74,7	49,6		21911	60,2	224	22	42	376	43
6.5.45.4	5x450	79,5	52,5		23956	60,1	223	16	42	267	42
6.6.45.4	6x450	94,7	63,1		28744	60,7	268	22	42	322	50

Air cooler details

=7 mm Type	Fan diameter	1x230V-50Hz-4 pole (1500 min⁻¹ nom.) SC1 DT1 = 10K Air on =10°C 0 / +10	SC2 DT1 = 8K Air on =0°C -8 / 0	SC3 DT1 = 7K Air on =-18°C -25 / -18	Air volume	LpA @ 3 m (+/- 2 dB(A))*	Surface	Connections I	Connections K	Weight	Internal volume
FC38S	mm	kW	kW	kW	m³/h	dB(A)	m²	mm	mm	kg	dm³
4.1.25.7	1x250	1,3	0,8	0,6	720	40,8	4	12	12	25	2
4.1.30.7	1x300	2,8	1,9	1,4	1442	42,7	7	12	12	32	2
6.1.30.7	1x300	3,1	2	1,5	1291	42,7	10	12	12	36	4
6.1.35.7	1x350	5,8	3,9	2,8	2216	52,5	15	12	22	46	5
6.1.40.7	1x400	8,1	5,4	3,9	3137	53,4	21	12	22	57	7
6.1.45.7	1x450	10,6	8,4	6,1	5676	54,3	27	12	22	67	9
4.2.30.7	2x300	5,6	3,7	2,7	2875	45,5	13	12	22	47	4
6.2.30.7	2x300	7	4,6	3,4	2573	45,5	19	12	22	56	7
6.2.35.7	2x350	11,5	7,8	5,6	4423	55,3	30	12	22	74	10
6.2.40.7	2x400	16,1	10,8	7,8	6264	56,2	41	16	22	92	13
6.2.45.7	2x450	21,2	16,8	12,1	11336	57	54	16	28	109	18
6.2.50.7	2x500	30,6	20,3	14,6	13252	57,8	67	16	28	186	22
6.3.30.7	3x300	10,5	7,1	5,1	3855	47,1	29	12	22	74	9
6.3.35.7	3x350	17,3	11,6	8,4	6631	56,8	45	16	22	100	14
6.3.40.7	3x400	22,2	15,9	10,9	9391	57,7	61	16	28	126	20
6.3.45.7	3x450	32	25,2	18,1	16998	58,4	80	16	35	152	26
6.3.50.7	3x500	46,2	30,4	21,9	19868	59,3	101	16	35	263	32
6.4.30.7	4x300	14,1	9,5	6,8	5137	48,2	39	12	22	93	12
6.4.35.7	4x350	23,2	15,5	11,2	8837	57,9	60	16	28	127	19
6.4.40.7	4x400	32,4	21,5	15,7	12517	58,7	82	16	35	161	26
6.4.45.7	4x450	42,8	33,7	24,1	22657	59,4	107	16	35	193	34
6.4.50.7	4x500	61,9	40,6	29,2	26482	60,2	134	16	42	339	43
6.5.45.7	5x450	53,6	41,5	30,1	28319	60,1	134	16	42	229	42
6.6.45.7	6x450	64,4	50,8	36,2	33979	60,7	161	16	42	279	50

Air cooler details

* = Sound pressure indication (LpA) at 3 m distance each air cooler (+/- 2 dB(A)) , free field conditions, according EN13487

** = The standard tension of the fans is 1x230V, with the exception of the 400 mm fan, 4 poles is only available in 3x400V execution

Goedhart Standard air coolers Cu/Al

Goedhart FC38Sp (dx) - R404A

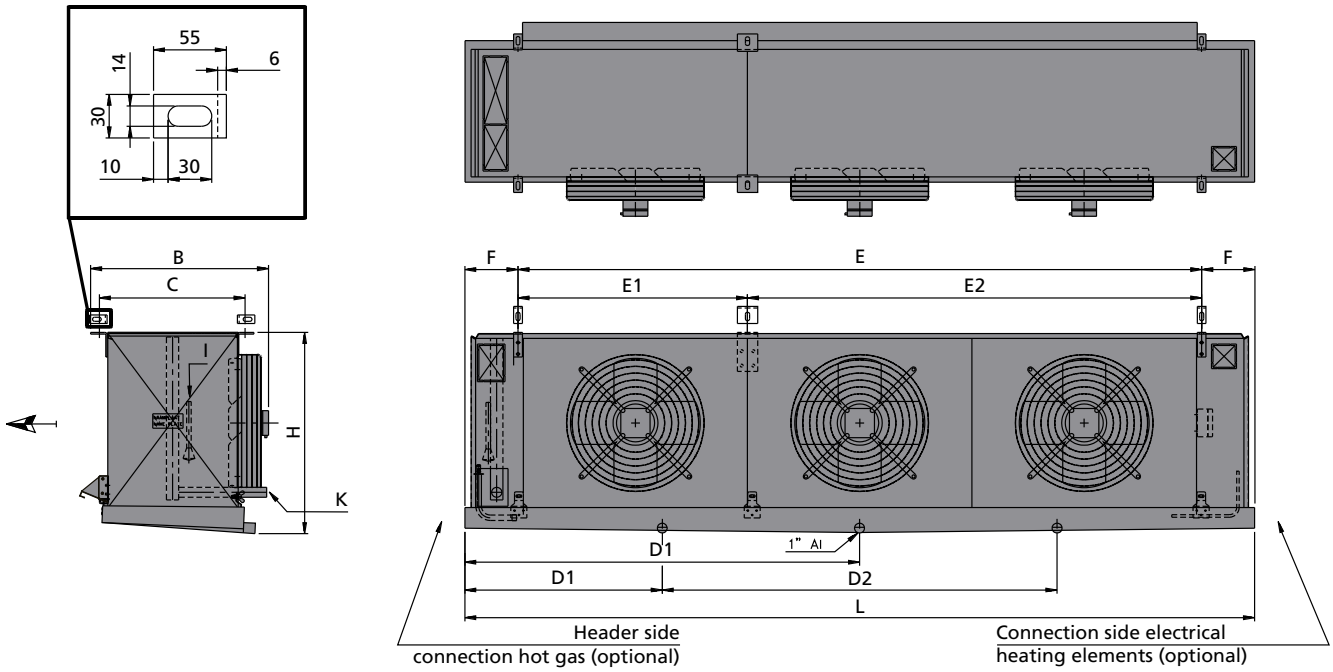

EC-Declarations

Connection ≤ 35 mm	: Declaration of incorporation (SEP)
Connection 42mm and 54 mm	: module A
Group of fluid	: 2
PS	: 28 bar
TS	: +55 / -40 °C

Type	Dimensions										Electrical defrost at 3x400V-50Hz					
	L	B	H	C	E	E1	E2	F	D1	D2	Coil block		Drip tray		Standard	Light
FC38S	mm	mm	mm	mm	mm	mm	mm	mm	mm	mm	number	O [mm]	number	O [mm]	kW	kW**
4.1.25.*	690	510	395	400	406			142	345		2x L=1000	66	1x L=1600	200	1,4	
4.1.30.*	765	510	470	400	481			142	383		2x L=1300	66	1x L=1600	200	1,6	
6.1.30.*	765	510	470	400	481			142	383		2x L=1300	66	1x L=1600	200	1,6	
6.1.35.*	970	640	550	500	606			182	485		3x L=1600	132	1x L=2200	300	2,8	
6.1.40.*	1070	640	625	500	706			182	535		3x L=1900	132	1x L=2500	300	3,3	
6.1.45.*	1170	735	700	500	806			182	585		5x L=1900	132	1x L=2500	300	4,8	3,7
4.2.30.*	1210	510	470	400	926			142	605		2x L=2200	66	1x L=2500	200	2,8	
6.2.30.*	1210	510	470	400	926			142	605		2x L=2200	66	1x L=2500	200	2,8	
6.2.35.*	1540	640	550	500	1176			182	770		3x L=2800	132	1x L=3100	300	4,8	
6.2.40.*	1740	640	625	500	1376			182	870		3x L=3100	132	1x L=3700	300	5,4	
6.2.45.*	1940	735	700	500	1576			182	970		5x L=3700	132	1x L=4000	300	9,4	7,1
6.2.50.*	2040	835	850	600	1576			232	1020		5x L=3700	132	1x L=4300	400	9,6	7,2
6.3.30.*	1655	510	470	400	1371			142	828		2x L=3100	66	1x L=3700	200	4,1	
6.3.35.*	2110	640	550	500	1746			182	1055		3x L=4000	132	1x L=4600	300	6,1	
6.3.40.*	2410	640	625	500	2046			182	1205		3x L=4600	132	1x L=5200	300	8,0	
6.3.45.*	2710	735	700	500	2346			182	1355		5x L=5200	132	1x L=5800	300	13,5	10,2
6.3.50.*	2810	835	850	600	2346			232	1405		5x L=5200	132	2x L=5800	400	13,5	10,2
6.4.30.*	2100	510	470	400	1816			142	1050		2x L=4000	66	1x L=4600	200	5,3	
6.4.35.*	2680	640	550	500	2316			182	1340		3x L=5200	132	1x L=5800	300	9,1	
6.4.40.*	3080	640	625	500	2716			182	770	1540	3x L=5800	132	1x L=6700	300	10,3	
6.4.45.*	3480	735	700	500		1558	1558	182	870	1740	5x L=6700	132	1x L=7300	300	17,6	13,4
6.4.50.*	3580	835	850	600		1558	1558	232	895	1790	5x L=6700	132	1x L=7600	400	17,8	13,5
6.5.45.*	4250	640	700	500		1558	2328	182	1063	2125	10x L=4300	-	2x L=4600	-	22,0	16,6
6.6.45.*	5020	640	700	500		2328	2328	182	1255	2510	10x L=4900	-	2x L=5200	-	25,1	18,9

Dimensions & Electrical defrost

Goedhart Standard air coolers Cu/Al

Goedhart FC38Dp (dx) - R404A

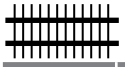 =4 mm

Type	Fan diameter	1x230V-50Hz-4 pole				1x230V-50Hz-6 pole				Surface	Connections		Weight	Internal volume
		SC1	SC2			SC1	SC2							
		DT1 = 10K Air on =10°C 0 / +10	DT1 = 8K Air on =0°C -8 / 0	Air volume	LpA @ 3 m (+/- 2 dB(A))*	DT1 = 10K Air on =10°C 0 / +10	DT1 = 8K Air on =0°C -8 / 0	Air volume	LpA @ 3 m (+/- 2 dB(A))*		I	K		
FC38D	mm	kW	kW	m³/h	dB(A)	kW	kW	m³/h	dB(A)	m²	mm	mm	kg	dm³
6.1.30.4	1x300	3,5	2,3	1005	42,6					16	12	12	35	3
6.1.35.4	1x350	5,8	3,9	1644	52,5					20	12	22	45	4
6.2.30.4	2x300	6,6	4,3	1952	45,4					30	12	22	60	6
6.2.35.4	2x350	10,1	6,7	2956	55,3					34	12	22	78	7
6.2.40.4	2x400	17,3	11,7	4861	56,1	13,2	8,9	3326	48,1	61	16	28	133	12
6.3.30.4	3x300	11,6	7,9	3026	46,9					48	12	22	85	9
6.3.35.4	3x350	14,3	9,6	4187	56,9					48	12	22	116	9
6.3.40.4	3x400	26,2	17,5	7297	57,6	20,1	13,7	4993	49,6	91	16	35	181	17
6.4.30.4	4x300	14,9	10,1	3910	48,0					61	16	28	102	11
6.4.35.4	4x350	18,7	12,5	5402	58,0					61	16	28	139	11
6.4.40.4	4x400	32,0	21,3	9104	58,8	24,7	16,8	6262	50,8	110	16	35	212	20

Air cooler details

 =7 mm

Type	Fan diameter	1x230V-50Hz-4 pole				1x230V-50Hz-6 pole				Surface	Connections		Weight	Internal volume
		SC1	SC2			SC1	SC2							
		DT1 = 10K Air on = 10°C 0 / +10	DT1 = 8K Air on =0°C -8 / 0	Air volume	LpA @ 3 m (+/- 2 dB(A))*	DT1 = 10K Air on = 10°C 0 / +10	DT1 = 8K Air on =0°C -8 / 0	Air volume	LpA @ 3 m (+/- 2 dB(A))*		I	K		
FC38D	mm	kW	kW	m³/h	dB(A)	kW	kW	m³/h	dB(A)	m²	mm	mm	kg	dm³
6.1.30.7	1x300	2,9	1,8	1260	42,6					10	12	12	31	3
6.1.35.7	1x350	4,9	3,2	2015	52,5					12	12	22	39	4
6.2.30.7	2x300	5,4	4,3	2463	45,4					18	12	22	52	6
6.2.35.7	2x350	8,3	5,3	3718	55,3					21	12	22	67	7
6.2.40.7	2x400	14,3	9,5	5924	56,1	11,4	7,8	3976	48,1	36	12	22	119	12
6.3.30.7	3x300	10,2	6,9	3791	46,9					29	12	22	74	9
6.3.35.7	3x350	12,4	8,3	5331	56,9					29	12	22	107	9
6.3.40.7	3x400	22,0	14,6	8889	57,6	17,3	11,7	5967	49,6	55	16	28	154	17
6.4.30.7	4x300	12,8	8,7	4933	48,0					36	12	22	89	11
6.4.35.7	4x350	15,8	10,4	6921	58,0					36	16	22	129	11
6.4.40.7	4x400	27,2	18,1	11311	58,8	21,8	14,7	7630	50,8	66	16	28	188	20

Air cooler details

* = Sound pressure indication (LpA) at 3 m distance each air cooler (+/- 2 dB(A)) , free field conditions, according EN13487
** = The standard tension of the fans is 1x230V, with the exception of the 400 mm fan, 4 poles is only available in 3x400V execution

Goedhart Standard air coolers Cu/Al

Goedhart FC38Dp (dx) - R404A

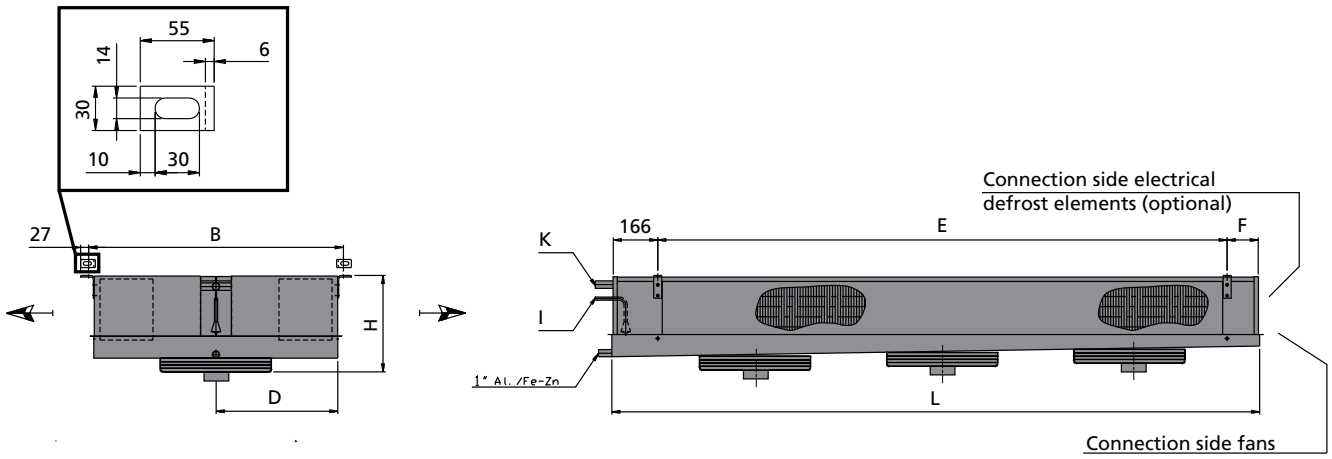

Fans mounted to the outside of the driptray!

EC-Declarations

Connection ≤ 35 mm	: Declaration of incorporation (SEP)
Connection 42mm and 54 mm	: module A
Group of fluid	: 2
PS	: 28 bar
TS	: +55 / -40 °C

Type	Dimensions						Electrical defrost at 3x400V-50Hz					
	L	B	H	D	E	F	Coil block		Drip tray		Standard	Light
FC38D	mm	mm	mm	mm	mm	mm	number	O [mm]	number	O [mm]	kW	kW**
6.1.30.*	925	850	305	405	575	166	2x L=1600	132	2x L=1600	150	2,5	
6.1.35.*	1080	850	330	405	730	166	2x L=1900	132	2x L=1900	150	3,0	
6.2.30.*	1425	850	325	405	1075	166	2x L=2500	132	2x L=2500	150	4,1	
6.2.35.*	1570	850	350	405	1220	166	2x L=2800	132	2x L=2800	150	4,6	
6.2.40.*	1775	950	420	455	1425	166	4x L=3100	132	2x L=3400	150	8	6,1
6.3.30.*	2025	850	325	405	1675	166	2x L=3700	132	2x L=3700	150	6,2	
6.3.35.*	2025	850	350	405	1675	166	2x L=3700	132	2x L=3700	150	6,2	
6.3.40.*	2475	950	420	455	2125	166	4x L=4600	132	2x L=4600	150	11,6	8,8
6.4.30.*	2475	850	325	405	2125	166	2x L=4600	132	2x L=4600	150	7,8	
6.4.35.*	2475	850	350	455	2125	166	2x L=4600	132	2x L=4600	150	7,8	
6.4.40.*	2850	950	420	480	2550	116	4x L=5500	132	2x L=5500	150	14,0	10,6

Goedhart Standard air coolers Cu/Al

Goedhart FC38Lp (dx) - R404A

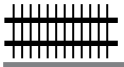 =4 mm

Type	Fan diameter	1x230V-50Hz-4 pole (1500 min⁻¹ nom.)					Surface	Connections		Weight	Internal volume	Air cooler details
		SC1 DT1 = 10K Air on =10°C 0 / +10	SC2 DT1 = 8K Air on =0°C -8 / 0	SC3 DT1 = 7K Air on =-18°C -25 / -18	Air volume	LpA @ 3 m (+/- 2 dB(A))*		I	K			
FC38L	mm	kW	kW	kW	m³/h	dB(A)	m²	mm	mm	kg	dm³	
6.1.25.4	1x250	2,0	1,3		510	40,7	9	12	12	15	2	
6.1.30.4	1x300	2,6	2,2		876	42,6	13	12	12	20	3	
6.1.40.4	1x400	8,4	5,7		2362	53,4	29	12	22	40	6	
6.2.25.4	2x250	4,0	2,6		1020	43,5	18	12	22	25	4	
6.2.30.4	2x300	6,5	4,5		1753	45,4	26	12	22	35	5	
6.2.40.4	2x400	16,9	11,4		4724	56,1	58	12	28	60	11	
6.3.30.4	3x300	10,0	6,7		2629	46,9	39	12	22	45	7	
6.3.40.4	3x400	25,0	16,6		7086	57,5	87	16	28	90	16	
6.4.30.4	4x300	13,3	9,0		3505	47,9	52	16	22	60	10	

 =7 mm

Type	Fan diameter	1x230V-50Hz-4 pole (1500 min⁻¹ nom.)					Surface	Connections		Weight	Internal volume	Air cooler details
		SC1 DT1 = 10K Air on =10°C 0 / +10	SC2 DT1 = 8K Air on =0°C -8 / 0	SC3 DT1 = 7K Air on =-18°C -25 / -18	Air volume	LpA @ 3 m (+/- 2 dB(A))*		I	K			
FC38L	mm	kW	kW	kW	m³/h	dB(A)	m²	mm	mm	kg	dm³	
6.1.25.7	1x250	1,6	1,1	0,8	612	40,8	5	12	12	15	2	
6.1.30.7	1x300	2,9	2,0	1,4	1130	43,7	8	12	12	20	3	
6.1.40.7	1x400	7,0	4,7	3,4	2903	54,4	17	12	22	30	6	
6.2.25.7	2x250	3,3	2,1	1,6	1225	43,7	11	12	12	20	4	
6.2.30.7	2x300	5,9	4,0	2,9	2261	46,5	16	12	22	30	5	
6.2.40.7	2x400	14,4	9,6	7,0	5807	57,1	35	12	22	55	11	
6.3.30.7	3x300	9,0	6,0	4,3	3391	48,1	23	12	22	55	7	
6.3.40.7	3x400	20,3	14,2	10,0	8710	58,6	52	16	28	80	16	
6.4.30.7	4x300	12,0	8,0	5,7	4521	49,2	31	12	22	55	10	

Goedhart Standard air coolers Cu/Al

Goedhart FC38Lp (dx) - R404A

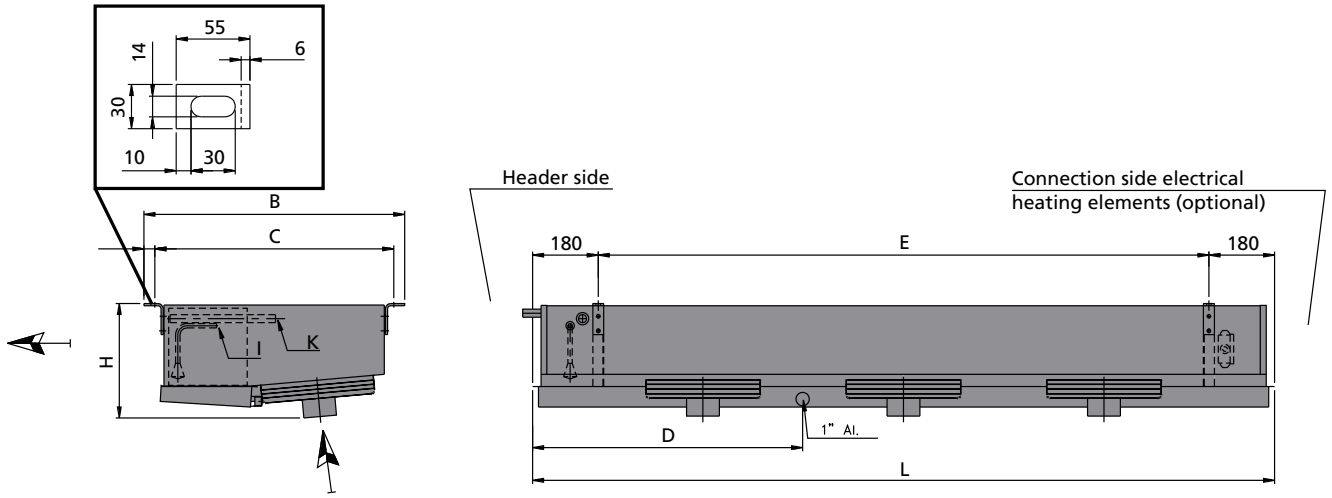

EC-Declarations

Connection ≤ 35 mm	: Declaration of incorporation (SEP)
Connection 42mm and 54 mm	: module A
Group of fluid	: 2
PS	: 28 bar
TS	: +55 / -40 °C

Type	Dimensions					Electrical defrost at 3x400V-50Hz				
	L	B	H	E	D1	Coil block		Drip tray		Standard
FC38L	mm	mm	mm	mm	mm	number	O [mm]	number	O [mm]	kW
6.1.25.*	890	705	280	530	245	2x L=1300	132	1x L=1300	175	1,5
6.1.30.*	990	705	315	630	295	2x L=1600	132	1x L=1600	175	1,9
6.1.40.*	1190	865	465	830	295	3x L=1900	132	1x L=2200	175	3,2
6.2.25.*	1390	705	280	1030	695	2x L=2500	132	1x L=2500	175	3,1
6.2.30.*	1590	705	315	1230	795	2x L=2800	132	1x L=2800	175	3,5
6.2.40.*	1990	865	465	1630	995	3x L=3700	132	1x L=3700	175	6,2
6.3.30.*	2190	705	315	1830	795	2x L=4000	132	1x L=4000	175	5,0
6.3.40.*	2790	865	465	2430	995	3x L=5200	132	1x L=5200	175	8,8
6.4.30.*	2790	705	315	2430	1395	2x L=5200	132	1x L=5200	175	6,6

The most efficient solution for your project

In good hands at Goedhart

Even before you place an order at Goedhart, a complete and professional team is at your disposal, providing you with thorough advice. We use the latest CAD / CAM developments in the field ofparametric engineering. For less complex projects, please consult the electronic selection program GPC. Our goal is to achieve an optimal and cost efficient cooling system for your business. Flexible, easy to use, quality and safety, which are the key targets of our approach.

Flexible
Every industry and therefore every customer has different requirements and has different needs. That is why we do not believe in mass production of fully standardized products. Depending on your program requirements, you can choose from standardized cooling systems available in different sizes (level 1 series), customized cooling systems consisting of standard product modules (level 2) to fully customized solutions produced (level 3). In order to achieve the objectives of our clients, we use the so-called "customized production philosophy. For that Goedhart has a wide range of materials and a highly efficient and flexible production.

The size of your cooling system and your requirements regarding investment costs and efficiency levels, lifespan and environment are leading to the choice of the type of refrigerant. Goedhart supplies air coolers and air cooled condensers suitable for natural (NH_3 and C_{02}) and synthetic refrigerants. Based on your program requirements our sales engineers will provide a customized advice.

User friendly
Not only the fact that Goedhart delivers high-tech products, makes our customers satisfied. Besides quality, service and ease of use is our top priority. Because each heat exchanger is made on behalf of the customer, additional specifications related to wiring and connections can be achieved during the production process.
Subsequently we deliver the air cooler packed or crated on request, taking into account the mode of installation. Your air cooler or condenser is delivered directly ready for installation, which is the service you can expect from Goedhart.

Quality and safety
Both production sites (Sintmaartensdijk and Nymburk) are certified to ISO 9001, ERP2015 and European PED pressure systems. This means that the products of Goedhart meet the strictest safety standards. Intervention of an external inspector by the PED certification no longer needed. This increases the efficiency of the design and manufacturing process and saves the initial cost.
Additionally Goedhart embraces the Japanese Kaizen philosophy that stands for "do it better, make it better, improve even if it goes well. All employees, from management to the cleaning crew are involved and motivated to suggest improvements. Not once a month or a year, but every day. The quality of this awareness increases work morale and has a positive effect on the efficiency It has to do GEA Goedhart evolve from a traditional metal company into a modern and sustainable industry.




380-420V



Goedhart Standard air coolers Cu/Al

Goedhart Systematic customized & Designed to order products











GEA Goedhart air coolers for every application

For Contractors and Original Equipment Manufacturers (OEM) related to the industrial refrigeration industry, GEA Goedhart B.V. offers an unlimited range of air coolers and air cooled condensers in several configurations.

Depending on the application, the optimum configuration will be selected in close cooperation with our customers.



Pressure Equipment Directive (P.E.D)

All aircoolers produced by GEA Goedhart comply with the Pressure Equipment Directive 97/23/EC. PED certificates can be downloaded from www.goedhart.nl.

CHANGING
GEA HEAT EXCHANGERS

GEA Goedhart B.V.

Nijverheidsweg 6, 4695 RC Sint Maartensdijk
The Netherlands
Phone +31 (0)166 665 665, Fax+31 (0)166 663 698
www.brand-change.com/www.goedhart.eu / www.goedhart.nl,
info.goedhart.nl@gea.com

GEA Heat Exchangers s.a. / GEA Goedhart systems

Kostomlátecká 180, 288 26 Nymburk
Czech Republic
Phone +420 325 519 951, Fax+420 325 519 952
www.brand-change.com / www.goedhart.cz,
goedhart.cz@gea.com

© GEA Group AG. All rights reserved
Version: 02.01.2.017.dok - 2015-03. Subject to modification.