CHANGING
GEA HEAT EXCHANGERS

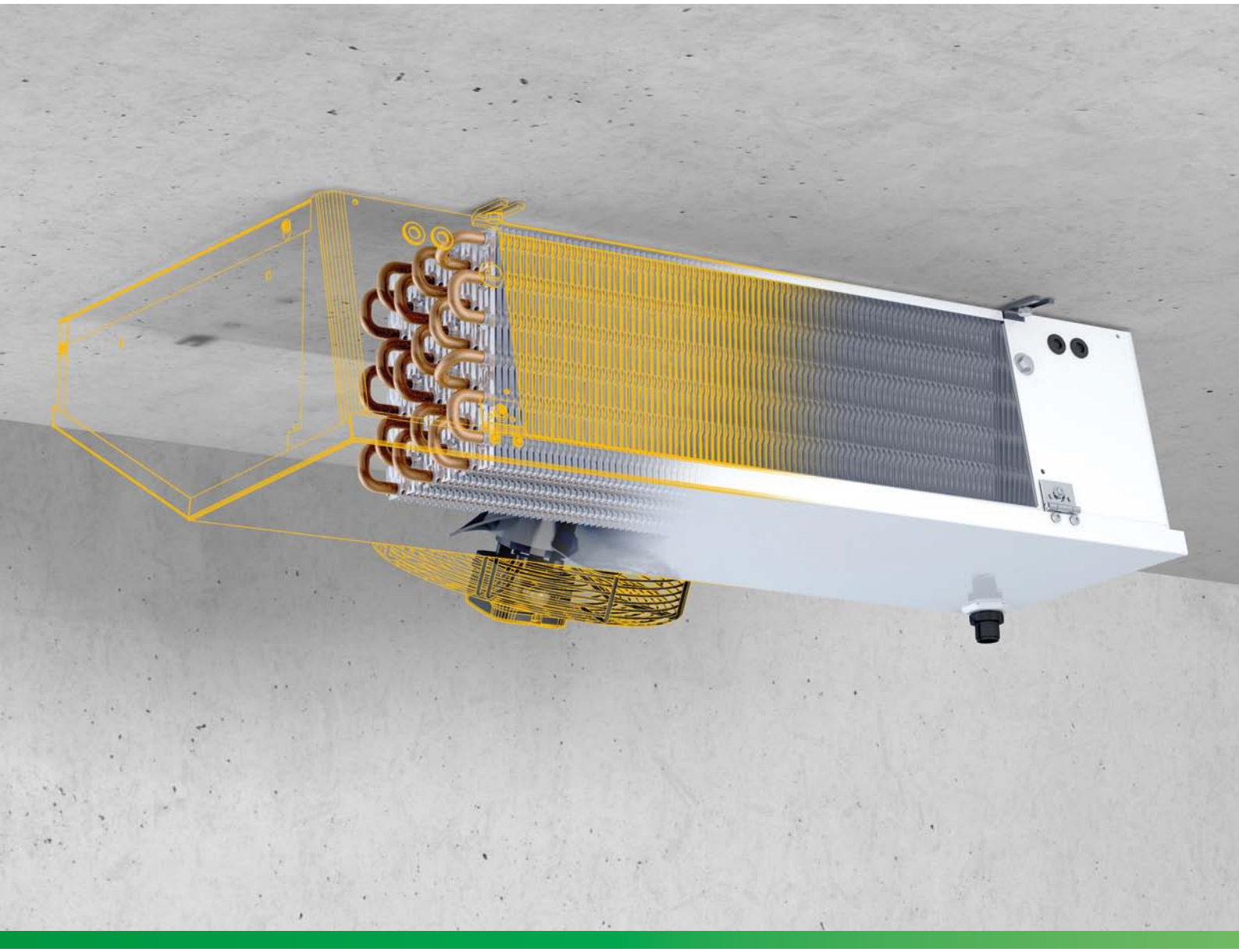

Küba *compact* DF

The space-saving helper in filling stations, gastronomy and the trade

Küba *compact* DF

The space-saving helper in the positive and negative range



Straightforward mounting



Integrated air baffle plate



Extremely space-saving

Type designation code

1	2	3	4	5	6
DF	B	E	07	1	D

1 Model range designation
2 Fin spacing
3 Electric defrost
4 Size
5 Number of fans
6 Generation Code



Capacity range (for SC2)

1.5 kW — 10 kW

Temperature range (t_{L1})

-25°C 0°C +20°C

Number of fans

to

Content

Application benefits for contractors and operators 4

Basic version 6

Technical data – DFA(E) 8

Technical data – DFB(E) 8

Dimensions, weights, electric defrost, drain 9

Variants 10

Accessories 11

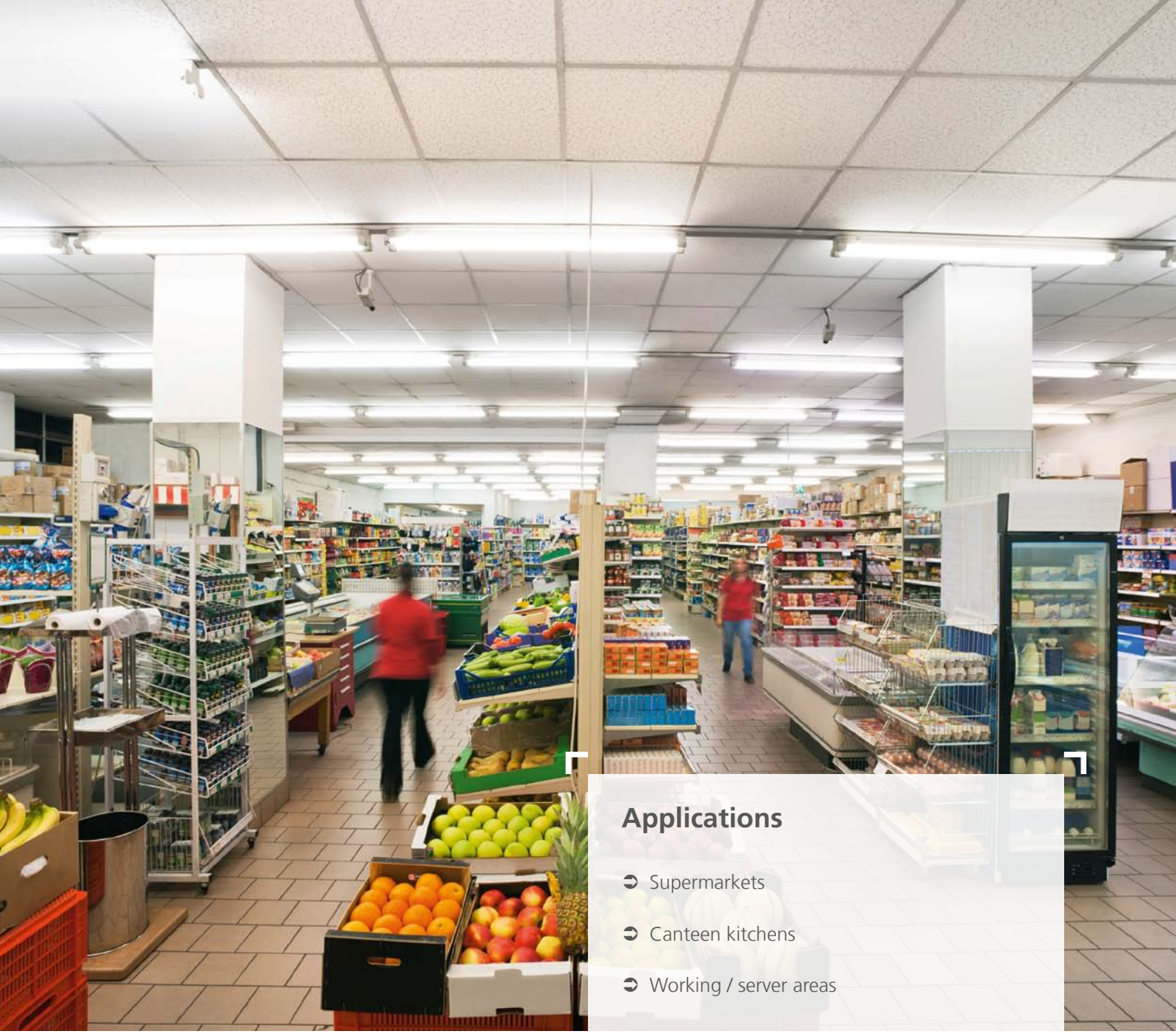

Applications

- Supermarkets
- Canteen kitchens
- Working / server areas

Küba *compact* DF

Application benefits for contractors and operators

Apart from fruit, vegetables and dairy products, packaged deep frozen products have for many years also been standard fare for the retail food trade. It is imperative that the cooling chain and required temperature are maintained uninterrupted in storage.

The size of the store and type of stored goods are decisive in the selection of air coolers. Discounter stores are characterised by high turnover of goods and storage times as short as 1 - 3 days. The frequency at which stores are accessed for removal and storage of goods is correspondingly high.

The cooling power of the evaporator must be dimensioned correspondingly, ensuring that the indoor temperature distribution remains constant.

The Küba *compact* DF (especially for small rooms) is optimal for these applications. The compact evaporator has the necessary cooling power to ensure the uniform distribution of air, thereby ensuring that the room temperature is maintained in all corners of the cold room.

Küba *compact* DF

from the Küba Green Line production range

**Maximum hygiene in the cold room,
optimal protection of the goods**

The Küba *compact* DF air cooler is deployed with an important objective in mind: to keep goods in the cold room fresh in an hygienic environment. The gastronomy cooling specialist *compact* DF therefore ensures that conditions are optimal right from the start – hygiene and protection of produce are writ large: Fast, reliable and simple – with the folding and removable parts of the housing.

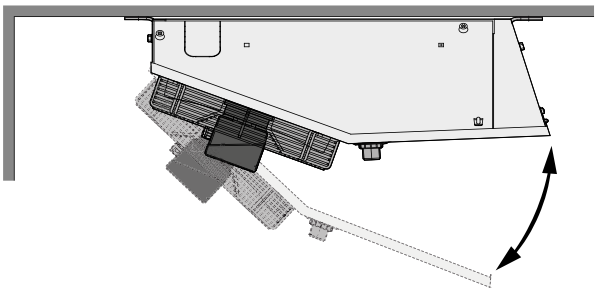

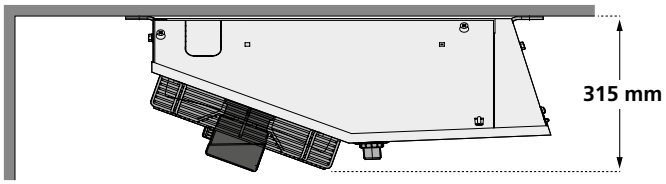

Unsurpassed compactness

Küba *compact* DF air coolers do their name proud. They are compact power packages. The *compact* DF has reliable built-in Küba temperature control in the positive and negative range to ensure reliable cooling performance with optimal utilisation of space.

Best air guidance through built-in air baffle

The integrated air baffle guides the cold air to the ceiling of the cold room and thereby far into the room.
This even distribution of cold air ensures that the stored goods retain their natural appearance and their taste.
Retention of their full value is therefore ensured.

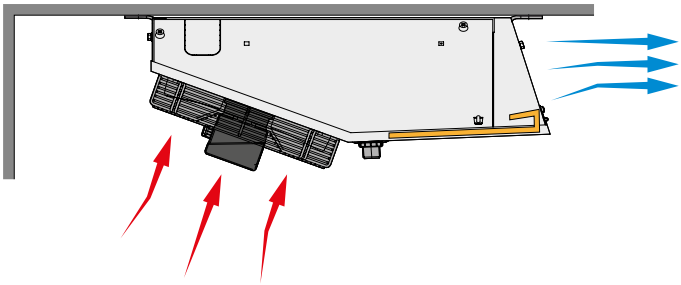

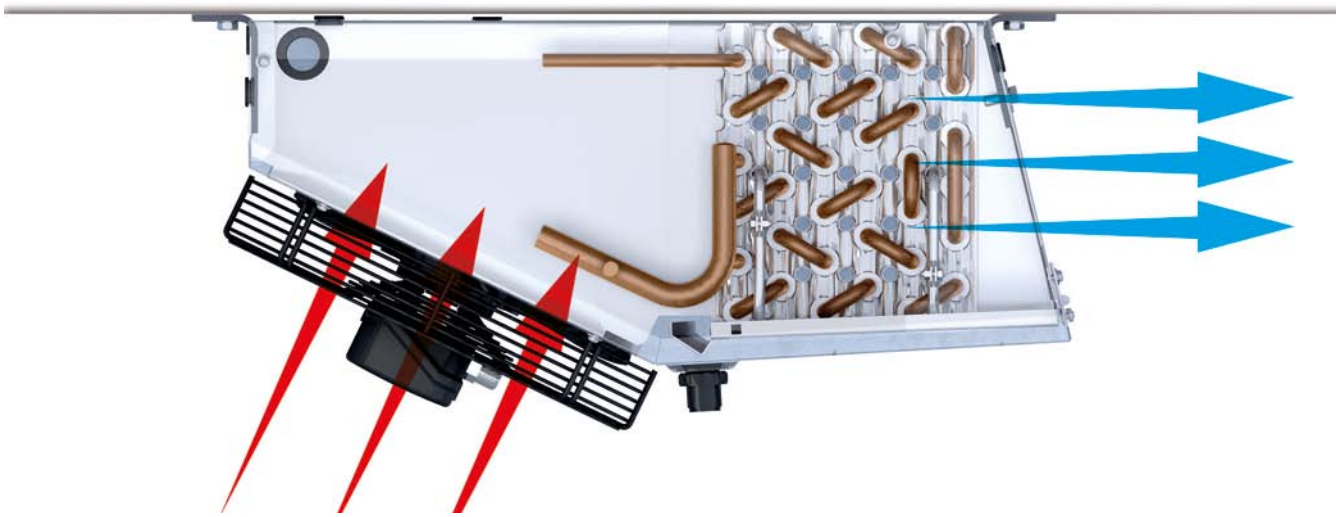

Küba *compact* DF

Basic version



Casing

- Aluminium,
  Sendzimir zinc-plated steel, smooth
- High-grade powder coating
  RAL 9018 papyrus white
- Food-safe
- Easy to clean
- Best quality powder coated edges
- Drip tray can be folded down and unclipped
- Double drip tray
- Compact design



Heat exchanger for direct expansion

- Heat exchanger with staggered tube system consisting of special copper tubes, drawn oxygen-free and inner finned according to DIN EN 12735-1,2 with 12 mm diameter and closed, pure-aluminum HFE fins
- Internal cleanliness according to DIN 8964
- Fin spacing:
  A = 4.5 mm | B = 7 mm
- Fins flared to form-fit the core tube
- Highly effective heat transfer and compact design
- Tubing: Cu-Special
  Fins: Aluminium
  End plates: Aluminium
- DFA: Flow distributor, with multiple injection
- DFB: Küba-CAL® refrigerant distributor with multiple injection



Electric defrost

- Heaters with CrNi steel sleeve
- Vapour-tight connections
- Mains voltage: 230 V-1/400V-3-Y
- Wired ready to connect in junction boxes
- Optimized tubular heater configurations ensure fast and even defrosting
- Fins flared to form-fit the core tube
- Aluminium heat pipes that ensure excellent heat transfer to the fins and thus effective defrosting cycles with optimized service life.



Fans

- Available fan diameter: 300 mm
- Permissible motor ambient temperatures: -30° C bis +60° C
- 230 ±10% V-1~, 50 Hz/60 Hz
- With built-in protector, according to VDE provisions
- Fans are wired to an internal distribution box
- Protection class: IP44
- Insulation class: B
- Operating values are the values of the built-in motor at +20 °C, with an unobstructed air flow and a dry surface
- Controller:

Phase control	☐
Transformer	☑
Delta/star	☐
Frequency converter	☑

Please observe the manufacturer's information!

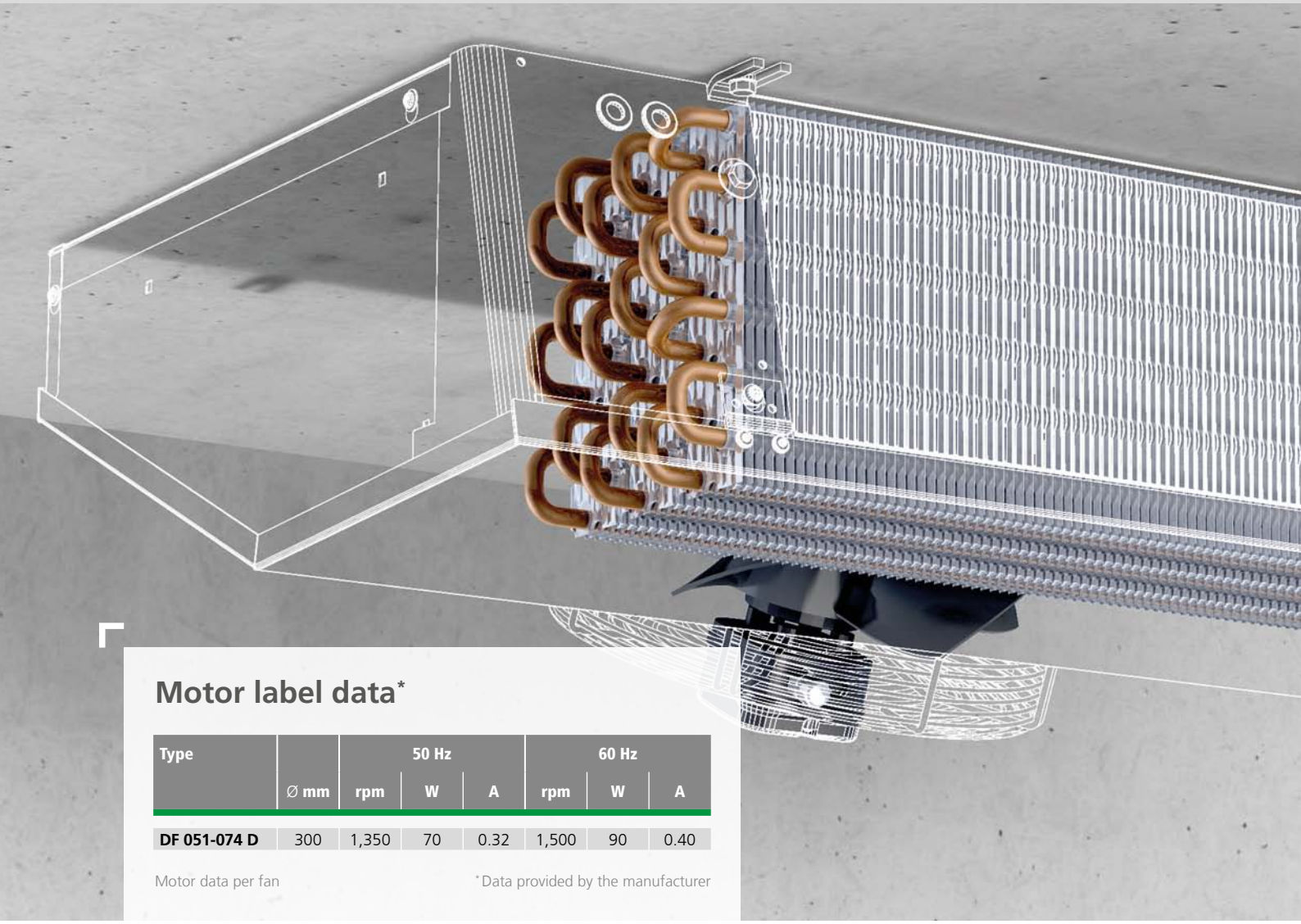

Motor label data*

Type		50 Hz			60 Hz		
	Ø mm	rpm	W	A	rpm	W	A
DF 051-074 D	300	1,350	70	0.32	1,500	90	0.40

Motor data per fan

*Data provided by the manufacturer

Küba *compact* DF

Technical data – DFA (E)

4,5 mm

	Type	Rating Q_0 at 50 Hz. DT1. R404A		Cooling surface	Air flow	Air throw ***	Tube volume	Connections		Sound	Fans (Operational values at 50 Hz)				
		SC1	SC2					Inlet	Outlet	L_{WA}	Blade	Current	Per Fan		
		kW	kW	m^2	m^3/h	m	dm^3	Ø mm	Ø mm	db (A)	Ø mm	230 ± 10% V-1 50 Hz	rpm	W	A
1	**DFA 051 D**	2.6	1.8	6.9	950	9	1.4	10 x1.0*	12 x1.0	68	300	230 V -1	1,350	75	0.35
	DFA 061 D	3.1	2.0	8.3	1,100	11	1.7	10 x1.0*	12 x1.0	68	300	230 V -1	1,350	75	0.35
	DFA 071 D	3.7	2.4	12.3	1,035	11	2.5	10 x1.0*	18 x1.0	68	300	230 V -1	1,350	75	0.35
2	**DFA 052 D**	5.1	3.4	13.8	1,900	11	2.7	10 x1.0*	18 x1.0	71	300	230 V -1	1,350	75	0.35
	DFA 062 D	6.3	4.1	16.6	2,200	13	3.2	12 x1.0**	22 x1.0	71	300	230 V -1	1,350	75	0.35
	DFA 072 D	7.4	4.7	24.7	2,070	13	4.8	12 x1.0**	22 x1.0	71	300	230 V -1	1,350	75	0.35
3	**DFA 063 D**	9.4	5.9	24.9	3,300	15	4.8	12 x1.0**	22 x1.0	73	300	230 V -1	1,350	75	0.35
	DFA 073 D	11.1	7.1	37.0	3,105	15	7.1	12 x1.0**	28 x1.5	73	300	230 V -1	1,350	75	0.35
4	**DFA 064 D**	12.6	8.0	33.2	4,400	18	6.3	12 x1.0**	28 x1.5	74	300	230 V -1	1,350	75	0.35
	DFA 074 D	14.9	9.8	49.4	4,140	18	9.4	15 x1.0**	28 x1.5	74	300	230 V -1	1,350	75	0.35

Subject to modification.

Standard condition	t_{L1}	t_0	DT1
NB1/SC1	+10	0	10
NB2/SC2	0	-8	8

* Single injection
** Multiple injection via flow distributor
*** Throw limit at 0.5 m/s

Operating values are the values of the built-in motor at +20 °C, with an unobstructed air flow and a dry surface

Küba com*pact* DF

Technical data – DFB (E)

7 mm

	Type	Rating Q_0 at 50 Hz. DT1. R404A		Cooling surface	Air flow	Air throw ***	Tube volume	Connections		Sound	Fans (Operational values at 50 Hz)				
		SC2	SC3					Inlet	Outlet	L_{WA}	Blade	Current	Per Fan		
		kW	kW	m^2	m^3/h	m	dm^3	Ø mm	Ø mm	db (A)	Ø mm	230 ± 10% V-1 50 Hz	rpm	W	A
1	**DFB 051 D**	1.5	1.1	4.6	1,070	9	1.4	10 x1.0*	12 x1.0	68	300	230 V -1	1,350	75	0.35
	DFB 061 D	1.8	1.5	5.5	1,300	11	1.7	10 x1.0*	12 x1.0	68	300	230 V -1	1,350	75	0.35
	DFB 071 D	2.1	1.8	8.2	1,130	11	2.5	10 x1.0*	18 x1.0	68	300	230 V -1	1,350	75	0.35
2	**DFB 052 D**	2.9	2.2	9.2	2,140	11	2.7	10 x1.0*	18 x1.0	71	300	230 V -1	1,350	75	0.35
	DFB 062 D	3.5	2.9	11.1	2,600	13	3.2	12 x1.0**	22 x1.0	71	300	230 V -1	1,350	75	0.35
	DFB 072 D	4.1	3.5	16.5	2,260	13	4.8	12 x1.0**	22 x1.0	71	300	230 V -1	1,350	75	0.35
3	**DFB 063 D**	5.1	4.3	16.6	3,900	15	4.8	12 x1.0**	22 x1.0	73	300	230 V -1	1,350	75	0.35
	DFB 073 D	6.2	5.3	24.7	3,390	15	7.1	12 x1.0**	28 x1.5	73	300	230 V -1	1,350	75	0.35
4	**DFB 064 D**	6.9	5.8	22.1	5,200	18	6.3	12 x1.0**	28 x1.5	74	300	230 V -1	1,350	75	0.35
	DFB 074 D	8.5	7.0	33.0	4,520	18	9.4	15 x1.0**	28 x1.5	74	300	230 V -1	1,350	75	0.35

Subject to modification.

Standard condition	t_{L1}	t_0	DT1
NB2/SC2	0	-8	8
NB3/SC3	-18	-25	7

* Single injection
** Multiple injection via Küba-CAL® distributor
*** Throw limit at 0.5 m/s

Operating values are the values of the built-in motor at +20 °C, with an unobstructed air flow and a dry surface

Küba *compact* DF

Dimensions, weights, electric defrost, drain

Type	Dimensions								Electrical defrost 230 V-1 / 400 V-3-Y	Weights (net)		Weights (gross)		Drain	
	H	B	T	L	E_1	E_2	F	W_{min}	Coil	DFA/B	DFA/B E	DFA/B	DFA/B E	D	
	mm	mm	mm	mm	mm	mm	mm	mm	kW	kg	kg	kg	kg	inch	
DF 051D	268	872	626	612	530	-	171	100	1.1	20	20	23	23	G ¾	1
DF 061D	268	972	626	612	630	-	171	100	1.2	23	23	26	26	G ¾	
DF 071D	268	972	626	612	630	-	171	100	1.2	25	25	28	28	G ¾	
DF 052D	268	1,372	626	612	1,030	-	171	100	1.8	32	32	54	54	G ¾	2
DF 062D	268	1,572	626	612	1,230	-	171	100	2.1	37	37	60	60	G ¾	
DF 072D	268	1,572	626	612	1,230	-	171	100	2.1	40	40	63	63	G ¾	
DF 063D	268	2,172	626	612	1,830	629	171	100	3.0	52	52	88	88	G ¾	3
DF 073D	268	2,172	626	612	1,830	629	171	100	3.0	56	56	92	92	G ¾	
DF 064D	268	2,772	626	612	2,430	1,229	171	100	3.9	68	68	108	108	G ¾	4
DF 074D	268	2,772	626	612	2,430	1,229	171	100	3.9	75	75	115	115	G ¾	

Subject to modification.

The dimensions are only valid for the standard model design!
Note the differences in dimension among versions and accessories.

Dimensional drawings for comp*act* DF (1-4 motors)

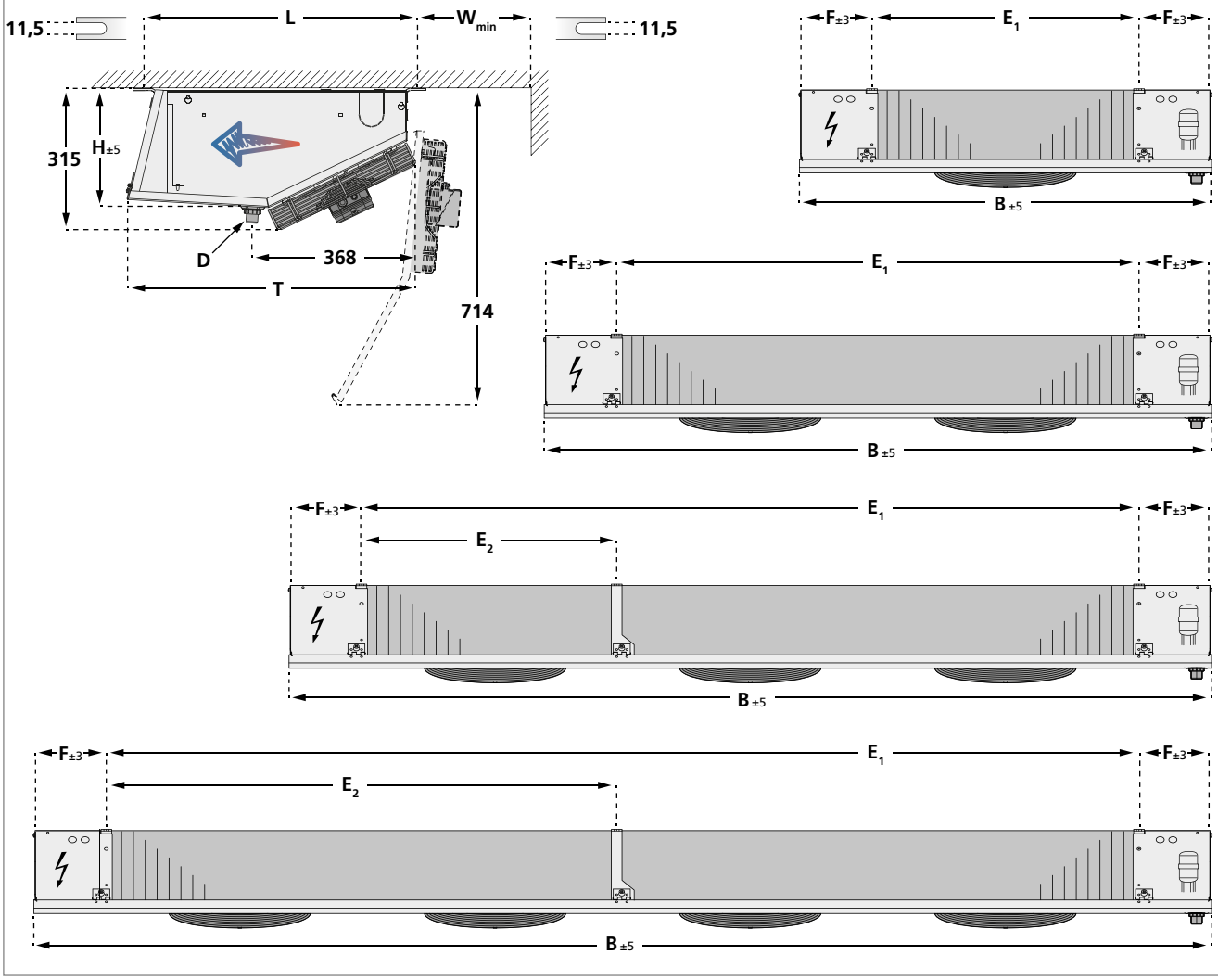

Küba *compact* DF

Variants

Motor-Variants

V 1.33 Fans, silent version
Fans 230V±10% V-1~
50/60 Hz; 1.100 rpm
Reduced air volume flow
Lower sound power level

V 1.50 EC fans with fixed speeds
Fixed fan speed at optimal operating point

V 1.52 EC fan with controllable speed
Fans adjustable

Protection against corrosion

V 6.01 Corrosion protection 1

Tubing:	Copper
Fins:	Aluminum, epoxy-resin-coated
End plates:	Aluminum protective coating
Casing:	Aluminum/zinc coated steel, protective coating on both sides

V 6.04 Corrosion protection 4

Tubing:	Copper
Fins:	Aluminum, epoxy-resin-coated
End plates:	Aluminum
Casing:	Aluminum/zinc coated steel, protective coating on on one side

Construction-variants

V 2.05 Water / brine circulation
With a large number of distributors
(small pressure drop)

V 2.06 Water / brine circulation
With a small number of distributors
(large pressure drop)

CO_2-Variants

V 7.45 CO_2-Direct expansion
up to 45 bar operating pressure

V 7.60 CO_2-Direct expansion
up to 60 bar operating pressure

Electric heater DFHR

For air coolers with forced-draft fans, for assembly on site.
Suitable for air conditioning, or heating, in the winter.
For optimal heat transfer, the heater rods are fitted in
Cu tube sleeves.

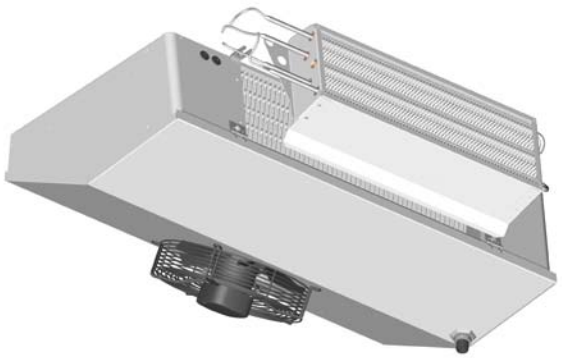

- Fully powder-coated (RAL 9018)
- 230 ± 10% V-1~ or 400 ± 10% V-3~ -Y
- Heater rods with CrNi steel sleeve
- Vapour-tight connections
- Connecting cable 1.0 mm² x 1000 mm
- Casing: steel, continuous hot-dip zinc coated
- Fins: aluminium
- Tube sleeves: Cu

Selection table & dimensions:

For type	Description	Dimensions		Weight	Current	Capacity
		H	L	kg	A	kW
DF 051 D	DFHR 500	210	500	1.4	3.7	0.8
DF 061 D	DFHR 600	210	600	1.7	4.2	1.0
DF 071 D	DFHR 600	210	600	1.7	4.2	1.0
DF 052 D	DFHR 1000	210	1,000	2.4	7.5	1.7
DF 062 D	DFHR 1200	210	1,200	2.9	8.3	1.9
DF 072 D	DFHR 1200	210	1,200	2.9	8.3	1.9
DF 063 D	DFHR 1800	210	1,800	4.2	12.5	2.9
DF 073 D	DFHR 1800	210	1,800	4.2	12.5	2.9
DF 064 D	DFHR 2400	210	2,400	5.6	16.3	3.8
DF 074 D	DFHR 2400	210	2,400	5.6	16.3	3.8

NOTE:

Operate only when the air cooler fans are running, to prevent the cold storage ceiling from overheating. Please observe the corresponding safety guidelines.

www.brand-change.com

GEA Küba GmbH

Kühler Weg 1 · 82065 Baierbrunn · Deutschland
Tel.: ++49(0)89/744 73-0 · Fax: ++49(0)89/744 73-107
kueba@gea.com · www.kueba.de

© Copyright 2015 GEA Küba GmbH · 0094.392BR.DFCD.EN · Status as of 08/2015
Subject to technical changes