CHANGING
GEA HEAT EXCHANGERS

www.brand-change.com




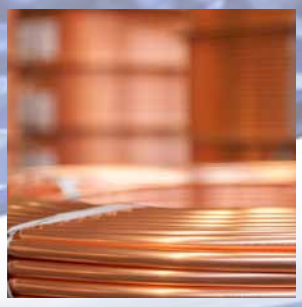







Goedhart systematic customized products

Cu/Al

Freons - CO_2 - Coolants



Index

Welcome at Goedhart	3
3 Level of engineering	4
Cu/Al ranges	6
Goedhart GPC selection program	8
Basic information	9
Goedhart VCI	14
Goedhart VCe	22
Goedhart VNS	28
Goedhart DVS	34
Goedhart BC50/BC50XF	42
Accessoiries / options	48

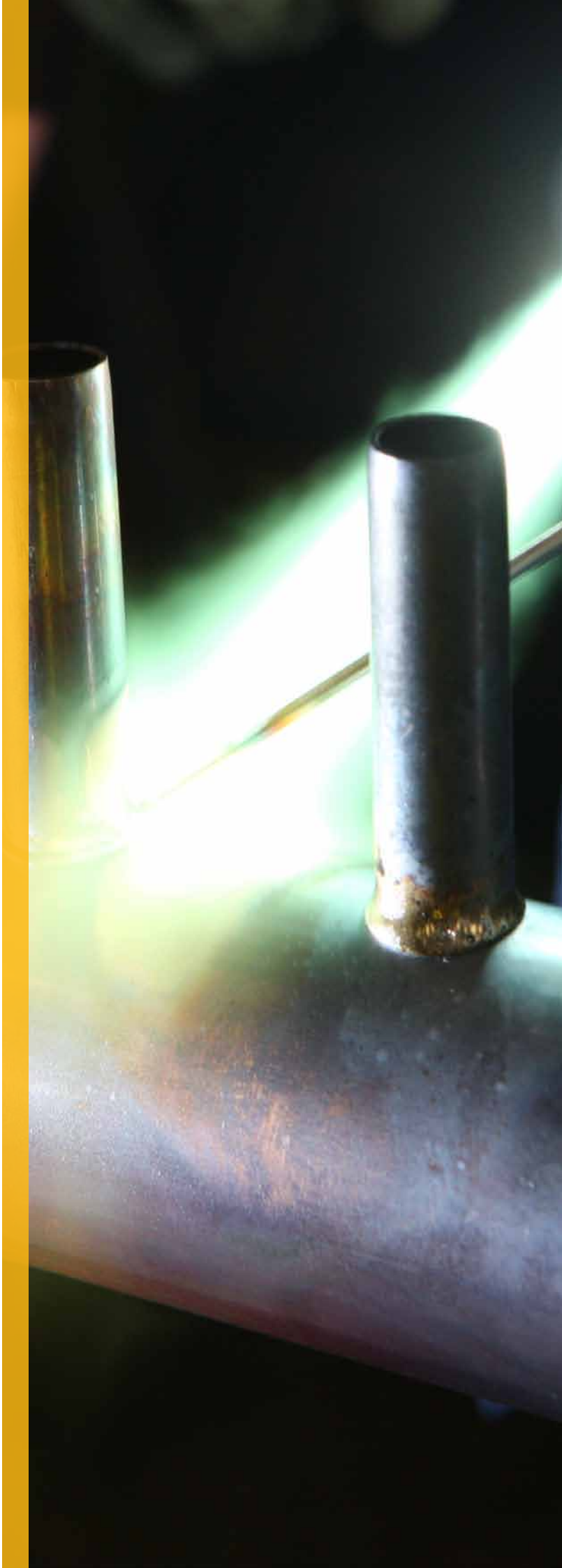

Welcome at Goedhart

Do not settle for compromise, but go for the best cooling solution to suit your situation. That is the philosophy which Goedhart makes himself hard. Since 1935 we develop, produce and deliver worldwide air coolers, air cooled condensers and composite systems for (semi) industrial applications and various markets. Our products are perfect for projects requiring a technically demanding and involving a great deal of flexibility in terms of design, dimensions, accessories and cooling system types and methods is necessary.

To achieve the most optimal and cost efficient cooling system Goedhart uses three 'levels of engineering:

- Level 1 Fully standarized: standard cooling systems available in different sizes
- Level 2 Systematic customized products: custom made cooling systems built from standard modules;
- Level 3 Designed to order products: extensive cooling systems and applications developed especially for the niche market;

Extensive theoretical and practical project analysis by our professional sales engineers will determine which configuration, materials, and level of engineering best fit your program requirements. Additionally, you can use the innovative 'Goedhart Product Catalogue (GPC), the digital design program for all Level 1 and 2 industrial air coolers and air-cooled condensers.

For what level or engineering you choose; Your are with Goedhart in good hands in the field of refrigeration and freezing. This brochure provides information on Cu / Al series, a level 2 Systematic customized product.

Do you have any further questions, we are happy to help you personally. We thank you in advance for the interest you have shown in Goedhart and its products.



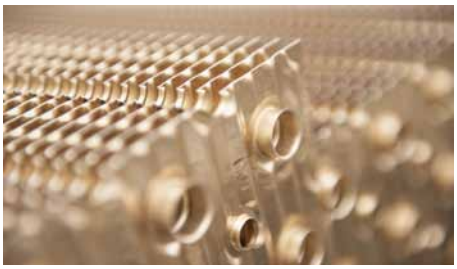

3 Levels of engineering

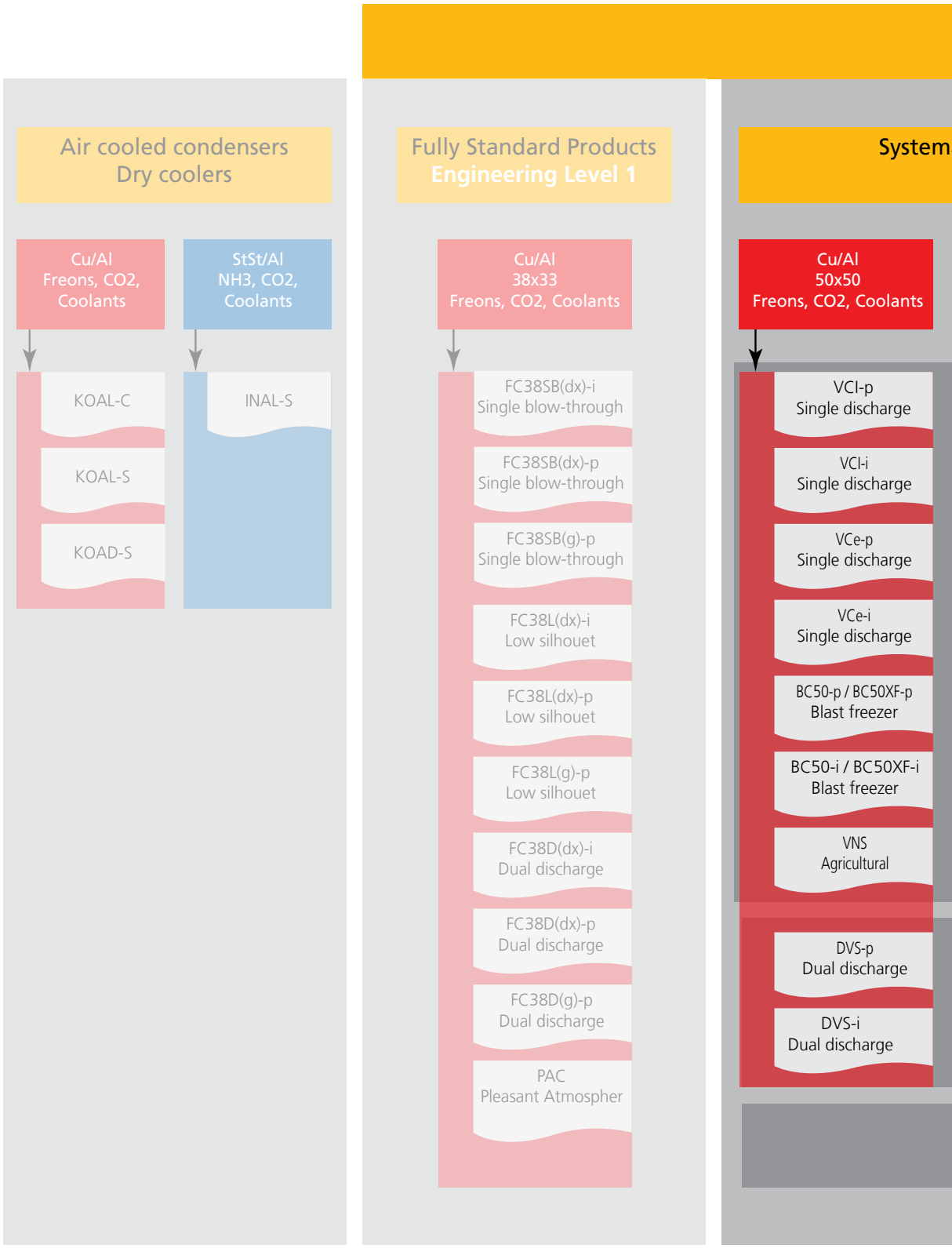

Goedhart´s 3 Levels of engineering

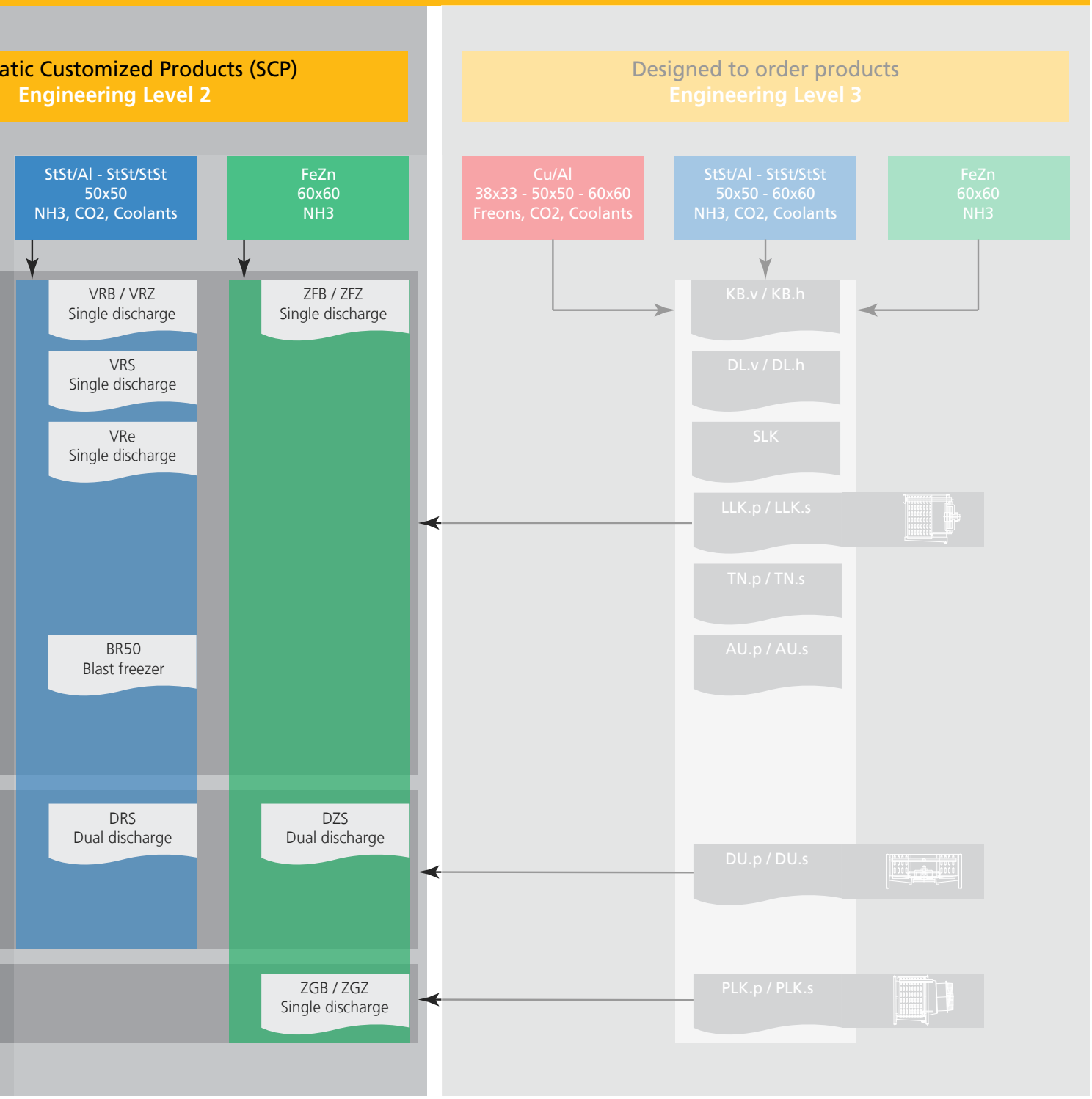

CU / AL Ranges

We can not emphasize often enough that we can meet our “customized production” philosophy to every customer requirements. Common customer requirements lead to innovation of our products. A good example is the energy efficient VCe-p and VCe-i ranges in the copper / aluminum version of our air coolers and air-cooled condensers

Standard flexible
For all Cu / Al models and series of the Goedhart air coolers is that your schedule of requirements leading. Depending on the application, our sales team search for the optimal configuration in close cooperation with the customer. You have a free choise in the so-called level 1 and 2 versions:

- dimensions
- Air direction
- blow-through or draw-through
- model: with feet of suspension profiles
- cooling system: natural (NH_3 and C_{02}) and synthetic refrigerants
- materials: copper tubes/aluminium fins, Stainless steel tubes/aluminium fin, Stainless steel tubes and fins or steel tubes and fins / hot dipped galavanized;
- accessories: eg defrost, coatings.

Parametric design
During the design Goedhart makes use of the latest 3D design software, With this software we design your air cooler parametricaly. It is a method to record relationships between variables of a geometrical model. Changing a value of a variable, the whole model changes with this value while the terms of the relationships are maintained.

By making clever use of the latest trends in this area, Goedhart can reduce the duration of the production process up to six weeks and we can keep the initial costs low. In addition you will receive the scaled CAD models and additional design-related information.

Level 2 of engineering - ‘Systematic customized products’
The custom-made cooling systems built from standard product components are so-called “Level 2 Systematic customized products”. Within this level of engineering, you can choose from air coolers consisting of copper tubes with aluminum fins (Cu / Al 50x50), stainless steel tubes with aluminum fins (St / Al 50x50), stainless steel tubes and fins (St/St / Al 50x50) and hot dipped galvanized steel tubes and fins (FeZn 60x60).

Systematic customized Cu/Al ranges

In the table below You will find an overview of all systematic customized air coolers executed with copper tubes with aluminium fins (Cu/Al).

Type		Tube configuration	Description	Internaly enhanced tube	Cooling system
VCI-p		50x50	Single blow-through / draw-through air cooler for industrial cooling and freezing applications	No	DE, coolant, Pump system, CO2
VCI-i		50x50	Single blow-through / draw-through air cooler for industrial cooling and freezing applications	Yes	DE, coolant, Pump system
VCe-p		50x50	Single blow-through / draw-through air cooler with last generation efficient fans and optimized coil block modules	No	DE, coolant, Pump system, CO2
VCe-i		50x50	Single blow-through / draw-through air cooler with last generation efficient fans and optimized coil block modules	Yes	DE, coolant, Pump system
VNS		50x50	Single blow-through air cooler vfor the cooling of sensitive products by means of moderate air flow and relatively high humidity	No	DE, coolant, Pump system, CO2
DVS-p	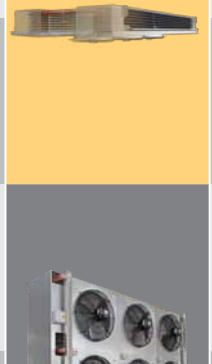	50x50	Dual discharge air cooler for working room applications	No	DE, coolant, Pump system, CO2
DVS-i		50x50	Dual discharge air cooler for working room applications	Yes	DE, coolant, Pump system
BC50 -p BC50XF-p		50x50	Air coolers intended for freezing products. The extra forte (XF) range has reinforced fans for overcoming the air resistance in the room	No	DE, coolant, Pump system, CO2
BC50-i BC50XF-i		50x50	Air coolers intended for freezing products. The extra forte (XF) range has reinforced fans for overcoming the air resistance in the room	Yes	DE, coolant, Pump system



Goedhart SCP air coolers Cu/Al

The best of both worlds

One question which always is in the mind of an industrial refrigeration engineer is the following:
Do I ask for standard of shall I go for tailor made?

There are good reasons for both choices.
In some cases, the solution needed goes beyond the boundaries of the standard program. In other occasions, tailor made can even offer a more economical solution. In other situations standard (systematic customized) would be the logical choice to go for.

In any of the cases GEA Goedhart can off er you the right solution. With the standard selection software Goedhart GPC, finding the right heat exchanger is just a few mouse clicks away. For other occasions the GEA Goedhart engineers are happy to help you out.

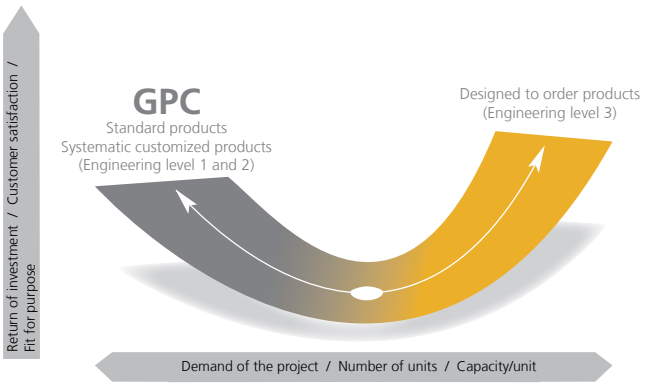

Goedhart GPC Program, your selection software for air coolers and condensers

The Goedhart GPC selection program provides an electronic catalogue covering the majority of product ranges offered by GEA Goedhart.
On **www.goedhart.eu** will find the free download button at the latest, up-to-date version of the GPC Goedhart.

The Goedhart GPC selection program is an easy to use selection tool for contractors, consultants and every other thinkable user and gives you access to many advantages such as:

- Multilangual
- Pre-select buttons to application
- Spare parts
- Selections including drawings
- An extensive list of accessories
- Accurate capacities: During your selection a sophisticated capacity calculation program optimizes the circuits to the design conditions
- Selections possible on several criteria such as capacity, price, fan variations like noise and speed etc.

Capacity

The listed nominal cooling capacities are are based on R404A, DT1 condition -8/0 (SC2), RH of 85% and 4 pole 3 phase fans connected in Δ for the air cooler ranges VCI, VCe, VNS and DVS. For the BC50 range the listed nominal cooling capacities are are based on R404A, DT1 condition -25/-18 (SC3), RH of 85% and 4 pole 3 phase fans connected in Δ. Other cooling conditions (refrigerant, coolant, another DT1, DTM, etc.) can be selected with the GEA Goedhart GPC program.

Influence of Coating on Capacity
The use of coated fins, or of a fully coated coil will result in a capacity decrease of approximately 3%

Capacity optimisation
Since Goedhart tries to limit stock products, we are capable of optimising the circuitry of our evaporators. In order to do this, the following information is needed :

- Design capacity
- Air volume
- Refrigerant
- Air on temperature
- Evaporating temperature
- Liquid temperature before expansion valve.

Capacity on DT1

The capacities are based on R-404A direct expansion, DT1 and a RH of 85 %. DT1 is the difference between air-on temperature and the evaporation temperature of the cooler. The evaporation temperature is the saturate temperature corresponding to the pressure at the suction outlet of the cooler. The nominal capacities are based on refrigeration temperature of -8°C and DT1 = 8K for the air cooler ranges VCI, VCe, VNS and DVS, for BC50 the nominal capacities in this brochure are based on refrigeration temperature of -25°C and DT1 = 7K.

Correction factors for various evaporation temperatures and temperature differences (DT1) are as indicated in the tables beside. The requested capacity must be multiplied by a correction factor from the table. so that a cooler with the resulting nominal capacity can be chosen from the selection tables.

Q nominal = faktor x Q requested

Capacities for other refrigerants, coolants and conditions can be calculated with the Goedhart GPC selection program.

DT1	SC2-DT1 =8K-Air-on=0°C (-8/0)									
	Evaporation temperature (°C)									
K	-3	-4	-5	-6	-7	-8	-9	-10	-11	-12
6	1,32	1,34	1,39	1,43	1,46	1,46	1,47	1,47	1,48	1,49
7	1,05	1,08	1,12	1,15	1,18	1,19	1,19	1,20	1,20	1,21
8	0,86	0,88	0,91	0,94	0,97	1,00	1,00	1,01	1,01	1,02
9	0,76	0,76	0,78	0,80	0,82	0,86	0,86	0,87	0,87	0,88
10	0,66	0,67	0,69	0,71	0,73	0,74	0,74	0,75	0,75	0,76
11	0,58	0,59	0,59	0,60	0,62	0,64	0,64	0,65	0,66	0,67
12	0,55	0,54	0,54	0,54	0,55	0,55	0,56	0,57	0,58	0,59

DT1	SC3-DT1 =7K-Air-on=-18°C (-25/-18)									
	Evaporation temperature (°C)									
K	-21	-22	-23	-24	-25	-26	-27	-28	-29	-30
6	1,20	1,20	1,21	1,21	1,22	1,22	1,23	1,23	1,24	1,24
7	0,99	0,99	0,99	1,00	1,00	1,00	1,01	1,01	1,02	1,02
8	0,83	0,84	0,84	0,84	0,85	0,85	0,85	0,85	0,86	0,86
9	0,72	0,72	0,72	0,73	0,73	0,73	0,73	0,74	0,74	0,74
10	0,63	0,63	0,63	0,64	0,64	0,64	0,64	0,65	0,65	0,65
11	0,56	0,56	0,56	0,57	0,57	0,57	0,50	0,58	0,58	0,58
12	0,50	0,51	0,51	0,51	0,51	0,51	0,52	0,52	0,52	0,52

Fans

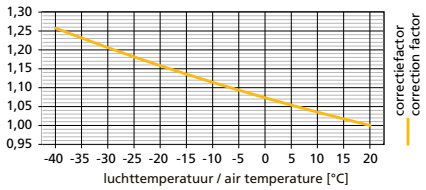

Because of the flexible construction of the Goedhart air cooler, in principle it is possible to deliver with different fans. GEA Goedhart selected a standard fan range of Ziehl Abegg (we reserve the right to alter the manufacturer) which fit perfectly on the Goedhart SCP air coolers. The fans can be supplied in both blow-through and draw-through executions. Against an extra price and with extra delivery times stainless steel guards and EC-fans are available.

Execution

The fans meet the ErP2015 directive. The fans have very good aerodynamic features because of the special impeller geometry.This special impeller geometry gives the fan a low noise level and an high efficiency.

1x230V fans are suitable for a room temperature till -25°C. 3x400V fans are suitable for a room temperature till -40°C. When lower room temperatures are desired, special fans are required.

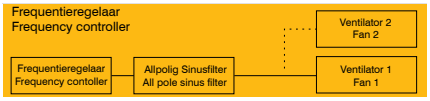

Tension	: 3x400V-50Hz-3 phase : 1x230V-50Hz-1 phase On request 60Hz is possible in 400V - 460V
Protection class	: IP44 / IP54
Color	: RAL9005 (zwart)
Speed controlling:	: - 3 phase AC-motors are suitable for 2-speed regulation by D-Y reconnection at 3x400/690V-50Hz - 3 phase AC-motors are suitable for frequency controller with all-pole sinus filter - 3 phase EC-motors are available with 0-10V or Modbus - 1 phase AC-motors are suitable for phase control and transformator.



The motors are standard executed with a thermo contact (TB) and must be connected to prevent motor damages. The maximum allowable working data in the table and on the name plate of the fans are to operate in an air temperature of +20 °C (air density of ρ = 1,2 kg/m³). For air temperatures lower then +20 °C, the current amperage can be calculated by using the diagram multiplication factor, suitable thermal overloads can then be selected. In our Goedhart GPC selection program also the values in the working point are indicated.

Sound data

The mean sound pressure (LpA @ 3m ± 2 dB (A)) each air cooler is a calculated indication value according to the EN13487 standard parallel pipe. Goedhart uses the fan manufacturer's sound power level (LwA) at the inlet side of the fan. Changes to or by the fan or the product, affect the sound, in these cases, consult the manufacturer for the new indication value. In critical sound requirements, we advise you to consult an expert.

ZAPLus fans

The Goedhart VCE 800 mm fans are fitted as ZAplus fans. The ZAplus is a bionic axial fan in a compact housing made of strong composite material, which integrates the motor and control, and on which a protection guard can be mounted. The special design of the fan wing ensures high efficiency and low noise. If desired, also other Cu / Al Systematic customized air coolers can be delivered with this special fan. Ask your Goedhart contact for the possibilities and applicability.



ZAplus fan optional

Goedhart SCP air coolers Cu/Al

Basic information

Fan diameter	Tension	Three phase - 50Hz								Three phase - 60Hz			
		Δ			Y			Δ	Y	Δ			
		Speed	Nominal power	FLC	Speed	Nominal power	FLC	Sound power indication each fan LwA (+/-2dB(A))		Speed	Nominal power	FLC	Sound power indication each fan LwA (+/-2dB(A))
mm	V	min-1	Watt	A	min-1	Watt	A	dB(A)	dB(A)	min-1	Watt	A	dB(A)
4 poles (n=1500 min-1 nom.)													
350	3x400/690	1390	190	0,40	1170	140	0,23	74	69	1630	300	0,46	**
400	3x400/690	1370	230	0,44	1110	170	0,27	76	70,5	1580	370	0,56	**
450	3x400/690	1350	540	1,10	1020	360	0,66	78	70	1560	880	1,40	**
500	3x400/690	1340	840	1,45	940	540	0,96	81	75	1480	1200	2,00	**
560	3x400/690	1280	1050	2,20	920	580	1,10	85	76	1430	1550	2,70	**
630	3x400/690	1360	1500	2,70	1100	1100	1,80	88	83	1640	2900	4,60	**
630XF*	3x230/400				1455	2200	4,80	**	94				
6 poles (n=1000 min-1 nom.)													
450	3x400/690	900	180	0.50	630	100	0.24	67	61	1020	280	0,60	**
500	3x400/690	880	290	0.74	590	150	0.36	72	64	970	440	0,90	**
560	3x400/690	870	340	0.70	630	210	0.38	73	65	980	540	0,88	**
630	3x400/690	900	620	1,25	720	440	0,72	73	67	1040	1000	1,55	**
710	3x400/690	900	940	1,70	690	620	1,05	76	68	1070	1550	2,80	**
800	3x400/690	815	1700	3,50	600	920	1,70	80	-	910	2500	4,20	**

Fan diameter	Tension	Single phase - 50 Hz				Single phase - 60 Hz			
		Speed	Nominal power	FLC	Sound power indication each fan LwA (+/-2dB(A))	Speed	Nominal power	FLC	Sound power indication each fan LwA (+/-2dB(A))
mm	V	min-1	Watt	A	dB(A)	min-1	Watt	A	dB(A)
4 poles (n=1500 min-1 nom.)									
350	1x230	1390	150	0,65	75	1520	230	1,00	**
450	1x230	1390	600	2,90	80	1430	820	3,50	**
500	1x230	1240	720	3,20	81,5	1260	1000	4,40	**
6 poles (n=1000 min-1 nom.)									
400	1x230	950	130	0,60	68	1110	170	0,78	**
500	1x230	900	270	1,25	71,5	900	380	1,75	**

* Special fan for BC50XF

** Ask your Goedhart contact for the sound power indication

The most efficient solution for your project

In good hands at Goedhart

Even before you place an order at Goedhart, a complete and professional team is at your disposal, providing you with thorough advice. We use the latest CAD / CAM developments in the field ofparametric engineering. For less complex projects, please consult the electronic selection program GPC. Our goal is to achieve an optimal and cost efficient cooling system for your business. Flexible, easy to use, quality and safety, which are the key targets of our approach.

Flexible
Every industry and therefore every customer has different requirements and has different needs. That is why we do not believe in mass production of fully standardized products. Depending on your program requirements, you can choose from standardized cooling systems available in different sizes (level 1 series), customized cooling systems consisting of standard product modules (level 2) to fully customized solutions produced (level 3). In order to achieve the objectives of our clients, we use the so-called "customized production philosophy. For that Goedhart has a wide range of materials and a highly efficient and flexible production.

The size of your cooling system and your requirements regarding investment costs and efficiency levels, lifespan and environment are leading to the choice of the type of refrigerant. Goedhart supplies air coolers and air cooled condensers suitable for natural (NH_3 and C_02) and synthetic refrigerants. Based on your program requirements our sales engineers will provide a customized advice.

User friendly
Not only the fact that Goedhart delivers high-tech products, makes our customers satisfied. Besides quality, service and ease of use is our top priority. Because each heat exchanger is made on behalf of the customer, additional specifications related to wiring and connections can be achieved during the production process.
Subsequently we deliver the air cooler packed or crated on request, taking into account the mode of installation. Your air cooler or condenser is delivered directly ready for installation, which is the service you can expect from Goedhart.

Quality and safety
Both production sites (Sintmaartensdijk and Nymburk) are certified to ISO 9001, ERP2015 and European PED pressure systems. This means that the products of Goedhart meet the strictest safety standards. Intervention of an external inspector by the PED certification no longer needed. This increases the efficiency of the design and manufacturing process and saves the initial cost.
Additionally Goedhart embraces the Japanese Kaizen philosophy that stands for "do it better, make it better, improve even if it goes well. All employees, from management to the cleaning crew are involved and motivated to suggest improvements. Not once a month or a year, but every day. The quality of this awareness increases work morale and has a positive effect on the efficiency It has to do GEA Goedhart evolve from a traditional metal company into a modern and sustainable industry.




380-420V





Goedhart VCI air coolers

Cooling and freezing

The extensive range Goedhart VCI single discharge ceiling mounted industrial air coolers are suitable industrial cooling and freezing applications. The possible air direction is blow-through or draw-through (please specify when ordering).



Coil block

Tube distance : 50x50 mm straight
Fin spacing : 4, 6, 7, 8, 10 and 12mm
Material : 15mm o.d internaly plain (p) or enhanced (i) copper tubes
: aluminium HT-fins

Goedhart VCI coil blocks have copper tubes mechanically expanded into fully collared aluminium fins. A good thermal contact is achieved by expansion of the tubes into the fin collars, that are also utilised as spacers to provide a constant distance between the fins. All coolers are pressure tested to 30 bar (lower by cooling mediums) and are supplied with a light over pressure charge of dried air. Suitable for all known refrigerants and coolants, with the exception of NH3.



Casing

- Construction for ceiling mounting
- Casing material of galvanized sheet steel
- Standard white epoxy spray finishing (RAL 9003)
- Bend/header protection by end covers, easy removed for maintenance
- Standard refrigerant connections are positioned on the left hand side of the unit when looking with the direction of the airflow.
- Cleanable execution optional
- Possible defrost by hot gas spiral or electric defrost elements will be fixed to the bottom side of the coil.
- Stainless steel fasteners

Goedhart VCI features

- For cooling and freezing applications
- Blow-through or draw-through execution possible
- Available with internally plain or enhanced copper tubes
- Consisting of 1500 models
- Capacity range from 2,5 to 265,0kW.
- EC fan technology possible
- Fans not standard wired to a junction box (optional)
- Suitable for most refrigerants / coolants with exception of NH_3
- Goedhart VCI is delivered on a wooden frame for easy mounting
- Many options and accessories available (see p. 48)

Goedhart SCP air coolers Cu/Al

Goedhart VCI -p en VCI-i

Goedhart VCI - Air coolers



1	2	3	4			
VCI	B	p	6	3	45	7
				5	6	7

1. Range : VCI
2. Air direction : B=blow Z=draw
3. Tube execution : p = internally plain
   i = internally enhanced
4. Number of rows deep : 3, 4 ,6, 8, 10
5. Number of fans : 1 - 8
6. Fan diameter : 400, 450, 560, 630 mm
7. Fin spacing : 4, 6, 7, 8, 10, 12 mm

Goedhart VCI - Fan information

Fan diameter	Tension	Δ			Y			Δ	Y	Δ			
		Speed	Nominal power	FLC	Speed	Nominal power	FLC	Sound power indication each fan LwA (+/-2dB(A))		Speed	Nominal power	FLC	Sound power indication each fan LwA (+/-2dB(A))
mm	V	min-1	Watt	A	min-1	Watt	A	dB(A)	dB(A)	min-1	Watt	A	dB(A)
Three phase - 50Hz										**Three phase - 60Hz**			
400	3x400/690	1370	230	0,44	1110	170	0,27	76	70,5	1580	370	0,56	**
450	3x400/690	1350	540	1,10	1020	360	0,66	78	70	1560	880	1,40	**
560	3x400/690	1280	1050	2,20	920	580	1,10	85	76	1430	1550	2,70	**
630	3x400/690	1360	1500	2,70	1100	1100	1,80	88	83	1640	2900	4,60	**
450	3x400/690	900	180	0.50	630	100	0.24	67	61	1020	280	0,60	**
560	3x400/690	870	340	0.70	630	210	0.38	73	65	980	540	0,88	**
630	3x400/690	900	620	1,25	720	440	0,72	73	67	1040	1000	1,55	**
Single phase - 50Hz										**Single phase - 60Hz**			
450	1x230	1390	600	2,90				80		1430	820	3,50	**
400	1x230	950	130	0.60				68		1110	170	0,78	**

** Ask your Goedhart contact for the sound power indication

Goedhart VCI -p

Capacities

Type VCI-p	4 mm			6 mm			7 mm			8 mm			10 mm			12 mm			LpA @ 3 m (+/- 2 dB(A))
	DT1 = 8K (SCI) air on= 0°C (-8/0)	Air volume	Surface	DT1 = 8K (SCI) air on= 0°C (-8/0)	Air volume	Surface	DT1 = 8K (SCI) air on= 0°C (-8/0)	Air volume	Surface	DT1 = 8K (SCI) air on= 0°C (-8/0)	Air volume	Surface	DT1 = 8K (SCI) air on= 0°C (-8/0)	Air volume	Surface	DT1 = 8K (SCI) air on= 0°C (-8/0)	Air volume	Surface	
	kW	m³/h	m²	kW	m³/h	m²	kW	m³/h	m²	kW	m³/h	m²	kW	m³/h	m²	kW	m³/h	m²	dB(A)
3.1.40.							3,2	3505	17										53,4
4.1.40.	4	2985	38	2,5	3323	26	2,3	3415	22										53,4
6.1.40.	6,4	2687	57	5,5	3105	39	5	3234	34	4,6	3330	30	3,9	3455	24				53,4
8.1.40.				6,5	2913	52	6,3	3065	45	5,9	3183	39	5,4	3346	32	5,1	3448	27	53,4
1.1.40.										6,6	3047	49	6,2	3239	40	6	3363	34	53,4
3.1.45.							3,6	6360	23										53,2
4.1.45.	8,4	5272	52	6,8	5945	35	6,1	6148	31										53,2
6.1.45.	10,1	4723	78	8,6	5503	53	7,8	5758	46	7,8	5957	41	7,1	6238	33				53,2
8.1.45.				10,4	5138	71	10	5425	61	9,5	5656	54	8,6	5993	44	8,2	6221	37	53,2
1.1.45.										10,5	5389	68	9,9	5769	55	9,7	6032	47	53,2
3.1.56.							8	10419	42										59,9
4.1.56.	14,8	9151	95	11,2	9974	65	9,9	10197	56										59,9
6.1.56.	17,4	8392	143	15,7	9447	97	14,8	9760	84	13,8	9988	74	12,3	10293	60				59,9
8.1.56.				15,5	8973	129	14,1	9350	112	12,8	9637	99	10,7	10029	81	14,2	10274	68	59,9
1.1.56.										17,5	9304	124	17,1	9770	101	16,6	10072	85	59,9
3.1.63.							12,1	14399	57										63,7
4.1.63.	20,9	13104	130	16,6	13934	88	15,2	14163	76										63,7
6.1.63.	25,6	12318	195	22,1	13403	132	20,5	13717	115	19	13949	101	17	14263	82				63,7
8.1.63.				26,1	12922	176	24,4	13305	153	22,8	13593	135	20,2	13989	110	18,9	14244	93	63,7
1.1.63.										26,4	13259	169	24,2	13728	137	23,1	14034	116	63,7
3.2.40.							6,4	7005	33										56,1
4.2.40.	8	5958	76	5	6638	51	8	6824	45										56,1
6.2.40.	12,7	5362	114	11,3	6200	77	10,6	6459	67	10	6651	59	8,9	6903	48				56,1
8.2.40.				13	5814	103	12,5	6119	89	11,9	6355	79	10,7	6684	64	10,2	6888	54	56,1
1.2.40.										13,2	6082	98	12,3	6468	80	12	6720	68	56,1
3.2.45.							9,8	12712	46										55,9
4.2.45.	16,9	10525	104	13,5	11875	71	12,6	12282	61										55,9
6.2.45.	20,1	9426	156	17,1	10987	106	15,6	11503	91	15,6	11902	81	14,2	12464	66				55,9
8.2.45.				20,8	10256	141	19,9	10833	122	18,9	11294	108	17,2	11973	88	16,4	12429	74	55,9
1.2.45.										21	10761	135	19,8	11521	110	19,3	12052	93	55,9
3.2.56.							16	20831	84										62,5
4.2.56.	29,6	18284	190	22,4	19936	129	19,6	20384	112										62,5
6.2.56.	34,7	16761	285	31,8	18878	194	29,6	19505	168	27,7	19966	148	24,5	20577	121				62,5
8.2.56.				30,9	17925	258	28,1	18683	223	25,5	19258	197	29,6	20046	161	28,3	20541	136	62,5
1.2.56.										36,6	18591	247	34,2	19527	201	33,1	20133	170	62,5
3.2.63.							24,5	28790	114										66,2
4.2.63.	42,6	26192	259	33,9	27856	176	30,8	28315	152										66,2
6.2.63.	52,4	24615	389	44,6	26792	264	40,9	27421	228	38,2	27886	202	33,9	28518	164				66,2
8.2.63.				52,1	25826	352	48,7	26595	305	45,6	27172	269	40,3	27968	219	37,8	28480	186	66,2
1.2.63.										51,4	26503	336	46	27444	274	43,5	28057	232	66,2
3.3.45.							15,3	19062	69										57,4
4.3.45.	25,6	15778	155	20,2	17806	106	18,2	18416	91										57,4
6.3.45.	30,8	14129	233	26,7	16472	158	24,7	17245	137	23,7	17846	121	21,4	18691	99				57,4
8.3.45.				31	15374	211	29,7	16240	183	28,4	16935	161	26,1	17952	131	25	18639	112	57,4
1.3.45.										32	16133	202	29,9	17273	164	28,9	18070	139	57,4
3.3.56.							26,8	31244	126										63,9
4.3.56.	31,2	27417	285	20,1	29899	194	33,7	30571	167										63,9
6.3.56.	54,9	25132	427	48,2	28309	290	44,8	29252	251	41,8	29943	222	36,8	30860	181				63,9
8.3.56.				56,1	26879	387	52,9	28015	335	49,9	28879	296	44,8	30063	241	42,4	30807	204	63,9
1.3.56.										56,2	27878	370	52,2	29284	301	50,2	30194	255	63,9
3.3.63.							36,5	43182	171										67,6
4.3.63.	63,4	39279	388	47,2	41780	264	41,5	42469	228										67,6
6.3.63.	79,8	36910	583	66,1	40179	396	61,8	41125	342	57,8	41824	302	51,2	42772	246				67,6
8.3.63.				78,6	38731	528	74,2	39885	457	70	40751	403	62,8	41946	328	59,4	42716	279	67,6
1.3.63.										79,5	39747	504	72,4	41159	411	69,1	42081	348	67,6

* =Sound pressure indication (LpA) at 3 m distance each air cooler (+/- 2 dB(A)), free field conditions, according EN13487

Goedhart SCP air coolers Cu/Al

Goedhart VCI -p

Capiaities

Type VCI-p	4 mm			6 mm			7 mm			8 mm			10 mm			12 mm			LpA @ 3 m (+/- 2 dB(A))
	DT1 = 8K (SCI) air on= 0°C (-8/0)	Air volume	Surface	DT1 = 8K (SCI) air on= 0°C (-8/0)	Air volume	Surface	DT1 = 8K (SCI) air on= 0°C (-8/0)	Air volume	Surface	DT1 = 8K (SCI) air on= 0°C (-8/0)	Air volume	Surface	DT1 = 8K (SCI) air on= 0°C (-8/0)	Air volume	Surface	DT1 = 8K (SCI) air on= 0°C (-8/0)	Air volume	Surface	
	kW	m³/h	m²	kW	m³/h	m²	kW	m³/h	m²	kW	m³/h	m²	kW	m³/h	m²	kW	m³/h	m²	dB(A)
3.4.45.							19,7	25414	91										59,4
4.4.45.	34,3	21031	207	27,1	23737	141	25,7	24552	122										58,4
6.4.45.	40,7	18832	311	36,3	21957	211	34	22989	183	31,9	23789	161	28,7	24917	131				58,4
8.4.45.				41,9	20493	282	39,8	21647	244	37,8	22574	215	34,4	23931	175	32,7	24848	149	58,4
1.4.45.										42,5	21504	269	39,9	23025	219	38,6	24090	186	58,4
3.4.56.							35,9	41655	167										64,8
4.4.56.	59,8	36550	380	44,8	39862	258	39,2	40758	223										64,8
6.4.56.	69,4	33501	569	64,6	37741	387	60	38997	335	55,9	39920	296	49,2	41144	241				64,8
8.4.56.				61,7	35831	516	56	37349	446	50,9	38500	394	60	40080	321	57,5	41073	272	64,8
1.4.56.										74,4	37166	493	69,4	39041	401	67	40255	340	64,8
3.4.63.							49,6	57573	228										68,5
4.4.63.	86,2	52367	518	68,7	55702	352	62,2	56623	304										68,5
6.4.63.	106,5	49208	776	90,1	53568	527	82,8	54830	456	77,4	55762	403	68,5	57026	328				68,5
8.4.63.				105,1	51636	703	97,8	53174	608	91,2	54330	537	80,5	55925	438	75,5	56950	371	68,5
1.4.63.										102,6	52990	672	91,8	54874	547	91,2	56103	464	68,5
3.5.45.							25,9	31764	114										59,1
4.5.45.	39,9	26284	259	35,3	29667	176	32,3	30687	152										59,1
6.5.45.	51,8	23535	388	45,6	27442	264	42,4	28733	228	39,6	29733	202	35,7	31143	164				59,1
8.5.45.				52,2	25610	352	49,4	27054	304	47,2	28213	269	43,6	29911	219	41,9	31057	186	59,1
1.5.45.										53,3	26876	336	50	28778	274	48,5	30109	232	59,1
3.5.63.							62,1	71965	285										69,1
4.5.63.	56,1	65455	647	86,1	69626	439	77,9	70776	380										69,1
6.5.63.	133,5	61504	970	112,9	66956	659	103,5	68534	570	96,6	69700	504	85,9	71281	410				69,1
8.5.63.				131,6	64540	879	123,9	66464	760	117,1	67911	671	105,5	69903	547	99,9	71186	464	69,1
1.5.63.										133,3	66233	839	121,6	68589	684	116	70128	580	69,1
3.6.45.							29,6	38115	137										59,6
4.6.45.	51,8	31537	311	40,8	35598	211	36,5	36821	183										59,6
6.6.45.	60,7	28238	466	51,1	32926	316	50,9	34476	274	48	35677	242	43,3	37370	197				59,6
8.6.45.				62,9	30729	422	60,2	32462	365	57,4	33852	322	52,6	35891	263	50,2	37266	223	59,6
1.6.45.										64,4	32247	403	59,9	34531	328	57,9	36128	278	59,6
3.6.63.							73,4	86356	342										69,6
4.6.63.	107	78544	776	69,6	83549	527	55,9	84929	456										69,6
6.6.63.	161	73800	1164	132,8	80344	791	124,8	82239	684	116,6	83639	604	103,2	85536	492				69,6
8.6.63.				158,7	77445	1055	149,6	79753	912	141	81489	806	126,4	83883	656	119,4	85422	557	69,6
1.6.63.										160	79476	1007	145,4	82304	820	139,1	84152	696	69,6
3.7.45.							36,3	44466	160										60,1
4.7.45.	60,5	36790	362	49,6	41528	246	45,1	42956	213										60,1
6.7.45.	73,1	32941	543	63,4	38411	369	58,7	40219	319	54,5	41620	282	50,8	44281	246				60,1
8.7.45.				72	35847	492	67,8	37869	426	63,9	39492	376							60,1
1.7.45.										75,1	37619	470							60,1
3.7.63.							85	100749	399										70,2
4.7.63.	152,4	91635	906	118,8	97474	615	108,6	99085	532										70,2
6.7.63.	187,2	86101	1358	157,1	93735	923	146	95945	798	136,1	97578	705	120,1	99792	574				70,2
8.7.63.				185,7	90353	1230	174,6	93046	1064	164,3	95071	940	147	97864	766	138,6	99659	650	70,2
1.7.63.										186,2	92723	1175	169,6	96022	957	162,8	98178	812	70,2
3.8.45.							41,6	50818	182										60,4
4.8.45.	69,3	42044	414	56,5	47460	281	52	49091	243										60,4
6.8.45.	82,5	37644	621	73,4	43896	422	68,6	45962	365	64,3	47565	322	57,2	49823	263				60,4
8.8.45.				84,5	40965	562	80,3	43277	487	76,1	45131	430							60,4
1.8.45.										85,8	42991	537							60,4

* =Sound pressure indication (LpA) at 3 m distance each air cooler (+/- 2 dB(A)), free field conditions, according EN13487

Goedhart SCP air coolers Cu/Al

Goedhart VCI -i

Capacities

Type VCI-i	4 mm			6 mm			7 mm			8 mm			10 mm			12 mm			LpA @ 3 m (+/- 2 dB(A))
	DT1 = 8K (SCI) air on= 0°C (-8/0)	Air volume	Surface	DT1 = 8K (SCI) air on= 0°C (-8/0)	Air volume	Surface	DT1 = 8K (SCI) air on= 0°C (-8/0)	Air volume	Surface	DT1 = 8K (SCI) air on= 0°C (-8/0)	Air volume	Surface	DT1 = 8K (SCI) air on= 0°C (-8/0)	Air volume	Surface	DT1 = 8K (SCI) air on= 0°C (-8/0)	Air volume	Surface	
	kW	m³/h	m²	kW	m³/h	m²	kW	m³/h	m²	kW	m³/h	m²	kW	m³/h	m²	kW	m³/h	m²	dB(A)
3.1.40.	6,1	3166	29	4,6	3438	19	4,1	3505	17										53,3
4.1.40.	7	2985	38	5,6	3323	26	5,1	3415	22	4,7	3479	20							53,3
6.1.40.	8	2687	57	7,1	3105	39	6,6	3234	34	6,2	3330	30	5,4	3455	24	5,1	3527	20	53,3
8.1.40.							7,6	3065	45	7,2	3183	39	6,5	3346	32	6,2	3448	27	53,3
3.1.45.	9,6	5623	39	7,3	6199	27	6,4	6360	23										53,2
4.1.45.	11,2	5272	52	8,9	5945	35	8,2	6148	31	7,5	6297	27							53,2
6.1.45.	13,1	4723	78	11,4	5503	53	10,6	5758	46	10	5957	41	8,9	6238	33	8,3	6418	28	53,2
8.1.45.							12,4	5425	61	11,7	5656	54	10,6	5993	44	10,1	6221	37	53,2
3.1.56.	16,9	9596	71	12,6	10251	49	11,3	10419	42										59,8
4.1.56.	19,8	9151	95	15,3	9974	65	13,7	10197	56	12,5	10354	49							59,8
6.1.56.	23,3	8392	143	20,2	9447	97	18,6	9760	84	17,3	9988	74	15,1	10293	60	14,2	10477	51	59,8
8.1.56.							21,4	9350	112	20,3	9637	99	18,4	10029	81	17,5	10274	68	59,8
3.1.63.	23,2	13553	97	17,5	14219	66	15,6	14399	57										63,6
4.1.63.	28	13104	130	21,7	13934	88	19,5	14163	76	17,7	14329	67							63,6
6.1.63.	33,7	12318	195	28,2	13403	132	25,8	13717	115	23,9	13949	101	21	14263	82	19,6	14462	70	63,6
8.1.63.							30,4	13305	153	28,3	13593	135	25,2	13989	110	24	14244	93	63,6
3.2.40.	12	6323	57	9,2	6869	39	8,2	7005	33										56,1
4.2.40.	14,1	5958	76	11,3	6638	51	10,2	6824	45	9,4	6952	39							56,1
6.2.40.	16	5362	114	14,3	6200	77	13,3	6459	67	12,3	6651	59	10,9	6903	48	10,3	7051	41	56,1
8.2.40.							15,2	6119	89	14,4	6355	79	12,9	6684	64	12,4	6888	54	56,1
3.2.45.	19,1	11230	78	14,5	12385	53	12,9	12712	46										55,9
4.2.45.	22,4	10525	104	17,9	11875	71	16,3	12282	61	15	12583	54							55,9
6.2.45.	26	9426	156	22,9	10987	106	21,3	11503	91	19,9	11902	81	17,7	12464	66	16,6	12827	56	55,9
8.2.45.							24,7	10833	122	23,4	11294	108	21,2	11973	88	20,1	12429	74	55,9
3.2.56.	33,7	19178	143	25,2	20493	97	22,6	20831	84										62,4
4.2.56.	39,5	18284	190	30,5	19936	129	27,4	20384	112	25	20701	99							62,4
6.2.56.	46,5	16761	285	40,3	18878	194	37,2	19505	168	34,5	19966	148	30,2	20577	121	28,4	20949	102	62,4
8.2.56.							42,8	18683	223	40,6	19258	197	36,8	20046	161	35	20541	136	62,4
3.2.63.	46,9	27093	194	34,9	28430	132	31,1	28790	114										66,2
4.2.63.	55,9	26192	259	43,4	27856	176	38,9	28315	152	35,4	28649	134							66,2
6.2.63.	67,2	24615	389	56,3	26792	264	51,5	27421	228	47,8	27886	202	41,9	28518	164	39,1	28918	139	66,2
8.2.63.							60,6	26595	305	56,5	27172	269	50,4	27968	219	47,9	28480	186	66,2
3.3.45.	28,7	16837	117	21,7	18571	79	19,3	19062	69										57,4
4.3.45.	33,6	15778	155	26,5	17806	106	24,1	18416	91	22,3	18869	81							57,4
6.3.45.	39	14129	233	34	16472	158	31,8	17245	137	29,8	17846	121	26,5	18691	99	25	19237	84	57,4
8.3.45.							37,1	16240	183	35,2	16935	161	32	17952	131	30,5	18639	112	57,4
3.3.56.	50,8	28760	214	37,9	30735	145	33,9	31244	126										63,8
4.3.56.	58,8	27417	285	46,9	29899	194	42,4	30571	167	38,7	31046	148							63,8
6.3.56.	70,3	25132	427	60,4	28309	290	55,8	29252	251	51,8	29943	222	45,3	30860	181	42,3	31418	153	63,8
8.3.56.							65,3	28015	335	61,4	28879	296	54,8	30063	241	51,8	30807	204	63,8
3.3.63.	70,4	40632	291	52,4	42640	198	46,3	43182	171										67,6
4.3.63.	82,5	39279	388	64,1	41780	264	58,1	42469	228	53,1	42970	202							67,6
6.3.63.	101,3	36910	583	83,7	40179	396	77,3	41125	342	71,7	41824	302	62,8	42772	246	58,6	43374	209	67,6
8.3.63.							91,7	39885	457	86	40751	403	76,5	41946	328	72,3	42716	279	67,6

* =Sound pressure indication (LpA) at 3 m distance each air cooler (+/- 2 dB(A)), free field conditions, according EN13487

Goedhart SCP air coolers Cu/Al

Goedhart VCI -i

Capacities

Type VCI-i	4 mm			6 mm			7 mm			8 mm			10 mm			12 mm			LpA @ 3 m (+/- 2 dB(A))
	DT1 = 8K (SC) air on= 0°C (-8/0)	Air volume	Surface	DT1 = 8K (SC) air on= 0°C (-8/0)	Air volume	Surface	DT1 = 8K (SC) air on= 0°C (-8/0)	Air volume	Surface	DT1 = 8K (SC) air on= 0°C (-8/0)	Air volume	Surface	DT1 = 8K (SC) air on= 0°C (-8/0)	Air volume	Surface	DT1 = 8K (SC) air on= 0°C (-8/0)	Air volume	Surface	
	kW	m³/h	m²	kW	m³/h	m²	kW	m³/h	m²	kW	m³/h	m²	kW	m³/h	m²	kW	m³/h	m²	dB(A)
3.4.45.	38,3	22443	155	29	24758	106	26,1	25414	91										58,3
4.4.45.	44,8	21031	207	35,7	23737	141	32,5	24552	122	29,9	25155	108							58,3
6.4.45.	52	18832	311	45,7	21957	211	42,5	22989	183	39,7	23789	161	35,1	24917	131	32,9	25647	111	58,3
8.4.45.							49,3	21647	244	46,7	22574	215	42,3	23931	175	40,3	24848	149	58,3
3.4.56.	67,4	38342	285	50,7	40978	193	45,3	41655	167										64,7
4.4.56.	79	36550	380	61	39862	258	54,7	40758	223	50,3	41392	197							64,7
6.4.56.	93,3	33501	569	80,6	37741	387	74,4	38997	335	69	39920	296	60,4	41144	241	56,8	41891	204	64,7
8.4.56.							85,5	37349	446	81,2	38500	394	73,6	40080	321	70	41073	272	64,7
3.4.63.	94,4	54171	388	69	56851	264	61,9	57573	228										68,5
4.4.63.	111,9	52367	518	85,1	55702	352	75,6	56623	304	68,5	57290	269							68,5
6.4.63.	134,1	49208	776	111,9	53568	527	103	54830	456	95,5	55762	403	83,7	57026	328	78,1	57829	278	68,5
8.4.63.							119	53174	608	111,5	54330	537	100,8	55925	438	95,8	56950	371	68,5
3.5.45.	47,1	28049	194	36,5	30944	132	32,7	31764	114										59,1
4.5.45.	55,5	26284	259	44,9	29667	176	40,7	30687	152	37,3	31443	134							59,1
6.5.45.	65,4	23535	388	57,1	27442	264	53	28733	228	49,3	29733	202	44,1	31143	164	41,6	32057	139	59,1
8.5.45.							61,3	27054	304	58,5	28213	269	53,4	29911	219	51	31057	186	59,1
3.5.63.	116,2	67710	485	87,7	71062	330	77,8	71965	285										69,1
4.5.63.	139,1	65455	647	108,6	69626	439	97,3	70776	380	88,3	71611	336							69,1
6.5.63.	168,7	61504	970	140,6	66956	659	128,6	68534	570	118,5	69700	504	103,6	71281	410	97,3	72284	348	69,1
8.5.63.							151,4	66464	760	141,2	67911	671	124,6	69903	547	117	71186	464	69,1
3.6.45.	57,7	33656	233	43,3	37132	158	38,9	38115	137										59,6
4.6.45.	67,3	31537	311	53,1	35598	211	48,5	36821	183	44,7	37729	161							59,6
6.6.45.	78	28238	466	68,1	32926	316	63,5	34476	274	59,5	35677	242	53,1	37370	197	49,9	38466	167	59,6
8.6.45.							74,1	32462	365	70,4	33852	322	64	35891	263	61	37266	223	59,6
3.6.63.	137,3	81250	582	103,8	85273	395	93	86356	342										69,6
4.6.63.	164,3	78544	776	129	83549	527	116,7	84929	456	106,5	85932	403							69,6
6.6.63.	199,9	73800	1164	168,2	80344	791	154,8	82239	684	143,3	83639	604	125,5	85536	492	117,1	86741	418	69,6
8.6.63.							183,2	79753	912	171,8	81489	806	153	83883	656	144,2	85422	557	69,6
3.7.45.	66,9	39262	272	51,2	43319	185	45,7	44466	160										60
4.7.45.	78,5	36790	362	62,8	41528	246	56,7	42956	213	51,8	44015	188							60
6.7.45.	91,8	32941	543	79,6	38411	369	73,6	40219	319	68,6	41620	282	63,5	44281	246	59,9	45418	209	60
8.7.45.							85,4	37869	426	81,4	39492	376							60
3.7.63.	160,4	94792	679	121,6	99486	461	108,7	100749	399										70,2
4.7.63.	191,9	91635	906	151	97474	615	136,4	99085	532	124,3	100254	470							70,2
6.7.63.	233,4	86101	1358	196,6	93735	923	180,7	95945	798	167,2	97578	705	146,2	99792	574	136,4	101198	487	70,2
8.7.63.							213,9	93046	1064	200,4	95071	940	178,2	97864	766	167,7	99659	650	70,2
3.8.45.	74,9	44869	311	58,4	49505	211	52,4	50818	182										60,4
4.8.45.	88,3	42044	414	71,8	47460	281	65,2	49091	243	59,8	50301	215							60,4
6.8.45.	104,4	37644	621	91,4	43896	422	84,9	45962	365	79,3	47565	322	70,2	49823	263	65,8	51286	223	60,4
8.8.45.							98,6	43277	487	93,4	45131	430							60,4

* =Sound pressure indication (LpA) at 3 m distance each air cooler (+/- 2 dB(A)), free field conditions, according EN13487

Drawing

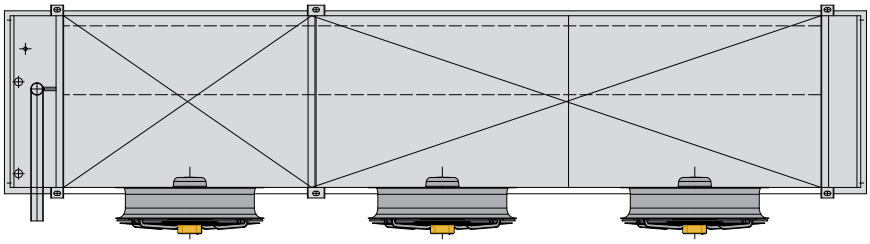

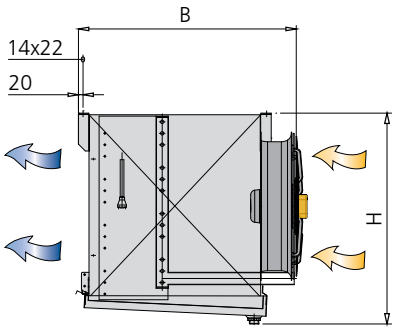

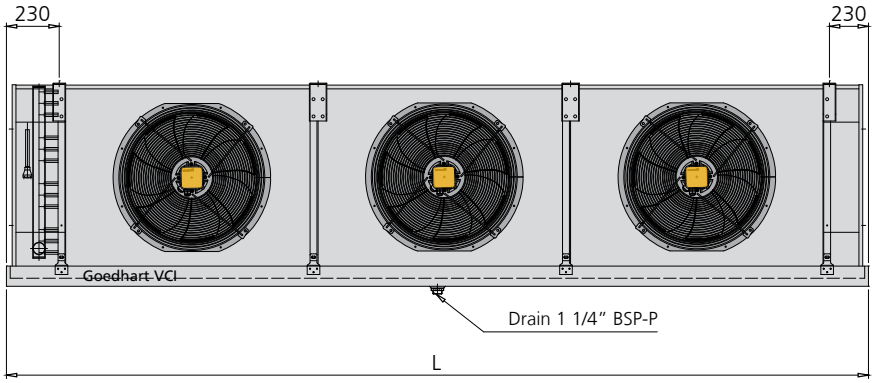

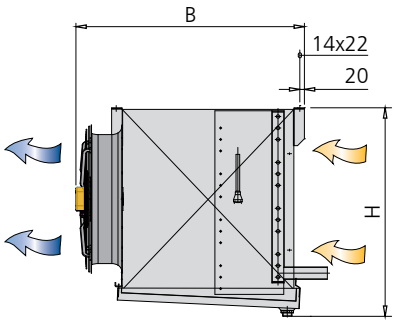

Blow-through Goedhart VCI-B

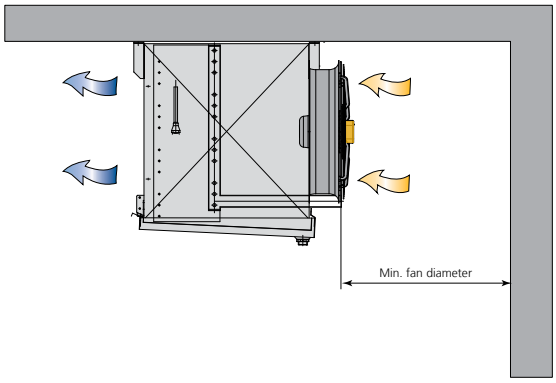

Draw-through Goedhart VCI-Z

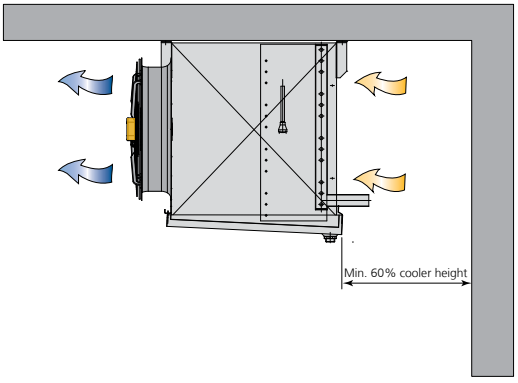

The dimensions in the tables are external dimensions of the heat exchanger. Measures such as suspension points, but also internal volume [dm3], other conditions, refrigerants, coolants and materials are available in the Goedhart GPC selection program. Goedhart GPC is free to download from www.goedhart.eu

Goedhart SCP air coolers Cu/Al

Goedhart VCI -p en VCI-i

Dimensions

Type VCI	Dimensions			Weight					
	L	B	H	4 mm	6 mm	7 mm	8 mm	10 mm	12 mm
	mm	mm	mm	kg	kg	kg	kg	kg	kg
3.1.40.	1156	590	620			65			
4.1.40.	1156	640	620	77	73	72			
6.1.40.	1156	740	620	95	87	85	85	82	
8.1.40.	1156	840	620		103	100	98	95	95
1.1.40.	1156	940	620				112	108	108
3.1.45.	1256	560	720			76			
4.1.45.	1256	610	720	93	87	85			
6.1.45.	1256	710	720	115	105	103	101	98	
8.1.45.	1256	810	720		125	121	117	114	114
1.1.45.	1256	910	720				135	129	129
3.1.56.	1556	780	920			135			
4.1.56.	1556	830	920	164	152	148			
6.1.56.	1556	930	920	200	182	177	173	167	
8.1.56.	1556	1030	920		212	204	200	192	192
1.1.56.	1556	1130	920				226	217	216
3.1.63.	1656	795	1120			176			
4.1.63.	1656	845	1120	215	198	194			
6.1.63.	1656	945	1120	260	235	228	222	215	
8.1.63.	1656	1045	1120		274	265	257	247	247
1.1.63.	1656	1145	1120				291	277	277
3.2.40.	1856	590	620			103			
4.2.40.	1856	640	620	127	118	115			
6.2.40.	1856	740	620	157	142	138	135	131	
8.2.40.	1856	840	620		168	163	158	152	153
1.2.40.	1856	940	620				180	172	173
3.2.45.	2056	560	720			124			
4.2.45.	2056	610	720	156	143	139			
6.2.45.	2056	710	720	195	175	169	164	159	
8.2.45.	2056	810	720		208	200	194	185	186
1.2.45.	2056	910	720				222	212	211
3.2.56.	2656	780	920			226			
4.2.56.	2656	830	920	282	258	251			
6.2.56.	2656	930	920	349	312	302	293	282	
8.2.56.	2656	1030	920		366	352	341	326	326
1.2.56.	2656	1130	920				389	370	370
3.2.63.	2856	795	1120			300			
4.2.63.	2856	845	1120	376	343	334			
6.2.63.	2856	945	1120	463	412	398	387	372	
8.2.63.	2856	1045	1120		484	464	449	429	429
1.2.63.	2856	1145	1120				511	486	484
3.3.45.	2856	560	720			172			
4.3.45.	2856	610	720	219	199	194			
6.3.45.	2856	710	720	276	246	238	231	222	
8.3.45.	2856	810	720		293	280	272	260	260
1.3.45.	2856	910	720				312	297	297
3.3.56.	3756	780	920			317			
4.3.56.	3756	830	920	400	363	353			
6.3.56.	3756	930	920	497	441	426	414	397	
8.3.56.	3756	1030	920		522	500	484	462	461
1.3.56.	3756	1130	920				552	524	524
3.3.63.	4056	795	1120			426			
4.3.63.	4056	845	1120	538	488	474			
6.3.63.	4056	945	1120	664	589	567	551	529	
8.3.63.	4056	1045	1120		692	663	642	611	611
1.3.63.	4056	1145	1120				731	693	692

Type VCI	Dimensions			Weight					
	L	B	H	4 mm	6 mm	7 mm	8 mm	10 mm	12 mm
	mm	mm	mm	kg	kg	kg	kg	kg	kg
3.4.45.	3656	560	720			220			
4.4.45.	3656	610	720	280	255	247			
6.4.45.	3656	710	720	355	315	303	295	283	
8.4.45.	3656	810	720		376	360	349	332	332
1.4.45.	3656	910	720				400	380	379
3.4.56.	4856	780	920			408			
4.4.56.	4856	830	920	517	469	455			
6.4.56.	4856	930	920	645	571	550	534	511	
8.4.56.	4856	1030	920		674	646	625	595	594
1.4.56.	4856	1130	920				713	676	675
3.4.63.	5256	795	1120			553			
4.4.63.	5256	845	1120	699	632	614			
6.4.63.	5256	945	1120	868	767	738	717	686	
8.4.63.	5256	1045	1120		901	863	834	794	792
1.4.63.	5256	1145	1120				950	899	898
3.5.45.	4456	560	720			267			
4.5.45.	4456	610	720	343	311	302			
6.5.45.	4456	710	720	437	386	372	360	346	
8.5.45.	4456	810	720		460	441	426	406	405
1.5.45.	4456	910	720				492	466	465
3.5.63.	6456	795	1120			677			
4.5.63.	6456	845	1120	860	778	754			
6.5.63.	6456	945	1120	1069	943	907	880	843	
8.5.63.	6456	1045	1120		1112	1063	1027	976	975
1.5.63.	6456	1145	1120				1170	1106	1104
3.6.45.	5256	560	720			315			
4.6.45.	5256	610	720	408	367	357			
6.6.45.	5256	710	720	517	457	439	426	408	
8.6.45.	5256	810	720		545	523	505	480	480
1.6.45.	5256	910	720				582	551	550
3.6.63.	7656	795	1120			803			
4.6.63.	7656	845	1120	1021	923	894			
6.6.63.	7656	945	1120	1271	1120	1077	1044	999	
8.6.63.	7656	1045	1120		1320	1262	1219	1158	1156
1.6.63.	7656	1145	1120				1390	1314	1311
3.7.45.	6056	560	720			363			
4.7.45.	6056	610	720	470	423	409			
6.7.45.	6056	710	720	596	525	505	490	468	
8.7.45.	6056	810	720		627	600	580		
1.7.45.	6056	910	720				670		
3.7.63.	7456	795	1320			899			
4.7.63.	7456	845	1320	1150	1034	1002			
6.7.63.	7456	945	1320	1435	1259	1209	1171	1118	
8.7.63.	7456	1045	1320		1486	1418	1367	1296	1294
1.7.63.	7456	1145	1320				1561	1472	1469
3.8.45.	6856	560	720			410			
4.8.45.	6856	610	720	532	479	464			
6.8.45.	6856	710	720	676	595	573	555	531	
8.8.45.	6856	810	720		713	682	658		
1.8.45.	6856	910	720				760		



logistics centers



food & beverage



production shop floors

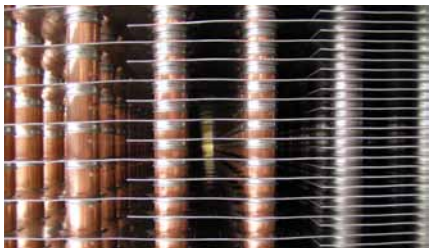

Stepped fin spacings

Goedhart VCe air coolers

Powerful quiet

The Goedhart VC*e* models are highly effective, for example, for application in food and beverage distribution centers, logistics centers and production shop floors. As required by market demand, models in the Goedhart VC*e* series feature few but large fans. With the newly designed modules the speed of the fans and the air velocity through the coil are reduced!

Coil block

Tube distance : 50x50 mm straight
Fin spacing : 4, 6, 7, 8, 10 and 12mm
Material : 15mm o.d internaly plain (p) or enhanced (i) copper tubes
: aluminium HT-fins

Goedhart VCe coil blocks have copper tubes mechanically expanded into fully collared aluminium fins. A good thermal contact is achieved by expansion of the tubes into the fin collars, that are also utilised as spacers to provide a constant distance between the fins. All coolers are pressure tested to 30 bar (lower by cooling mediums) and are supplied with a light over pressure charge of dried air. Suitable for all known refrigerants and coolants, with the exception of NH3.

Casing

- Construction for ceiling mounting
- Casing material of galvanized sheet steel
- Standard white epoxy spray finishing (RAL 9003)
- Bend/header projection by end covers, easy removed for maintenance
- Standard refrigerant connections are positioned on the left hand side of the unit when looking with the direction of the airflow.
- Cleanable execution optional
- Possible defrost by hot gas spiral or electric defrost elements will be fixed to the bottom side of the coil.
- Stainless steel fasteners

Goedhart VCe features

- For cooling and freezing applications
- Blow-through or draw-through execution possible
- Available with internally plain or enhanced copper tubes
- Consisting of 132 models
- Capacity range from 14,5 to 188,0kW at SC2.
- EC fan technology possible
- Highly effective air cooler due to new designed modules and fans
- Up to 6 fans, fan diameter 500, 630, 710 and 800 mm
- Suitable for most refrigerants / coolants with exception of NH_3
- Available with internally plain or enhanced copper tubes
- ZAplus fan optional (most energy efficient fan on the market today)
- Goedhart VCe is delivered on a wooden frame for easy mounting

Goedhart SCP air coolers Cu/Al

Goedhart VCe-p en VCe-i

Goedhart VCe - Air coolers



1	2	3	4			
VCe	B	p	6	3	63	7
				5	6	7

1. Range : VCe
2. Air direction : B=blow Z=draw
3. Tube execution : p = internally plain
   i = internally enhanced
4. Number of rows deep : 6, 8, 10
5. Number of fans : 1 - 6
6. Fan diameter : 500, 630, 710, 800
7. Fin spacing : 4, 6, 7, 8, 10, 12

Goedhart VCe- Fan information

Fan diameter	Tension	Δ			Y			Δ	Y	Δ			
		Speed	Nominal power	FLC	Speed	Nominal power	FLC	Sound power indication each fan LwA (+/-2dB(A))		Speed	Nominal power	FLC	Sound power indication each fan LwA (+/-2dB(A))
mm	V	min^{-1}	Watt	A	min^{-1}	Watt	A	dB(A)	dB(A)	min^{-1}	Watt	A	dB(A)
Three phase - 50Hz										**Three phase - 60Hz**			
500	3x400/690	1340	840	1,45	940	540	0,96	81	75	1480	1200	2,00	**
630	3x400/690	1360	1500	2,70	1100	1100	1,80	88	83	1640	2900	4,60	**
500	3x400/690	880	290	0,74	590	150	0.36	72	64	970	440	0,90	**
630	3x400/690	900	620	1,25	720	440	0,72	73	67	1040	1000	1,55	**
710	3x400/690	900	940	1,70	690	620	1,05	76	68	1070	1550	2,80	**
800	3x400/690	815	1700	3,50	600	920	1,70	80	-	910	2500	4,20	**
Single phase - 50Hz										**Single phase - 60Hz**			
500	1x230	1240	720	3,20				81,5		1260	1000	4,40	**
500	1x230	900	270	1,25				71,5		900	380	1,75	**

** Ask your Goedhart contact for the sound power indication

Goedhart SCP air coolers Cu/Al

Goedhart VCe-p

Capacities

Type VCe-p	4 mm			5 mm			6 mm			7 mm			8 mm			10 mm			12 mm			LpA @ 3 m (+/- 2 dB(A))
	DT1 = 8K (SCZ) air on= 0°C (-8/0)	Air volume	Surface	DT1 = 8K (SCZ) air on= 0°C (-8/0)	Air volume	Surface	DT1 = 8K (SCZ) air on= 0°C (-8/0)	Air volume	Surface	DT1 = 8K (SCZ) air on= 0°C (-8/0)	Air volume	Surface	DT1 = 8K (SCZ) air on= 0°C (-8/0)	Air volume	Surface	DT1 = 8K (SCZ) air on= 0°C (-8/0)	Air volume	Surface	DT1 = 8K (SCZ) air on= 0°C (-8/0)	Air volume	Surface	
	kW	m³/h	m²	kW	m³/h	m²	kW	m³/h	m²	kW	m³/h	m²	kW	m³/h	m²	kW	m³/h	m²	kW	m³/h	m²	dB(A)
3.1.50.*										7,1	8598	33										56,0
4.1.50.*	9,8	7428	76				6,3	8193	52	5,1	8398	45										56,0
6.1.50.*	14,7	6737	114				12,6	7703	77	11,8	7994	67	11,1	8207	59	10	8484	48				56,0
8.1.50.*							14,8	7264	103	14,1	7613	89	13,5	7879	79	12,3	8244	64	11,7	8468	54	56,0
1.1.50.*													15,2	7571	98	14,1	8004	80	13,5	8284	68	56,0
4.1.63.*				13,9	9217	88				11	9804	64										51,7
6.1.63.*				17,6	8550	131				15,2	9335	96				12,8	9906	69	12,1	10106	58	51,7
8.1.63.*										17,7	8902	127				15,5	9623	92	14,9	9888	78	51,7
4.1.71.*				18,9	12267	126				15,7	12792	92										53,5
6.1.71.*				24,2	11649	189				21	12374	137				17,2	12885	99	16,3	13066	84	53,5
8.1.71.*										24,9	11979	183				20,9	12630	132	19,9	12867	112	53,5
4.1.80.*				28,5	20305	168				23,6	21322	122										57,2
6.1.80.*				36,4	19091	251				31,6	20514	183				26,2	21496	132	24,7	21832	112	57,2
8.1.80.*										37,6	19740	244				31,5	21012	176	29,8	21464	149	57,2
3.2.50.*										8,7	17187	67										58,7
4.2.50.*	22,7	14838	151				16,6	16375	103	14,4	16786	89										58,7
6.2.50.*	29,3	13452	227				25,7	15390	154	23,8	15974	133	22,3	16402	118	20	16961	96				58,7
8.2.50.*							29,6	14508	205	28,2	15207	178	26,9	15743	157	24,5	16476	128	23,3	16928	108	58,7
1.2.50.*													30,4	15123	196	28,1	15995	160	27	16556	136	58,7
4.2.63.*				27,7	18415	174				21,9	19596	127										54,4
6.2.63.*				35,2	17077	262				30,3	18653	190				25,5	19805	137	24,2	20207	116	54,4
8.2.63.*										35,4	17784	254				31	19232	183	29,8	19766	155	54,4
4.2.71.*				37,7	24521	251				31,8	25575	183										56,1
6.2.71.*				48,5	23281	377				42,1	24735	274				34,4	25761	197	32,5	26127	167	56,1
8.2.71.*										49,7	23945	366				41,8	25251	263	39,7	25727	223	56,1
4.2.80.*				57,3	40591	335				48,1	42630	244										59,7
6.2.80.*				74,3	38157	502				63,8	41010	365				52,6	42982	263	49,5	43655	223	59,7
8.2.80.*										75,1	39458	487				63	42011	350	59,5	42916	297	59,7
3.3.50.*										21,3	25779	100										60
4.3.50.*	37	22249	227				29,9	24556	154	27,3	25174	133										60
6.3.50.*	44,4	20169	340				37,7	23076	231	34,6	23953	200	31,9	24597	176	27,5	25437	144				60
8.3.50.*							44,6	21753	308	42,1	22803	266	39,7	23607	235	35,5	24708	192	33,5	25388	163	60
1.3.50.*													45,6	22675	294	42,3	23985	240	40,7	24830	203	60
4.3.63.*				42,8	27615	261				35	29388	190										55,8
6.3.63.*				53,1	25606	392				45,9	27973	285				38,2	29701	205	36,2	30305	174	55,8
8.3.63.*										54	26667	381				46,5	28841	274	44,5	29643	232	55,8
4.3.71.*				58,9	36775	376				48,1	38359	274										57,4
6.3.71.*				73,5	34913	565				63,6	37096	411				52	38639	296	49,2	39186	251	57,4
8.3.71.*										74,8	35910	548				62,7	37872	394	59,6	38587	334	57,4
4.3.80.*				86,4	60877	502				66,7	63941	365										61
6.3.80.*				106,2	57223	753				95,9	61506	548				79,4	64468	394	74,5	65478	334	61
8.3.80.*										114	59177	730				96,8	63009	525	91,8	64369	446	61
3.4.50.*										29,2	34369	133										60,9
4.4.50.*	45,5	29659	302				33,1	32738	205	28,7	33563	178										60,9
6.4.50.*	59,7	26884	453				52	30762	308	48,3	31934	266	45,3	32792	235	40,3	33913	192				60,9
8.4.50.*							60,1	28998	410	57,2	30399	355	54,3	31471	314	49,2	32940	255	47	33848	217	60,9
1.4.50.*													60,9	30229	392	56,1	31975	319	53,8	33102	271	60,9
4.4.63.*				56	36815	348				43,8	39181	254										56,7
6.4.63.*				71,1	34134	523				60,8	37292	380				51,2	39598	274	48,5	40404	232	56,7
8.4.63.*										71,9	35550	507				62,2	38450	365	59,6	39520	310	56,7
4.4.71.*				75,6	49030	502				64,5	51142	365										58,3
6.4.71.*				98,5	46546	753				85,1	49459	548				68,9	51516	394	65	52247	334	58,3
8.4.71.*										100	47875	730				83,5	50493	525	80,3	51446	446	58,3
4.4.80.*				115,5	81163	669				97	85250	487										61,8
6.4.80.*				150,1	76289	1003				128,5	82002	730				103,9	85952	525	97	87302	445	61,8
8.4.80.*										151,2	78895	973				125,9	84008	700	121,1	85822	594	61,8
3.5.50.*										26,3	42959	166										61,6
4.5.50.*	62,2	37069	377				48,8	40919	256	43,6	41951	222										61,6
6.5.50.*	73,7	33600	566				61,8	38449	385	59,9	39913	333	56,4	40987	294	50,6	42390	239				61,6
8.5.50.*							69,7	36242	513	64,8	37993	444	60,2	39334	392	61	41173	319	58,4	42308	271	61,6
1.5.50.*													75,2	37781	490	70,4	39964	399	68	41375	338	61,6
3.6.50.*										39,7	51548	200										62,1
4.6.50.*	38,7	44480	453				60,5	49100	308	55	50340	266										62,2
6.6.50.*	90	40315	679				78,3	46135	461	72,4	47894	399	67,1	49183	353	58,7	50865	287				62,1
8.6.50.*							89,8	43486	615	84,5	45589	532	79,5	47197	470	70,9	49405	383	66,9	50769	325	62,1
1.6.50.*													92	45334	588	85	47955	479	81,8	49647	406	62,1

* =Sound pressure indication (LpA) at 3 m distance each air cooler (+/- 2 dB(A)), free field conditions, according EN13487

Goedhart SCP air coolers Cu/Al

Goedhart VCe-i

Capacities

Type VCe-i	4 mm			5 mm			6 mm			7 mm			8 mm			10 mm			12 mm			LpA @ 3 m (+/- 2 dB(A))
	DT1 = 8K (SCZ) air on= 0°C (-8/0)	Air volume	Surface	DT1 = 8K (SCZ) air on= 0°C (-8/0)	Air volume	Surface	DT1 = 8K (SCZ) air on= 0°C (-8/0)	Air volume	Surface	DT1 = 8K (SCZ) air on= 0°C (-8/0)	Air volume	Surface	DT1 = 8K (SCZ) air on= 0°C (-8/0)	Air volume	Surface	DT1 = 8K (SCZ) air on= 0°C (-8/0)	Air volume	Surface	DT1 = 8K (SCZ) air on= 0°C (-8/0)	Air volume	Surface	
	kW	m³/h	m²	kW	m³/h	m²	kW	m³/h	m²	kW	m³/h	m²	kW	m³/h	m²	kW	m³/h	m²	kW	m³/h	m²	dB(A)
3.1.50.*	13,4	7842	57				10,1	8447	39	9,1	8598	33										56,0
4.1.50.*	15,8	7428	76				12,5	8193	52	11,4	8398	45	10,5	8540	39							56,0
6.1.50.*	18,9	6737	114				16,3	7703	77	15,1	7994	67	14	8207	59	12,4	8484	48	11,6	8648	41	56,0
8.1.50.*										17,6	7613	89	16,7	7879	79	15	8244	64	14,3	8468	54	56,0
1.1.50.*																						56,0
4.1.63.*				18,1	9217	88				14,5	9804	64										51,7
6.1.63.*				22,2	8550	131				19,1	9335	96				15,6	9906	69	14,7	10106	58	51,7
8.1.63.*										22,1	8902	127				18,8	9623	92	17,9	9888	78	51,7
4.1.71.*				24,6	12267	126				20	12792	92										53,5
6.1.71.*				30,7	11649	189				26,1	12374	137				20,9	12885	99	19,8	13066	84	53,5
8.1.71.*										30,4	11979	183				25,4	12630	132	24,2	12867	112	53,5
4.1.80.*				37,4	20305	168				30,2	21322	122										57,2
6.1.80.*				46,9	19091	251				39,7	20514	183				32,3	21496	132	30,2	21832	112	57,2
8.1.80.*										46,4	19740	244				38,9	21012	176	37	21464	149	57,2
3.2.50.*	26,8	15669	113				20,6	16886	77	18,4	17187	67										58,7
4.2.50.*	31,6	14838	151				25	16375	103	22,8	16786	89	20,9	17071	78							58,7
6.2.50.*	37,6	13452	227				32,5	15390	154	30,1	15974	133	28	16402	118	24,7	16961	96	23,1	17291	81	58,7
8.2.50.*										35,2	15207	178	33,3	15743	157	30,1	16476	128	28,5	16928	108	58,7
1.2.50.*																						58,7
4.2.63.*				36,1	18415	174				28,9	19596	127										54,4
6.2.63.*				44,3	17077	262				37,9	18653	190				31,1	19805	137	29,4	20207	116	54,4
8.2.63.*										44,1	17784	254				37,5	19232	183	35,8	19766	155	54,4
4.2.71.*				49,2	24521	251				40	25575	183										56,1
6.2.71.*				61,3	23281	377				52,2	24735	274				41,7	25761	197	39,5	26127	167	56,1
8.2.71.*										60,6	23945	366				50,7	25251	263	48,4	25727	223	56,1
4.2.80.*				74,8	40591	335				60,3	42630	244										59,7
6.2.80.*				93,7	38157	502				79,3	41010	365				63,8	42982	263	59,9	43655	223	59,7
8.2.80.*										92,7	39458	487				77,7	42011	350	74	42916	297	59,7
3.3.50.*	40,8	23496	170				30,1	25324	115	26,7	25779	100										60
4.3.50.*	47,6	22249	227				38,1	24556	154	34,4	25174	133	31,3	25603	118							60
6.3.50.*	56,4	20169	340				48,8	23076	231	45	23953	200	41,7	24597	176	36,6	25437	144	34,5	25932	122	60
8.3.50.*										52,3	22803	266	49,2	23607	235	43,9	24708	192	41,7	25388	163	60
1.3.50.*																						60
4.3.63.*				54,5	27615	261				43,8	29388	190										55,8
6.3.63.*				66,5	25606	392				57,1	27973	285				46,6	29701	205	44	30305	174	55,8
8.3.63.*										66,2	26667	381				56,1	28841	274	53,5	29643	232	55,8
4.3.71.*				74,8	36775	376				59,9	38359	274										57,4
6.3.71.*				91,9	34913	565				78,2	37096	411				62,5	38639	296	58,8	39186	251	57,4
8.3.71.*										90,9	35910	548				75,4	37872	394	71,9	38587	334	57,4
4.3.80.*				112	60877	502				90,2	63941	365										61
6.3.80.*				139,2	57223	753				118,9	61506	548				96,7	64468	394	90,4	65478	334	61
8.3.80.*										139,7	59177	730				117,3	63009	525	111	64369	446	61
3.4.50.*	53,8	31323	227				41,2	33763	154	36,7	34369	133										60,9
4.4.50.*	63,2	29659	302				49,3	32738	205	44,9	33563	178	41,4	34135	157							60,9
6.4.50.*	75,2	26884	453				65	30762	308	60	31934	266	55,6	32792	235	49,4	33913	192	46,4	34574	162	60,9
8.4.50.*										69,9	30399	355	66,4	31471	314	60,1	32940	255	57	33848	217	60,9
1.4.50.*																						60,9
4.4.63.*				70,9	36815	348				57,9	39181	254										56,7
6.4.63.*				88,6	34134	523				75,7	37292	380				62,2	39598	274	58,7	40404	232	56,7
8.4.63.*										88,1	35550	507				75	38450	365	71,6	39520	310	56,7
4.4.71.*				99	49030	502				79,9	51142	365										58,3
6.4.71.*				122,5	46546	753				104,2	49459	548				83,4	51516	394	78,9	52247	334	58,3
8.4.71.*										121,2	47875	730				101,3	50493	525	96,7	51446	446	58,3
4.4.80.*				150,5	81163	669				120,6	85250	487										61,8
6.4.80.*				187,5	76289	1003				158,6	82002	730				127,5	85952	525	119,7	87302	445	61,8
8.4.80.*										185,4	78895	973				155,3	84008	700	147,9	85822	594	61,8
3.5.50.*	68,5	39150	283				51,1	42202	192	45,4	42959	166										61,6
4.5.50.*	80,4	37069	377				62,7	40919	256	56,1	41951	222	50,7	42668	196							61,6
6.5.50.*	93,8	33600	566				80,5	38449	385	74,9	39913	333	69,9	40987	294	61,8	42390	239	57,9	43215	203	61,6
8.5.50.*										85,6	37993	444	80,8	39334	392	73,4	41173	319	70,2	42308	271	61,6
1.5.50.*																						61,6
3.6.50.*	81	46976	340				61,9	50639	231	55,1	51548	200										62,1
4.6.50.*	95,8	44480	453				76,3	49100	308	68,7	50340	266	62,6	51199	235							62,2
6.6.50.*	113	40315	679				97,5	46135	461	89,9	47894	399	83,3	49183	353	73,4	50865	287	69	51857	244	62,1
8.6.50.*										104,5	45589	532	98,4	47197	470	87,8	49405	383	83	50769	325	62,1
1.6.50.*																						62,1

* =Sound pressure indication (LpA) at 3 m distance each air cooler (+/- 2 dB(A)), free field conditions, according EN13487

Drawing

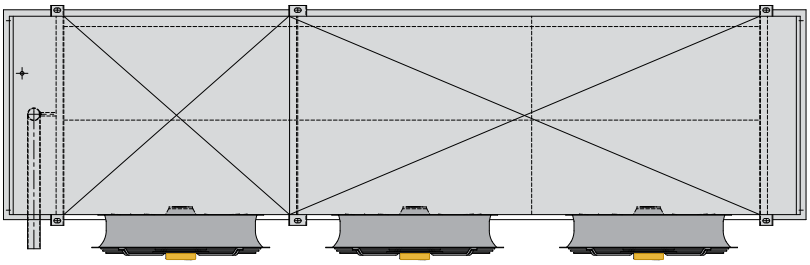

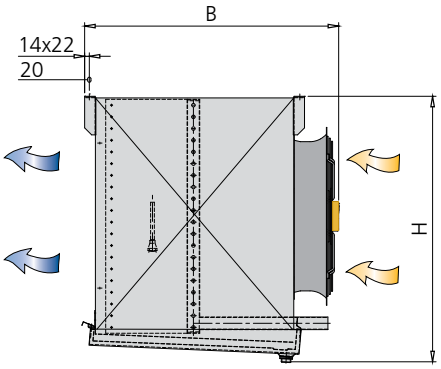

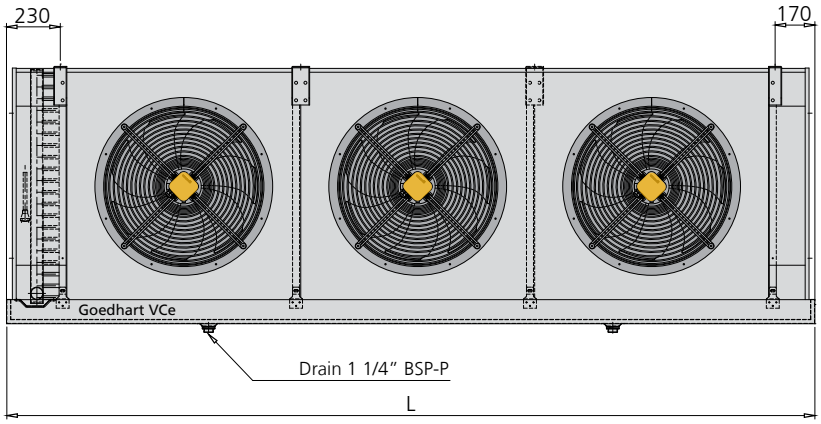

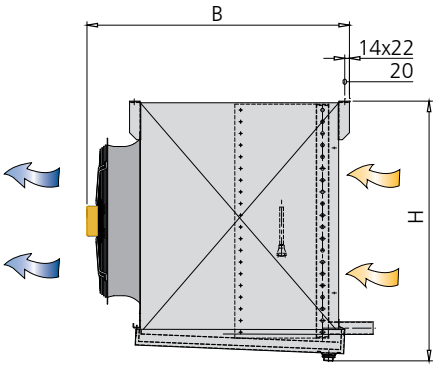

Blow-through Goedhart VCe-B

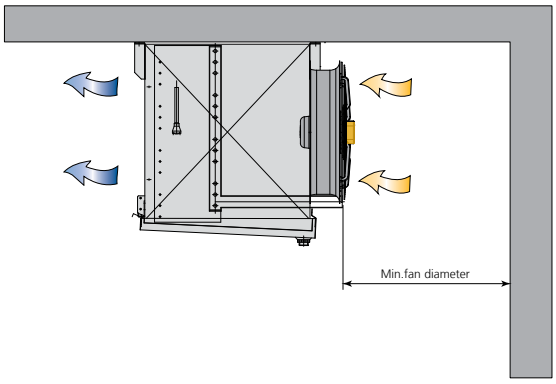

Draw-through Goedhart VCe-Z

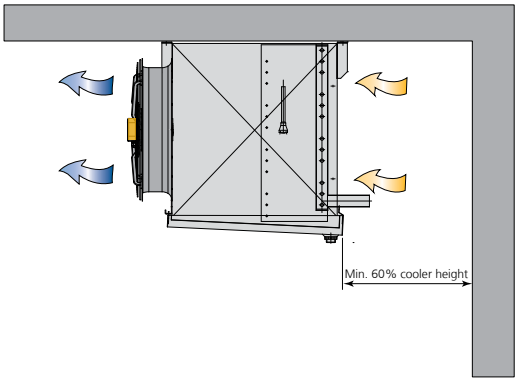

The dimensions in the tables are external dimensions of the heat exchanger. Measures such as suspension points, but also internal volume [dm3], other conditions, refrigerants, coolants and materials are available in the Goedhart GPC selection program. Goedhart GPC is free to download from www.goedhart.eu

Goedhart SCP air coolers Cu/Al

Goedhart VCe -p en VCe-i

Dimensions

Type VCe	Dimensions			Weight						
	L	B	H	4 mm	5 mm	6 mm	7 mm	8 mm	10 mm	12 mm
	mm	mm	mm	kg	kg	kg	kg	kg	kg	kg
3.1.50.*	1456	730	820				101			
4.1.50.*	1456	780	820	122		114	111			
6.1.50.*	1456	880	820	148		136	133	130	126	
8.1.50.*	1456	980	820			159	154	150	145	145
1.1.50.*	1456	1080	820					170	164	163
4.1.63.*	1456	840	1120		158		149			
6.1.63.*	1456	940	1120		191		177		166	162
8.1.63.*	1456	1040	1120				205		190	185
4.1.71.*	1656	940	1320		229		216			
6.1.71.*	1656	1040	1320		275		255		239	234
8.1.71.*	1656	1140	1320				292		272	264
4.1.80.*	2056	1170	1320		322		304			
6.1.80.*	2056	1270	1320		380		353		333	324
8.1.80.*	2056	1370	1320				404		377	367
3.2.50.*	2456	730	820				170			
4.2.50.*	2456	780	820	209		193	188			
6.2.50.*	2456	880	820	257		232	225	219	212	
8.2.50.*	2456	980	820			271	262	254	244	243
1.2.50.*	2456	1080	820					289	275	275
4.2.63.*	2456	840	1120		269		250			
6.2.63.*	2456	940	1120		328		300		279	271
8.2.63.*	2456	1040	1120				351		323	312
4.2.71.*	2856	940	1320		401		374			
6.2.71.*	2856	1040	1320		485		445		415	403
8.2.71.*	2856	1140	1320				516		475	459
4.2.80.*	3656	1170	1320		578		542			
6.2.80.*	3656	1270	1320		688		634		593	577
8.2.80.*	3656	1370	1320				752		696	676
3.3.50.*	3456	730	820				238			
4.3.50.*	3456	780	820	297		273	265			
6.3.50.*	3456	880	820	368		330	319	310	299	
8.3.50.*	3456	980	820			387	373	362	347	347
1.3.50.*	3456	1080	820					413	393	393
4.3.63.*	3456	840	1120		381		354			
6.3.63.*	3456	940	1120		471		428		397	384
8.3.63.*	3456	1040	1120				503		461	444
4.3.71.*	4056	940	1320		593		553			
6.3.71.*	4056	1040	1320		720		659		614	596
8.3.71.*	4056	1140	1320				765		704	680
4.3.80.*	5256	1170	1320		864		810			
6.3.80.*	5256	1270	1320		1030		948		887	864
8.3.80.*	5256	1370	1320				1087		1005	973
3.4.50.*	4456	730	820				307			
4.4.50.*	4456	780	820	383		350	341			
6.4.50.*	4456	880	820	475		424	410	399	384	
8.4.50.*	4456	980	820			499	479	464	444	443
1.4.50.*	4456	1080	820					530	503	503
4.4.63.*	4456	840	1120		512		475			
6.4.63.*	4456	940	1120		631		574		531	516
8.4.63.*	4456	1040	1120				672		615	593
4.4.71.*	5256	940	1320		772		718			
6.4.71.*	5256	1040	1320		939		857		796	773
8.4.71.*	5256	1140	1320				997		915	883
4.4.80.*	6856	1170	1320		1137		1066			
6.4.80.*	6856	1270	1320		1357		1249		1168	1137
8.4.80.*	6856	1370	1320				1433		1324	1282
3.5.50.*	5456	730	820				376			
4.5.50.*	5456	780	820	470		429	417			
6.5.50.*	5456	880	820	584		521	503	489	470	
8.5.50.*	5456	980	820			613	589	570	545	544
1.5.50.*	5456	1080	820					649	619	617
3.6.50.*	6456	730	820				444			
4.6.50.*	6456	780	820	557		508	494			
6.6.50.*	6456	880	820	693		617	595	579	556	
8.6.50.*	6456	980	820			725	696	675	644	643
1.6.50.*	6456	1080	820					769	731	729



Goedhart VNS air coolers

Agricultural

The Goedhart VNS range of ceiling mounted aircoolers are specially designed for use in chill rooms, working with an air temperature of ± 0°C. The aircoolers are especially suitable for vegetable and fruit storage, working with a small D T to prevent dehydration of the product. The height of the aircooler is low, so the maximum space in the chill room can be utilised.



Coil block

Tube distance : 50x50 mm straight
Fin spacing : 7 mm
Material : 15mm o.d internaly plain copper tubes
: aluminium HT-fins

Goedhart VNS coil blocks have copper tubes mechanically expanded into fully collared aluminium fins. A good thermal contact is achieved by expansion of the tubes into the fin collars, that are also utilised as spacers to provide a constant distance between the fins. All coolers are pressure tested to 30 bar (lower by cooling mediums) and are supplied with a light over pressure charge of dried air. Suitable for all known refrigerants and coolants, with the exception of NH3.



Casing

- Construction for ceiling mounting
- Casing material of galvanized sheet steel
- Standard white epoxy spray finishing (RAL 9003)
- Bend/header projection by end covers, easy removed for maintenance
- Standard refrigerant connections are positioned on the left hand side of the unit when looking with the direction of the airflow.
- Possible defrost by hot gas spiral or electric defrost elements will be fixed to the bottom side of the coil.
- Stainless steel fasteners
-



Goedhart VNS features

- Especially for agricultural applications
- Consisting of 16 models
- Capacity range from 12,1 to 62,5 kW at SC2.
- EC fan technology possible
- Suitable for most refrigerants / coolants with exception of NH_3
- Up to 8 fans, fan diameter 350, 400, 450 and 500 mm
- Goedhart VNS is delivered on a wooden frame for easy mounting

Goedhart VNS - Air coolers



1	2			
VNS	6	3	45	7
		3	4	5

1. Range :VNS
2. Number of rows deep : 6
3. Number of fans : 1 - 8
4. Fan diameter : 350, 400, 450, 500
5. Fin spacing : 7

Goedhart VNS - Fan information

Fan diameter	Tension	Δ			Y			Δ	Y	Δ			
		Speed	Nominal power	FLC	Speed	Nominal power	FLC	Sound power indication each fan LwA (+/-2dB(A))		Speed	Nominal power	FLC	Sound power indication each fan LwA (+/-2dB(A))
mm	V	min-1	Watt	A	min-1	Watt	A	dB(A)	dB(A)	min-1	Watt	A	dB(A)
Three phase - 50Hz										**Three phase - 60Hz**			
350	3x400/690	1390	190	0,40	1170	140	0,23	73	69	1630	300	0,46	**
400	3x400/690	1370	230	0,44	1110	170	0,27	75	70,5	1580	370	0,56	**
450	3x400/690	1350	540	1,10	1020	360	0,66	75	70	1560	880	1,40	**
500	3x400/690	1340	840	1,45	940	540	0,96	78	75	1480	1200	2,00	**
450	3x400/690	900	180	0,50	630	100	0.24	67	61	1020	280	0,60	**
500	3x400/690	880	290	0,74	590	150	0.36	72	64	970	440	0,90	**
Single phase - 50Hz										**Single phase - 60Hz**			
350	1x230	1390	150	0,65				75		1520	230	1,00	**
450	1x230	1390	600	2,90				80		1430	820	3,50	**
500	1x230	1240	720	3,20				81,5		1260	1000	4,40	**
400	1x230	950	130	0,60				68		1110	170	0,78	**
500	1x230	900	270	1,25				71.5		900	380	1,75	**

** Ask your Goedhart contact for the sound power indication

Capacities

Type VNS	Capacity DT1 (R404A) DT1=8K Air on=0°C -8 / 0	Air volume	Sound pressure indication (LpA) op 3 m (+/- 2 dB(A)) *	Surface
	kW	m³/h	dB(A)	m²
6.3.35.7	8,7	7719	55,6	77
6.4.35.7	16,0	10289	56,7	103
6.5.35.7	21,0	12858	57,4	128
6.6.35.7	24,0	15427	58,0	154
6.7.35.7	29,4	17997	58,5	180
6.8.35.7	33,8	20567	58,9	205
6.3.40.7	16,6	9888	57,4	107
6.4.40.7	22,2	13182	58,4	143
6.5.40.7	26,8	16476	59,2	178
6.6.40.7	33,6	19769	59,7	214
6.3.45.7	28,3	18234	57,1	163
6.4.45.7	37,5	24310	58,1	217
6.5.45.7	47,5	30384	58,8	271
6.6.45.7	55,8	36457	59,3	325
6.5.50.7	51,6	37879	61,6	285
6.6.50.7	65,9	45455	62,2	342

* =Sound pressure indication (LpA) at 3 m distance each air cooler (+/- 2 dB(A)), free field conditions, according EN13487

Drawing

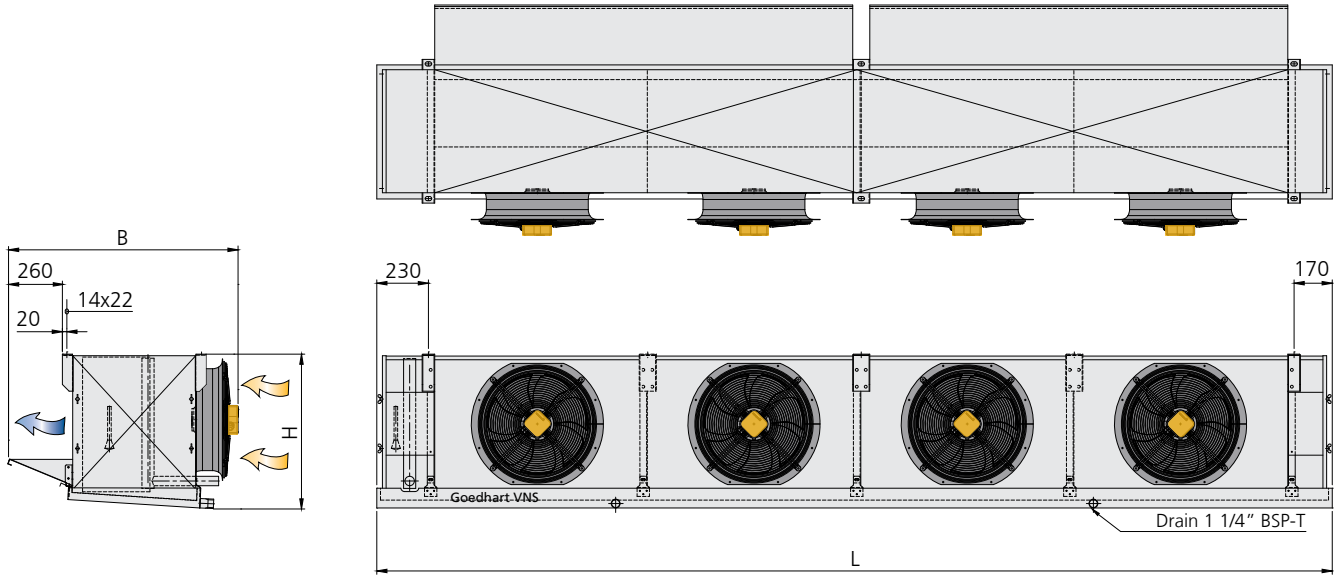

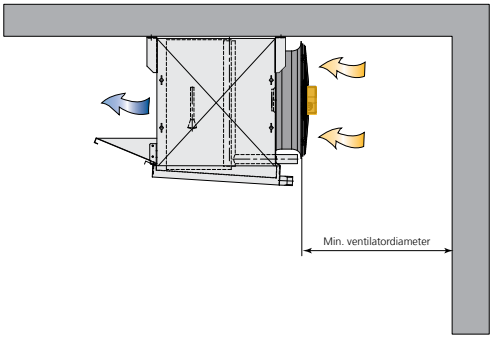

The dimensions in the tables are external dimensions of the heat exchanger. Measures such as suspension points, but also internal volume [dm3], other conditions, refrigerants, coolants and materials are available in the Goedhart GPC selection program. Goedhart GPC is free to download from www.goedhart.eu

Goedhart SCP air coolers Cu/Al

Goedhart VNS

Dimensions

Type	Dimensions			
	L	B	H	Weight (empty)
VNS	**mm**	**mm**	**mm**	**kg**
6.3.35.7	2256	970	540	149
6.4.35.7	2856	970	540	191
6.5.35.7	3456	970	540	230
6.6.35.7	4056	970	540	269
6.7.35.7	4656	970	540	310
6.8.35.7	5256	970	540	351
6.3.40.7	2706	955	590	192
6.4.40.7	3456	955	590	245
6.5.40.7	4206	955	590	300
6.6.40.7	4956	955	590	354
6.3.45.7	3306	1025	690	257
6.4.45.7	4256	1025	690	331
6.5.45.7	5206	1025	690	406
6.6.45.7	6156	1025	690	479
6.5.50.7	5456	1125	690	459
6.6.50.7	6456	1125	690	543



Goedhart DVS air coolers

Staggered air distribution

The Goedhart DVS range of dual discharge ceiling mounted air coolers are especially suitable for cooling and working room applications. The height of the aircooler is low, so the maximum space in the chill room can be utilised. The fans are mounted to the outside of the air cooler. The fans are as standard not wired on a junction box to the connection side. Wiring is available against an extra price.



Coil block

Tube distance	: 50x50 mm straight
Fin spacing	: 4, 7, 10 mm
Material	: 15mm o.d internaly plain (p) or enhanced (i) copper tubes
	: aluminium HT-fins

Goedhart DVS coil blocks have copper tubes mechanically expanded into fully collared aluminium fins. A good thermal contact is achieved by expansion of the tubes into the fin collars, that are also utilised as spacers to provide a constant distance between the fins. All coolers are pressure tested to 30 bar (lower by cooling mediums) and are supplied with a light over pressure charge of dried air. Suitable for all known refrigerants and coolants, with the exception of NH3.

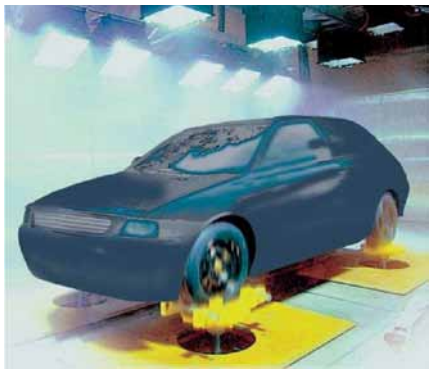

Casing

- Construction for ceiling mounting
- Casing material of galvanized sheet steel
- Standard white epoxy spray finishing (RAL 9003)
- Bend/header protection by end covers, easy removed for maintenance
- Hinged drip tray.(only construction without feet)
- Possible defrost by hot gas spiral or electric defrost elements will be fixed to the bottom side of the coil.
- Stainless steel fasteners

Goedhart DVS features

- Especially for working room applications.
- Consisting of 480 models
- Available with internally plain or enhanced copper tubes
- Capacity range from 1,0 to 150,0kW at SC2.
- EC fan technology possible
- The fans are mounted to the outside of the air cooler. easy for maintenance
- The fans are as standard not wired on a junction box (optional)
- Suitable for most refrigerants / coolants with exception of NH_3
- Goedhart DVS is delivered on a wooden frame for easy mounting
- Many options and accessories available (see p. 48)



Goedhart SCP air coolers Cu/Al

Goedhart DVS -p en DVS-i

Goedhart DVS - Air coolers



1	2	3			
DVS	p	6	3	45	7
			4	5	6

1. Range : VCI
2. Tube execution : p = internally plain
   i = internally enhanced
3. Number of rows deep : 3, 4 ,6, 8, 10
4. Number of fans : 1 - 6
5. Fan diameter : 400, 450, 560, 630
6. Fin spacing : 4, 7, 10

Goedhart DVS - Fan information

Fan diameter	Tension	Δ			Y			Δ	Y	Δ			
		Speed	Nominal power	FLC	Speed	Nominal power	FLC	Sound power indication each fan LwA (+/-2dB(A))		Speed	Nominal power	FLC	Sound power indication each fan LwA (+/-2dB(A))
mm	V	min-1	Watt	A	min-1	Watt	A	dB(A)	dB(A)	min-1	Watt	A	dB(A)
Three phase - 50Hz										**Three phase - 60Hz**			
400	3x400/690	1370	230	0,44	1110	170	0,27	76	70,5	1580	370	0,56	**
450	3x400/690	1350	540	1,10	1020	360	0,66	78	70	1560	880	1,40	**
500	3x400/690	1340	840	1,45	940	540	0,96	78	75	1480	1200	2,00	**
560	3x400/690	1280	1050	2,20	920	580	1,10	85	76	1430	1550	2,70	**
630	3x400/690	1360	1500	2,70	1100	1100	1,80	88	83	1640	2900	4,60	**
450	3x400/690	900	180	0,50	630	100	0.24	67	61	1020	280	0,60	**
500	3x400/690	880	290	0,74	590	150	0.36	72	64	970	440	0,90	**
560	3x400/690	870	340	0,70	630	210	0.38	73	65	980	540	0,88	**
630	3x400/690	900	620	1,25	720	440	0,72	73	67	1040	1000	1,55	**
Single phase - 50Hz										**Single phase - 60Hz**			
450	1x230	1390	600	2,90				80		1430	820	3,50	**
500	1x230	1240	720	3,20				81,5		1260	1000	4,40	**
400	1x230	950	130	0,60				68		1110	170	0,78	**
500	1x230	900	270	1,25				71.5		900	380	1,75	**

** Ask your Goedhart contact for the sound power indication

Capacities

Type DVS-p	4 mm					7 mm					10 mm					4p	6p
	4 poles 1500 min⁻¹ (nom)		6 poles 1000 min⁻¹ (nom)			4 poles 1500 min⁻¹ (nom)		6 poles 1000 min⁻¹ (nom)			4 poles 1500 min⁻¹ (nom)		6 poles 1000 min⁻¹ (nom)				
	DT1 = 8K (SC) air on= 0°C (-8/0)	Air volume	DT1 = 8K (SC) air on= 0°C (-8/0)	Air volume	Surface	DT1 = 8K (SC) air on= 0°C (-8/0)	Air volume	DT1 = 8K (SC) air on= 0°C (-8/0)	Air volume	Surface	DT1 = 8K (SC) air on= 0°C (-8/0)	Air volume	DT1 = 8K (SC) air on= 0°C (-8/0)	Air volume	Surface	LpA @ 3 m (+/- 2 dB(A))	LpA @ 3 m (+/- 2 dB(A))
	kW	m³/h	kW	m³/h	m²	kW	m³/h	kW	m³/h	m²	kW	m³/h	kW	m³/h	m²	dB(A)	dB(A)
3.1.40.	2,4	3168	2,1	2119	29	1,8	3474	1,5	2301	17						53,3	45,3
4.1.40.	4,2	2998	2,7	2021	39	2,3	3394	1,9	2252	23						53,3	45,3
6.1.40.	6,4	2713	4,9	1852	59	5,1	3229	3,8	2156	35	3,9	3428	2,8	2273	25	53,3	45,3
8.1.40.						6,3	3073	4,8	2066	46	5,3	3331	4,0	2215	33	53,3	45,3
1.1.40.											6,1	3234	4,7	2159	41	53,3	45,3
3.1.45.	7,6	5883	5,9	3876	46	4,7	6451	3,4	4277	27						53,1	44,1
4.1.45.	5	5590	7,4	3668	61	6,8	6293	5,4	4167	36						53,1	44,1
6.1.45.	10,2	5099	6,9	3327	91	7,1	5994	7,1	3954	54	5,1	6361	6,0	4214	39	53,1	44,1
8.1.45.						10,4	5720	7,6	3761	72	8,6	6177	6,1	4084	51	53,1	44,1
1.1.45.											10,6	6001	7,8	3959	64	53,1	44,1
3.1.50.	5,3	7832	8,2	5127	59	7,0	8516	5,6	5568	34						56,0	46,0
4.1.50.	10,1	7446	6,8	4882	78	5,3	8337	7,2	5450	46						56,0	46,0
6.1.50.	14,8	6788	11,2	4464	117	11,6	7971	8,7	5216	69	9,2	8415	6,6	5501	50	56,0	46,0
8.1.50.						14,1	7619	11	4992	92	12,2	8199	9,2	5361	66	56,0	46,0
1.1.50.											13,8	7981	10,7	5221	83	56,0	46,0
3.1.56.	12	9800	8,9	6571	81	6,4	10423	7,6	6981	48						59,9	50,9
4.1.56.	16	9442	12,8	6334	108	11,1	10258	8,5	6874	64						59,9	50,9
6.1.56.	19,5	8798	14,9	5906	163	15,3	9928	12,5	6654	96	12,8	10329	10,0	6921	69	59,9	50,9
8.1.56.						16,6	9604	11,7	6440	127	12,9	10133	12,2	6791	92	59,9	50,9
1.1.56.											17,2	9935	12,4	6660	115	59,9	50,9
3.1.63.	16,9	13392	14,2	9513	98	10,8	14205	8,7	10118	57						63,7	51,7
4.1.63.	19,4	12960	17,0	9163	130	14,9	13978	12,5	9959	76						63,7	51,7
6.1.63.	25,3	12200	20,8	8528	195	20,0	13550	16,3	9637	115	16,1	14075	13,4	10028	82	63,7	51,7
8.1.63.						23,9	13154	19,5	9321	153	20,3	13812	16,6	9838	110	63,7	51,7
1.1.63.											23,7	13561	18,8	9646	137	63,7	51,7
3.2.40.	4,9	6324	7,5	4234	58	6,3	6942	5	4599	34						56,1	48,1
4.2.40.	8,3	5982	5,2	4035	78	4,6	6782	6,5	4501	46						56,1	48,1
6.2.40.	12,8	5411	9,7	3695	117	10,1	6449	7,5	4307	69	7,9	6852	5,5	4543	49	56,1	48,1
8.2.40.						12,5	6133	9,6	4124	92	10,6	6655	7,9	4426	66	56,1	48,1
1.2.40.											12,2	6458	9,4	4312	82	56,1	48,1
3.2.45.	15,1	11752	11,8	7742	91	9,3	12893	6,8	8549	53						55,9	46,9
4.2.45.	9,9	11159	14,8	7324	121	13,6	12577	10,7	8326	71						55,9	46,9
6.2.45.	22,5	10177	17,0	6639	182	17,8	11972	14,2	7898	107	14,3	12712	11,9	8423	77	55,9	46,9
8.2.45.						20,8	11422	15,1	7508	142	17,1	12342	12,1	8160	102	55,9	46,9
1.2.45.											21,1	11988	15,5	7909	128	55,9	46,9
3.2.50.	17,7	15647	16,6	10244	117	14,1	17024	11,1	11130	69						58,7	48,7
4.2.50.	20,1	14873	13,4	9752	156	10,5	16665	14,3	10895	91						58,7	48,7
6.2.50.	29,5	13554	22,4	8914	233	23,5	15928	18,8	10423	137	19,8	16822	15,2	10997	99	58,7	48,7
8.2.50.						28,1	15219	21,9	9972	183	24,3	16385	18,3	10715	132	58,7	48,7
1.2.50.											27,9	15947	21,3	10434	164	58,7	48,7
3.2.56.	27,1	19587	22,0	13133	162	17,8	20838	15,2	13960	95						62,5	53,5
4.2.56.	32,3	18869	25,5	12657	216	22,1	20508	16,9	13741	127						62,5	53,5
6.2.56.	39,4	17574	30,7	11799	324	30,9	19842	24,9	13302	190	25,6	20651	20,0	13837	137	62,5	53,5
8.2.56.						36,5	19193	29,1	12872	254	31,5	20254	24,4	13574	183	62,5	53,5
1.2.56.											28,6	19859	27,9	13313	228	62,5	53,5
3.2.63.	34,2	26770	28,4	19014	194	23,7	28401	20,1	20228	114						66,4	54,4
4.2.63.	38,6	25901	34,5	18309	259	29,9	27946	24,9	19911	152						66,4	54,4
6.2.63.	51,3	24374	41,5	17038	389	40,0	27086	32,5	19263	229	32,1	28140	26,8	20048	164	66,4	54,4
8.2.63.						47,6	26290	39	18627	305	40,6	27612	33,2	19665	219	66,4	54,4
1.2.63.											47,3	27107	37,5	19280	274	66,4	54,4
3.3.45.	22,7	17620	17,7	11607	136	16,4	19336	13,4	12822	80						57,4	48,4
4.3.45.	26,5	16730	19,7	10980	181	17,0	18859	12	12486	107						57,4	48,4
6.3.45.	33,6	15255	25,9	9952	272	27,2	17952	21,2	11842	160	22,4	19064	17,9	12631	115	57,4	48,4
8.3.45.						23,1	17124	24,9	11257	213	27,5	18507	21,6	12236	153	57,4	48,4
1.3.45.											31,8	17974	24,4	11858	192	57,4	48,4
3.3.50.	29,3	23463	25,2	15360	175	21,2	25532	16,7	16692	103						60,1	50,1
4.3.50.	37	22300	29,3	14623	233	26,4	24993	20,5	16340	137						60,1	50,1
6.3.50.	44,7	20319	33,5	13363	350	34,6	23884	28	15628	206	29,6	25227	23,2	16492	148	60,1	50,1
8.3.50.						40,3	22820	29	14953	274	32,9	24572	22,9	16068	197	60,1	50,1
1.3.50.											41,3	23913	31,2	15647	246	60,1	50,1

* =Sound pressure indication (LpA) at 3 m distance each air cooler (+/- 2 dB(A)), free field conditions, according EN13487

Capacities

Type DVS-p	4 mm					7 mm					10 mm					4p	6p
	4 poles 1500 min⁻¹ (nom)		6 poles 1000 min⁻¹ (nom)			4 poles 1500 min⁻¹ (nom)		6 poles 1000 min⁻¹ (nom)			4 poles 1500 min⁻¹ (nom)		6 poles 1000 min⁻¹ (nom)				
	DT1 = 8K (SC) air on= 0°C (-8/0)	Air volume	DT1 = 8K (SC) air on= 0°C (-8/0)	Air volume	Surface	DT1 = 8K (SC) air on= 0°C (-8/0)	Air volume	DT1 = 8K (SC) air on= 0°C (-8/0)	Air volume	Surface	DT1 = 8K (SC) air on= 0°C (-8/0)	Air volume	DT1 = 8K (SC) air on= 0°C (-8/0)	Air volume	Surface	LpA @ 3 m (+/- 2 dB(A))	LpA @ 3 m (+/- 2 dB(A))
	kW	m³/h	kW	m³/h	m²	kW	m³/h	kW	m³/h	m²	kW	m³/h	kW	m³/h	m²	dB(A)	dB(A)
3.3.56.	40,3	29374	31,8	19695	243	24,9	31255	23	20939	143						63,9	54,9
4.3.56.	41,2	28294	39,4	18980	324	35,2	30758	28,6	20610	190						63,9	54,9
6.3.56.	55,7	26350	45,5	17692	486	46,7	29758	37,3	19948	285	38,5	30972	30,3	20753	205	63,9	54,9
8.3.56.						55,7	28782	43,5	19302	381	47,2	30378	36,0	20359	274	63,9	54,9
1.3.56.											54,3	29783	40,7	19966	342	63,9	54,9
3.3.63.	51,8	40147	42,9	28514	291	32,4	42597	30,5	30341	171						67,8	55,8
4.3.63.	61,8	38842	52,4	27456	389	45,2	41914	37,4	29862	228						67,8	55,8
6.3.63.	77,9	36548	62,7	25545	583	60,6	40622	49,8	28889	343	49,4	42204	40,5	30070	246	67,8	55,8
8.3.63.						71,4	39427	57,6	27934	457	60,1	41412	49,5	29494	329	67,8	55,8
1.3.63.											70,9	40654	57,0	28914	411	67,8	55,8
3.4.45.	30,4	23488	25,8	15472	181	21,8	25779	17,4	17094	107						58,4	49,4
4.4.45.	37,5	22300	29,9	14635	242	27,2	25144	21,4	16646	142						58,4	49,4
6.4.45.	45,5	20332	34,0	13263	363	35,6	23930	28,5	15786	213	30,0	25416	23,8	16837	153	58,4	49,4
8.4.45.						41,5	22827	30,1	15005	284	34,1	24672	24,2	16312	204	58,4	49,4
1.4.45.											42,2	23960	31,5	15807	256	58,4	49,4
3.4.50.	35,3	31279	33,8	20478	233	28,3	34041	23,4	22255	137						61,1	51,1
4.4.50.	40,1	29727	26,6	19493	311	20,9	33321	29,1	21785	183						61,1	51,1
6.4.50.	59,8	27085	45,5	17813	466	47,9	31842	37,7	20836	274	39,8	33634	30,5	21989	197	61,1	51,1
8.4.50.						56,9	30421	43,7	19933	365	48,6	32758	36,5	21422	263	61,1	51,1
1.4.50.											55,8	31878	42,6	20859	328	61,1	51,1
3.4.56.	55,1	39161	45,0	26257	324	37,7	41670	30,3	27917	190						64,9	55,9
4.4.56.	65,5	37719	51,1	25303	431	44,1	41008	38,1	27479	254						64,9	55,9
6.4.56.	80,1	35126	61,5	23585	647	62,0	39673	47,7	26595	380	49,1	41295	40,0	27669	274	64,9	55,9
8.4.56.						74,2	38370	58,1	25734	507	63,2	40501	48,7	27143	365	64,9	55,9
1.4.56.											71,0	39707	55,7	26618	456	64,9	55,9
3.4.63.	65,9	53524	53,0	38015	388	48,1	56794	40,4	40451	228						68,7	56,7
4.4.63.	77,4	51784	70,2	36602	518	60,5	55882	50	39814	304						68,7	56,7
6.4.63.	104,5	48724	83,9	34054	777	80,5	54158	66,6	38516	456	66,4	56270	54,5	40090	328	68,7	56,7
8.4.63.						95,6	52562	78,6	37240	609	81,9	55211	66,3	39322	438	68,7	56,7
1.4.63.											94,8	54200	75,7	38549	547	68,7	56,7
3.5.50.	51,4	39093	40,3	25595	291	36,0	42548	29,4	27818	171						61,8	51,8
4.5.50.	60,5	37154	45,7	24363	388	39,9	41649	29,2	27228	228						61,8	51,8
6.5.50.	70,3	33850	57,5	22263	582	60,4	39798	46,9	26042	342	49,5	42042	38,7	27485	246	61,8	51,8
8.5.50.						57,4	38021	54,3	24913	456	60,2	40945	46,8	26775	328	61,8	51,8
1.5.50.											69,7	39844	53,3	26072	410	61,8	51,8
3.5.56.	60,0	48948	56,1	32819	404	47,4	52087	38,7	34896	238						65,6	56,6
4.5.56.	82,1	47146	66,0	31627	539	59,3	51258	47,1	34347	317						65,6	56,6
6.5.56.	100,1	43903	77,4	29478	809	78,6	49588	62,5	33243	475	64,5	51616	50,0	34585	342	65,6	56,6
8.5.56.						92,0	47959	70,8	32165	634	75,5	50624	61,0	33927	456	65,6	56,6
1.5.56.											85,9	49630	61,7	33270	570	65,6	56,6
3.5.63.	88,3	66901	74,3	47515	485	57,6	70990	50,8	50563	285						69,4	57,4
4.5.63.	106,2	64725	86,8	45749	647	71,7	69850	63,6	49766	380						69,4	57,4
6.5.63.	129,6	60898	102,3	42563	971	100,7	67695	83,9	48141	570	83,5	70336	67,8	50112	410	69,4	57,4
8.5.63.						121,3	65699	98,5	46546	761	102,7	69012	82,2	49149	547	69,4	57,4
1.5.63.											118,5	67747	94,3	48183	684	69,4	57,4
3.6.50.	59,0	46909	51,0	30711	349	42,7	51058	33,4	33381	205						62,3	52,3
4.6.50.	74,9	44581	59,1	29233	466	53,1	49977	40,9	32674	274						62,3	52,3
6.6.50.	90,2	40616	67,1	26712	699	69,4	47755	56,7	31249	411	59,8	50448	46,5	32980	295	62,3	52,3
8.6.50.						80,5	45621	57,9	29894	548	65,6	49133	54,9	32130	394	62,3	52,3
1.6.50.											82,6	47811	63,0	31285	492	62,3	52,3
3.6.56.	81,4	58735	64,0	39382	485	49,8	62503	46,6	41875	285						66,1	57,1
4.6.56.	52,2	56572	79,5	37950	647	70,9	61509	57,8	41216	380						66,1	57,1
6.6.56.	120,7	52680	92,5	35371	970	94,5	59504	75,2	39890	570	77,6	61938	60,9	41501	410	66,1	57,1
8.6.56.						112,6	57547	87,1	38595	760	94,8	60746	72,0	40712	547	66,1	57,1
1.6.56.											108,6	59554	81,3	39923	684	66,1	57,1
3.6.63.	104,7	80278	86,4	57016	582	72,6	85187	60,8	60675	342						69,9	57,9
4.6.63.	124,6	77666	106	54895	776	91,1	83817	75,3	59716	456						69,9	57,9
6.6.63.	157,7	73073	126,4	51071	1164	121,1	81230	97,5	57767	684	96,3	84400	81,8	60133	492	69,9	57,9
8.6.63.						143,4	78835	116,5	55852	912	121,6	82812	99,8	58979	656	69,9	57,9
1.6.63.											142,4	81293	114,3	57816	821	69,9	57,9

* =Sound pressure indication (LpA) at 3 m distance each air cooler (+/- 2 dB(A)), free field conditions, according EN13487

Goedhart SCP air coolers Cu/Al

Goedhart DVS-i

Capacities

Type DVS-i	4 mm					7 mm					10 mm					4p	6p
	4 poles 1500 min⁻¹ (nom)		6 poles 1000 min⁻¹ (nom)			4 poles 1500 min⁻¹ (nom)		6 poles 1000 min⁻¹ (nom)			4 poles 1500 min⁻¹ (nom)		6 poles 1000 min⁻¹ (nom)				
	DT1 = 8K (SC) air on= 0°C (-8/0)	Air volume	DT1 = 8K (SC) air on= 0°C (-8/0)	Air volume	Surface	DT1 = 8K (SC) air on= 0°C (-8/0)	Air volume	DT1 = 8K (SC) air on= 0°C (-8/0)	Air volume	Surface	DT1 = 8K (SC) air on= 0°C (-8/0)	Air volume	DT1 = 8K (SC) air on= 0°C (-8/0)	Air volume	Surface	LpA @ 3 m (+/- 2 dB(A))	LpA @ 3 m (+/- 2 dB(A))
	kW	m³/h	kW	m³/h	m²	kW	m³/h	kW	m³/h	m²	kW	m³/h	kW	m³/h	m²	dB(A)	dB(A)
3.1.40.	6,1	3168	4,9	2119	29	4,0	3474	3,2	2301	17						53,3	45,3
4.1.40.	7,0	2998	5,5	2021	39	5,1	3394	4,0	2252	23						53,3	45,3
6.1.40.	8,1	2713	6,1	1852	59	6,4	3229	5,,0	2156	35	5,2	3428	4,1	2273	25	53,3	45,3
8.1.40.						7,6	3073	5,7	2066	46	6,4	3331	4,8	2215	33	53,3	45,3
1.1.40.											7,4	3234	5,5	2159	41	53,3	45,3
3.1.45.	10,3	5883	8,2	3876	46	6,8	6451	5,5	4277	27						53,1	44,1
4.1.45.	12,2	5590	9,5	3668	61	8,6	6293	6,7	4167	36						53,1	44,1
6.1.45.	14,4	5099	10,6	3327	91	11,3	5994	8,8	3954	54	9,3	6361	7,2	4214	39	53,1	44,1
8.1.45.						13,1	5720	9,8	3761	72	11,0	6177	8,5	4084	51	53,1	44,1
1.1.45.											12,8	6001	9,4	3959	64	53,1	44,1
3.1.50.	13,5	7832	10,8	5127	59	9,0	8516	7,1	5568	34						56,0	46,0
4.1.50.	15,8	7446	12,3	4882	78	11,3	8337	9,0	5450	46						56,0	46,0
6.1.50.	19	6788	14,1	4464	117	15,0	7971	11,5	5216	69	12,2	8415	9,2	5501	50	56,0	46,0
8.1.50.						17,6	7619	13,2	4992	92	14,8	8199	11	5361	66	56,0	46,0
1.1.50.											17,0	7981	12,6	5221	83	56,0	46,0
3.1.56.	17,9	9800	14,3	6571	81	11,7	10423	9,6	6981	48						59,9	50,9
4.1.56.	21,1	9442	16,4	6334	108	14,3	10258	11,4	6874	64						59,9	50,9
6.1.56.	25,1	8798	18,9	5906	163	19,4	9928	15,2	6654	96	15,7	10329	12,1	6921	69	59,9	50,9
8.1.56.						22,9	9604	17,5	6440	127	19,1	10133	14,6	6791	92	59,9	50,9
1.1.56.											21,8	9935	16,5	6660	115	59,9	50,9
3.1.63.	22,9	13392	19,0	9513	98	15,1	14205	12,6	10118	57						63,7	51,7
4.1.63.	26,9	12960	22,3	9163	130	19,0	13978	15,7	9959	76						63,7	51,7
6.1.63.	33,1	12200	26,0	8528	195	25,1	13550	20,3	9637	115	20,2	14075	16,4	10028	82	63,7	51,7
8.1.63.						29,8	13154	23,9	9321	153	25,0	13812	19,8	9838	110	63,7	51,7
1.1.63.											28,6	13561	22,6	9646	137	63,7	51,7
3.2.40.	12,1	6324	9,7	4234	58	8,0	6942	6,3	4599	34						56,1	48,1
4.2.40.	14,0	5982	10,9	4035	78	10,1	6782	8,0	4501	46						56,1	48,1
6.2.40.	16,2	5411	12,3	3695	117	13,2	6449	10,1	4307	69	10,7	6852	8,2	4543	49	56,1	48,1
8.2.40.						15,2	6133	11,6	4124	92	12,9	6655	9,8	4426	66	56,1	48,1
1.2.40.											14,7	6458	10,9	4312	82	56,1	48,1
3.2.45.	20,5	11752	16,6	7742	91	13,9	12893	11,1	8549	53						55,9	46,9
4.2.45.	24,3	11159	18,9	7324	121	17,2	12577	13,5	8326	71						55,9	46,9
6.2.45.	28,8	10177	21,1	6639	182	22,5	11972	17,6	7898	107	18,6	12712	14,3	8423	77	55,9	46,9
8.2.45.						26	11422	19,6	7508	142	21,9	12342	17	8160	102	55,9	46,9
1.2.45.											25,5	11988	19,2	7909	128	55,9	46,9
3.2.50.	27,0	15647	21,6	10244	117	18,0	17024	14,5	11130	69						58,7	48,7
4.2.50.	31,5	14873	24,5	9752	156	22,6	16665	17,9	10895	91						58,7	48,7
6.2.50.	37,8	13554	28,1	8914	233	29,9	15928	23,0	10423	137	24,4	16822	18,4	10997	99	58,7	48,7
8.2.50.						35,1	15219	26,3	9972	183	29,6	16385	21,9	10715	132	58,7	48,7
1.2.50.											33,9	15947	25,2	10434	164	58,7	48,7
3.2.56.	35,7	19587	28,6	13133	162	23,6	20838	18,8	13960	95						62,5	53,5
4.2.56.	42,2	18869	32,7	12657	216	29,1	20508	23,5	13741	127						62,5	53,5
6.2.56.	50,2	17574	37,7	11799	324	38,6	19842	29,7	13302	190	30,8	20651	24,2	13837	137	62,5	53,5
8.2.56.						45,6	19193	34,9	12872	254	38,2	20254	29,1	13574	183	62,5	53,5
1.2.56.											43,5	19859	33	13313	228	62,5	53,5
3.2.63.	45,1	26770	37,9	19014	194	30,2	28401	25,2	20228	114						66,4	54,4
4.2.63.	53,8	25901	44,5	18309	259	37,9	27946	31,3	19911	152						66,4	54,4
6.2.63.	66,1	24374	51,9	17038	389	50,2	27086	40,9	19263	229	40,7	28140	32,8	20048	164	66,4	54,4
8.2.63.						59,4	26290	47,7	18627	305	49,9	27612	39,6	19665	219	66,4	54,4
1.2.63.											57,3	27107	45,2	19280	274	66,4	54,4
3.3.45.	30,8	17620	24,6	11607	136	20,9	19336	16,7	12822	80						57,4	48,4
4.3.45.	36,0	16730	27,9	10980	181	25,2	18859	20,5	12486	107						57,4	48,4
6.3.45.	42,9	15255	31,9	9952	272	34,1	17952	26,4	11842	160	27,9	19064	21,4	12631	115	57,4	48,4
8.3.45.						39,6	17124	30,2	11257	213	33,9	18507	25,6	12236	153	57,4	48,4
1.3.45.											38,7	17974	28,8	11858	192	57,4	48,4
3.3.50.	40,6	23463	32,4	15360	175	27	25532	21,6	16692	103						60,1	50,1
4.3.50.	47,9	22300	37,2	14623	233	33,6	24993	26	16340	137						60,1	50,1
6.3.50.	56,7	20319	41,8	13363	350	44,2	23884	34,5	15628	206	36,5	25227	27,8	16492	148	60,1	50,1
8.3.50.						51,2	22820	38,6	14953	274	43,1	24572	33,3	16068	197	60,1	50,1
1.3.50.											50,1	23913	37,7	15647	246	60,1	50,1

* =Sound pressure indication (LpA) at 3 m distance each air cooler (+/- 2 dB(A)), free field conditions, according EN13487

Goedhart SCP air coolers Cu/Al

Goedhart DVS-i

Capacities

Type DVS-i	4 mm					7 mm					10 mm					4p	6p
	4 poles 1500 min⁻¹ (nom)		6 poles 1000 min⁻¹ (nom)			4 poles 1500 min⁻¹ (nom)		6 poles 1000 min⁻¹ (nom)			4 poles 1500 min⁻¹ (nom)		6 poles 1000 min⁻¹ (nom)				
	DT1 = 8K (SCI) air on= 0°C (-8/0)	Air volume	DT1 = 8K (SCI) air on= 0°C (-8/0)	Air volume	Surface	DT1 = 8K (SCI) air on= 0°C (-8/0)	Air volume	DT1 = 8K (SCI) air on= 0°C (-8/0)	Air volume	Surface	DT1 = 8K (SCI) air on= 0°C (-8/0)	Air volume	DT1 = 8K (SCI) air on= 0°C (-8/0)	Air volume	Surface	LpA @ 3 m (+/- 2 dB(A))	LpA @ 3 m (+/- 2 dB(A))
	kW	m³/h	kW	m³/h	m²	kW	m³/h	kW	m³/h	m²	kW	m³/h	kW	m³/h	m²	dB(A)	dB(A)
3.3.56.	53,3	29374	42,3	19695	243	35,0	31255	28,6	20939	143						63,9	54,9
4.3.56.	62,9	28294	49,6	18980	324	44,1	30758	35,3	20610	190						63,9	54,9
6.3.56.	75,2	26350	56,5	17692	486	58,2	29758	45,4	19948	285	46,9	30972	36,3	20753	205	63,9	54,9
8.3.56.						68,6	28782	52,1	19302	381	57,1	30378	43,0	20359	274	63,9	54,9
1.3.56.											65,1	29783	48,2	19966	342	63,9	54,9
3.3.63.	68,6	40147	57,0	28514	291	37,7	42597	45,3	30341	171						67,8	55,8
4.3.63.	81,6	38842	66,8	27456	389	46,7	41914	56,8	29862	228						67,8	55,8
6.3.63.	99,1	36548	77,8	25545	583	60,7	40622	75,2	28889	343	60,5	42204	49,2	30070	246	67,8	55,8
8.3.63.						71,1	39427	88,7	27934	457	74,4	41412	59,6	29494	329	67,8	55,8
1.3.63.											85,8	40654	67,8	28914	411	67,8	55,8
3.4.45.	41,3	23488	33,1	15472	181	27,7	25779	22,1	17094	107						58,4	49,4
4.4.45.	48,6	22300	37,8	14635	242	34,4	25144	26,9	16646	142						58,4	49,4
6.4.45.	57,5	20332	42,1	13263	363	44,9	23930	35,2	15786	213	37,2	25416	28,6	16837	153	58,4	49,4
8.4.45.						52,0	22827	39,1	15005	284	43,7	24672	33,9	16312	204	58,4	49,4
1.4.45.											51,0	23960	38,3	15807	256	58,4	49,4
3.4.50.	54,4	31279	43,2	20478	233	36,0	34041	29,0	22255	137						61,1	51,1
4.4.50.	62,9	29727	48,9	19493	311	45,1	33321	35,8	21785	183						61,1	51,1
6.4.50.	75,6	27085	56,2	17813	466	59,7	31842	45,9	20836	274	48,7	33634	36,7	21989	197	61,1	51,1
8.4.50.						70,1	30421	52,5	19933	365	59,1	32758	43,8	21422	263	61,1	51,1
1.4.50.											67,7	31878	50,3	20859	328	61,1	51,1
3.4.56.	70,9	39161	57,3	26257	324	47,1	41670	37,6	27917	190						64,9	55,9
4.4.56.	83,0	37719	65,0	25303	431	58,2	41008	47,0	27479	254						64,9	55,9
6.4.56.	100,3	35126	75,4	23585	647	77,2	39673	60,6	26595	380	62,7	41295	48,3	27669	274	64,9	55,9
8.4.56.						91,2	38370	69,7	25734	507	76,3	40501	58,2	27143	365	64,9	55,9
1.4.56.											87,2	39707	65,9	26618	456	64,9	55,9
3.4.63.	90,7	53524	76,3	38015	388	60,4	56794	50,3	40451	228						68,7	56,7
4.4.63.	108,7	51784	89,1	36602	518	75,7	55882	62,5	39814	304						68,7	56,7
6.4.63.	132,2	48724	103,8	34054	777	100,3	54158	81,8	38516	456	81,4	56270	65,5	40090	328	68,7	56,7
8.4.63.						118,8	52562	95,2	37240	609	99,7	55211	79,1	39322	438	68,7	56,7
1.4.63.											114,6	54200	90,3	38549	547	68,7	56,7
3.5.50.	67,8	39093	53,3	25595	291	45,3	42548	36,2	27818	171						61,8	51,8
4.5.50.	79,4	37154	61,1	24363	388	54,8	41649	44,0	27228	228						61,8	51,8
6.5.50.	93,5	33850	70,4	22263	582	74,7	39798	57,1	26042	342	60,5	42042	46,5	27485	246	61,8	51,8
8.5.50.						85,8	38021	65,9	24913	456	73,9	40945	55,8	26775	328	61,8	51,8
1.5.50.											84,6	39844	62,9	26072	410	61,8	51,8
3.5.56.	89,7	48948	71,3	32819	404	58,7	52087	47,6	34896	238						65,6	56,6
4.5.56.	105,4	47146	81,7	31627	539	71,4	51258	57,0	34347	317						65,6	56,6
6.5.56.	124,3	43903	94,0	29478	809	97,0	49588	75,6	33243	475	78,2	51616	60,4	34585	342	65,6	56,6
8.5.56.						111,2	47959	86,4	32165	634	94,4	50624	72,8	33927	456	65,6	56,6
1.5.56.											108,6	49630	82,3	33270	570	65,6	56,6
3.5.63.	115,3	66901	95,6	47515	485	75,0	70990	63,2	50563	285						69,4	57,4
4.5.63.	137,1	64725	111,0	45749	647	94,2	69850	78,5	49766	380						69,4	57,4
6.5.63.	165,1	60898	127,8	42563	971	125,4	67695	102,4	48141	570	101,8	70336	81,5	50112	410	69,4	57,4
8.5.63.						149,2	65699	118,9	46546	761	124,4	69012	99,1	49149	547	69,4	57,4
1.5.63.											142,7	67747	112,9	48183	684	69,4	57,4
3.6.50.	81,8	46909	64,9	30711	349	53,9	51058	43,3	33381	205						62,3	52,3
4.6.50.	96,3	44581	74,4	29233	466	67,2	49977	52,0	32674	274						62,3	52,3
6.6.50.	113,4	40616	83,6	26712	699	88,7	47755	69,0	31249	411	73,0	50448	55,6	32980	295	62,3	52,3
8.6.50.						102,3	45621	77,2	29894	548	86,3	49133	66,6	32130	394	62,3	52,3
1.6.50.											99,3	47811	75,4	31285	492	62,3	52,3
3.6.56.	106,8	58735	86,1	39382	485	70,6	62503	56,4	41875	285						66,1	57,1
4.6.56.	126,5	56572	99,2	37950	647	88,1	61509	69,3	41216	380						66,1	57,1
6.6.56.	150,4	52680	113,0	35371	970	115,6	59504	90,4	39890	570	93,6	61938	72,6	41501	410	66,1	57,1
8.6.56.						134,9	57547	101,8	38595	760	110,7	60746	86,1	40712	547	66,1	57,1
1.6.56.											126,9	59554	97,9	39923	684	66,1	57,1
3.6.63.	136,6	80278	114,8	57016	582	90,7	85187	75,5	60675	342						69,9	57,9
4.6.63.	163,6	77666	133,9	54895	776	113,6	83817	93,4	59716	456						69,9	57,9
6.6.63.	198,8	73073	155,6	51071	1164	150,4	81230	121,3	57767	684	121	84400	98,4	60133	492	69,9	57,9
8.6.63.						177,4	78835	142	55852	912	148,7	82812	119,2	58979	656	69,9	57,9
1.6.63.											171,5	81293	135,5	57816	821	69,9	57,9

* =Sound pressure indication (LpA) at 3 m distance each air cooler (+/- 2 dB(A)), free field conditions, according EN13487

Drawing

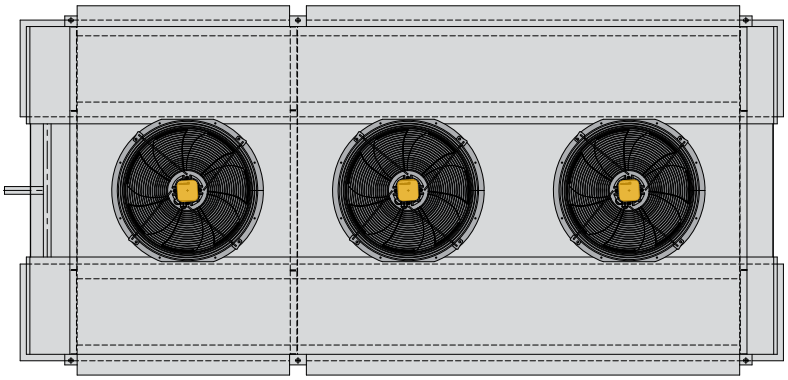

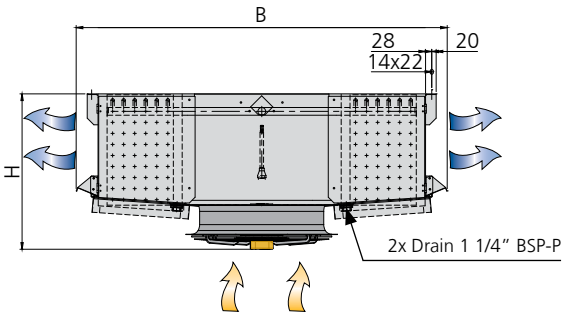

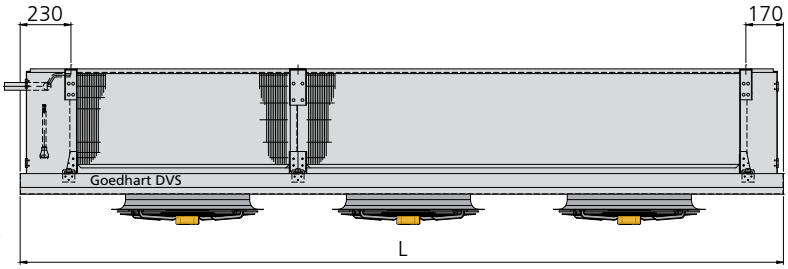

Attention!



The fans are mounted to the outside of the air cooler. The fans are as standard not wired on a junction box to the connection side. Wiring is available against an extra price.

The dimensions in the tables are external dimensions of the heat exchanger. Measures such as suspension points, but also internal volume [dm3], other conditions, refrigerants, coolants and materials are available in the Goedhart GPC selection program. Goedhart GPC is free to download from www.goedhart.eu

Goedhart SCP air coolers Cu/Al

Goedhart DVS -p en DVS-i

Dimensions

Type DVS	Dimensions			Weight		
	L	B	H	4 mm	7 mm	10 mm
	mm	mm	mm	kg	kg	kg
3.1.40.*	1056	1220	420	97	93	
4.1.40.*	1056	1320	420	108	102	
6.1.40.*	1056	1520	420	129	119	114
8.1.40.*	1056	1720	420		137	133
1.1.40.*	1056	1920	420			148
3.1.45.*	1156	1270	590	111	104	
4.1.45.*	1156	1370	590	123	115	
6.1.45.*	1156	1570	590	148	135	131
8.1.45.*	1156	1770	590		157	149
1.1.45.*	1156	1970	590			169
3.1.50.*	1356	1320	590	147	138	
4.1.50.*	1356	1420	590	164	150	
6.1.50.*	1356	1620	590	199	179	171
8.1.50.*	1356	1820	590		207	196
1.1.50.*	1356	2020	590			222
3.1.56.*	1456	1380	705	177	163	
4.1.56.*	1456	1480	705	198	181	
6.1.56.*	1456	1680	705	243	216	204
8.1.56.*	1456	1880	705		251	235
1.1.56.*	1456	2080	705			267
3.1.63.*	1456	1450	835	204	189	
4.1.63.*	1456	1550	835	229	208	
6.1.63.*	1456	1750	835	280	247	234
8.1.63.*	1456	1950	835		289	271
1.1.63.*	1456	2150	835			306
3.2.40.*	1656	1220	420	151	142	
4.2.40.*	1656	1320	420	168	155	
6.2.40.*	1656	1520	420	205	185	177
8.2.40.*	1656	1720	420		214	204
1.2.40.*	1656	1920	420			231
3.2.45.*	1856	1270	590	170	157	
4.2.45.*	1856	1370	590	192	174	
6.2.45.4	1856	1570	590	236	210	199
8.2.45.*	1856	1770	590		244	231
1.2.45.*	1856	1970	590			263
3.2.50.*	2256	1320	590	244	225	
4.2.50.*	2256	1420	590	286	250	
6.2.50.*	2256	1620	590	338	299	283
8.2.50.*	2256	1820	590		348	327
1.2.50*	2256	2020	590			370
3.2.56.*	2456	1380	705	296	268	
4.2.56.*	2456	1480	705	336	299	
6.2.56.*	2456	1680	705	418	362	340
8.2.56.*	2456	1880	705		425	395
1.2.56.*	2456	2080	705			451
3.2.63.*	2456	1450	835	345	313	
4.2.63.*	2456	1550	835	392	349	
6.2.63.*	2456	1750	835	486	420	393
8.2.63.*	2456	1950	835		493	458
1.2.63.*	2456	2150	835			522
3.3.45.*	2556	1270	590	231	212	
4.3.45.*	2556	1370	590	263	236	
6.3.45.*	2556	1570	590	325	286	270
8.3.45.*	2556	1770	590		335	314
1.3.45.*	2556	1970	590			357
3.3.50.*	3156	1320	590	343	313	
4.3.50.*	3156	1420	590	389	349	
6.3.50.*	3156	1620	590	478	419	395
8.3.50.*	3156	1820	590		490	459
1.3.50.*	3156	2020	590			521
3.3.56.*	3456	1380	705	430	391	
4.3.56.*	3456	1480	705	485	426	
6.3.56.*	3456	1680	705	605	517	484
8.3.56.*	3456	1880	705		609	564
1.3.56.*	3456	2080	705			646
3.3.63.*	3456	1450	835	508	453	
4.3.63.*	3456	1550	835	571	506	
6.3.63.*	3456	1750	835	709	610	565
8.3.63.*	3456	1950	835		718	658
1.3.63.*	3456	2150	835			749

Type DVS	Dimensions			Weight		
	L	B	H	4 mm	7 mm	10 mm
	mm	mm	mm	kg	kg	kg
3.4.45.*	3256	1270	590	294	268	
4.4.45.*	3256	1370	590	335	309	
6.4.45.*	3256	1570	590	414	362	341
8.4.45.*	2856	1770	590		426	397
1.4.45.*	3256	1970	590			456
3.4.50.*	4056	1320	590	450	406	
4.4.50.*	4056	1420	590	513	451	
6.4.50.*	4056	1620	590	628	543	512
8.4.50.*	4056	1820	590		634	592
1.4.50.*	4056	2020	590			673
3.4.56.*	4456	1380	705	548	494	
4.4.56.*	4456	1480	705	622	549	
6.4.56.*	4456	1680	705	783	668	624
8.4.56.*	4456	1880	705		787	729
1.4.56.*	4456	2080	705			825
3.4.63.*	4456	1450	835	647	582	
4.4.63.*	4456	1550	835	736	649	
6.4.63.*	4456	1750	835	917	779	726
8.4.63.*	4456	1950	835		917	847
1.4.63.*	4456	2150	835			964
3.5.50.*	4956	1320	590	553	499	
4.5.50.*	4956	1420	590	627	552	
6.5.50.*	4956	1620	590	768	669	624
8.5.50.*	4956	1820	590		776	723
1.5.50.*	4956	2020	590			824
3.5.56.*	5456	1380	705	669	602	
4.5.56.*	5456	1480	705	772	670	
6.5.56.*	5456	1680	705	958	822	767
8.5.56.*	5456	1880	705		962	889
1.5.56.*	5456	2080	705			1020
3.5.63.*	5456	1450	835	788	708	
4.5.63.*	5456	1550	835	901	793	
6.5.63.*	5456	1750	835	1124	960	894
8.5.63.*	5456	1950	835		1131	1043
1.5.63.*	5456	2150	835			1181
3.6.50.*	5856	1320	590	651	588	
4.6.50.*	5856	1420	590	738	659	
6.6.50.*	5856	1620	590	914	787	740
8.6.50.*	5856	1820	590		918	854
1.6.50.*	5856	2020	590			975
3.6.56.*	6456	1380	705	794	713	
4.6.56.*	6456	1480	705	915	806	
6.6.56.*	6456	1680	705	1139	974	909
8.6.56.*	6456	1880	705		1143	1055
1.6.56.*	6456	2080	705			1207
3.6.63.*	6456	1450	835	937	839	
4.6.63.*	6456	1550	835	1069	939	
6.6.63.*	6456	1750	835	1336	1139	1059
8.6.63.*	6456	1950	835		1341	1236
1.6.63.*	6456	2150	835			1403



Goedhart BC50/BC50XF air coolers
Blast freezing

The Goedhart BC50/BC50XF blast freezers are a range of floor mounted air coolers specially designed for quick freezing of food products with a best performance due to special tubes. The Goedhart BC50/BC50XF is a high-quality Goedhart aircooler with a lot of possible optional extras.

The Goedhart BC50/BC50XF air coolers are very suitable for the use in 'large scale kitchens' (ready-to-serve meals). Besides this it can be used for quick freezing of bakery products, meat, fish, poultry, milk products and the production of ice cream. The working temperature is usually between -10°C and -30°C. The air cooler design is optimized for the use in confined spaces.

The process of quick freezing is very important to minimize the weight loss and conserving the qualities of the food product. The nutritional value is maintained, as well as the original taste. The fans on our Goedhart BC50/BC50XF air coolers have respectively standard 50 and 100 Pa external pressure available to enable the quick freezing process.

Coil block

Tube distance : 50x50 mm straight
Fin spacing : 7, 10 en 12mm
Material : 15mm o.d internaly plain (p) or enhanced (i) copper tubes
: aluminium HT-fins

Goedhart BC50 coil blocks have copper tubes mechanically expanded into fully collared aluminium fins. A good thermal contact is achieved by expansion of the tubes into the fin collars, that are also utilised as spacers to provide a constant distance between the fins. All coolers are pressure tested to 30 bar (lower by cooling mediums) and are supplied with a light over pressure charge of dried air. Suitable for all known refrigerants and coolants, with the exception of NH3.



Staggered fin spacings

Casing

- Construction for floor / ceiling mounting
- Casing material of galvanized sheet steel (epoxy spray finishing RAL 9003 optional)
- Standard refrigerant connections are positioned on the left hand side of the unit when looking with the direction of the airflow.
- Possible defrost by hot gas spiral or electric defrost elements will be fixed to the bottom side of the coil.
- Stainless steel fasteners



Hinged fan plates

Goedhart BC50/BC50XF features

- Blastfreezer
- Suitable for floor or ceiling mounting
- Available with internally plain or enhanced copper tubes
- Blow-through or draw-through execution possible
- Consisting of 24 models
- Capacity range from 14,3 to 105,5kW.
- Suitable for most refrigerants / coolants with exception of NH_3
- Many options and accessories available (see p. 48)



Goedhart SCP air coolers Cu/Al

Goedhart BC50-p / BC50XF -p en BC50-i / BC50XF -i

Goedhart BC50 / BC50XF - Air coolers



1	2	3	4			
BC50	XF	i	6	4	63	7
				5	6	7

1. Range : BC50
2. Externe druk : = 50Pa XF=100Pa
3. Tube execution : p = internally plain
   i = internally enhanced
4. Number of rows deep : 6, 8
5. Number of fans : 2, 4, 6
6. Fan diameter : 630, 630XF
7. Fin spacing : 7, 10, 12

Goedhart BC50/BC50XF - Fan information

Fan diameter	Tension	Δ			Y			Δ	Y	Δ			
		Speed	Nominal power	FLC	Speed	Nominal power	FLC	Sound power indication each fan LwA (+/-2dB(A))		Speed	Nominal power	FLC	Sound power indication each fan LwA (+/-2dB(A))
mm	V	min^{-1}	Watt	A	min^{-1}	Watt	A	dB(A)	dB(A)	min^{-1}	Watt	A	dB(A)
Three phase - 50Hz										**Three phase - 60Hz**			
630	3x400/690	1360	1500	2,70	1100	1100	1,80	88	83	1640	2900	4,60	**
630XF*	3x230/400				1455	2200	4,80	-	94				
630	3x400/690	900	620	1,25	720	440	0,72	73	67	1040	1000	1,55	**

** Ask your Goedhart contact for the sound power indication

Goedhart SCP air coolers Cu/Al

Goedhart BC50-p

Capacities 50 Pa external pressure

Type BC50-p	DT1 (R404A)									
	7 mm			10 mm			12 mm			
	DT1 = 8K (SC3) air on= -18°C (-25/-18)	Air volume 50 Pa externe druk	Surface	DT1 = 8K (SC3) air on= -18°C (-25/-18)	Air volume 50 Pa externe druk	Surface	DT1 = 8K (SC3) air on= -18°C (-25/-18)	Air volume 50 Pa externe druk	Surface	LpA @ 3 m (+/- 2 dB(A))
	kW	m³/h	m²	kW	m³/h	m²	kW	m³/h	m²	dB(A)
6.2.63.	23,6	23790	172	20,1	25372	124	18,9	25988	105	66,2
8.2.63.	28,4	22689	229							66,2
6.4.63.	47,1	47538	343	40,1	50713	247	37,7	51951	209	68,8
8.4.63.	56,8	45329	457							68,8
6.6.63.	70,7	71286	514	60,1	76055	370	56,5	77916	314	70,3
8.6.63.	85,1	67969	685							70,3

* = Sound pressure indication (LpA) at 3 m distance each air cooler (+/- 2 dB(A)) , free field conditions, according EN13487

Goedhart SCP air coolers Cu/Al

Goedhart BC50XF-p

Capacities 100 Pa external pressure

Type BC50XF-p	DT1 (R404A)									
	7 mm			10 mm			12 mm			
	DT1 = 8K (SC3) air on= -18°C (-25/-18)	Air volume 50 Pa externe druk	Surface	DT1 = 8K (SC3) air on= -18°C (-25/-18)	Air volume 50 Pa externe druk	Surface	DT1 = 8K (SC3) air on= -18°C (-25/-18)	Air volume 50 Pa externe druk	Surface	LpA @ 3 m (+/- 2 dB(A))
	kW	m³/h	m²	kW	m³/h	m²	kW	m³/h	m²	dB(A)
6.2.63.	22,9	22396	172	19,4	23886	124	18,3	24465	105	74,1
8.2.63.	27,5	21354	229							74,1
6.4.63.	45,8	44753	343	38,8	47745	247	36,4	48906	209	76,7
8.4.63.	54,9	42664	457							76,7
6.6.63.	68,7	67110	514	58,1	71602	370	54,8	73348	314	78,1
8.6.63.	82,3	63972	685							78,1

* = Sound pressure indication (LpA) at 3 m distance each air cooler (+/- 2 dB(A)) , free field conditions, according EN13487

Goedhart SCP air coolers Cu/Al

Goedhart BC50-i

Capacities 50 Pa external pressure

Type BC50-i	DT1 (R404A)									
	7 mm			10 mm			12 mm			
	DT1 = 8K (SCT) air on= -18°C (-25/-18)	Air volume 50 Pa externe druk	Surface	DT1 = 8K (SCT) air on= -18°C (-25/-18)	Air volume 50 Pa externe druk	Surface	DT1 = 8K (SCT) air on= -18°C (-25/-18)	Air volume 50 Pa externe druk	Surface	LpA @ 3 m (+/- 2 dB(A))
	kW	m³/h	m²	kW	m³/h	m²	kW	m³/h	m²	dB(A)
6.2.63.	31,0	23790	172	25,5	25372	124	23,8	25988	105	66,2
8.2.63.	36,5	22689	229							66,2
6.4.63.	61,8	47538	343	51,0	50713	247	47,5	51951	209	68,8
8.4.63.	72,9	45329	457							68,8
6.6.63.	92,7	71286	514	76,5	76055	370	71,3	77916	314	70,3
8.6.63.	109,3	67969	685							70,3

* = Sound pressure indication (LpA) at 3 m distance each air cooler (+/- 2 dB(A)) , free field conditions, according EN13487

Goedhart SCP air coolers Cu/Al

Goedhart BC50XF-i

Capacities 100 Pa external pressure

Type BC50XF-i	DT1 (R404A)									
	7 mm			10 mm			12 mm			
	DT1 = 8K (SCT) air on= -18°C (-25/-18)	Air volume 50 Pa externe druk	Surface	DT1 = 8K (SCT) air on= -18°C (-25/-18)	Air volume 50 Pa externe druk	Surface	DT1 = 8K (SCT) air on= -18°C (-25/-18)	Air volume 50 Pa externe druk	Surface	LpA @ 3 m (+/- 2 dB(A))
	kW	m³/h	m²	kW	m³/h	m²	kW	m³/h	m²	dB(A)
6.2.63.	29,9	22396	172	24,6	23886	124	22,9	24465	105	74,1
8.2.63.	35,1	21354	229							74,1
6.4.63.	59,7	44753	343	49,1	47745	247	45,8	48906	209	76,7
8.4.63.	70,1	42664	457							76,7
6.6.63.	89,6	67110	514	73,6	71602	370	68,7	73348	314	78,1
8.6.63.	105,1	63972	685							78,1

* = Sound pressure indication (LpA) at 3 m distance each air cooler (+/- 2 dB(A)) , free field conditions, according EN13487

Goedhart SCP air coolers Cu/Al

Goedhart BC50-p en BC50-i

Drawing

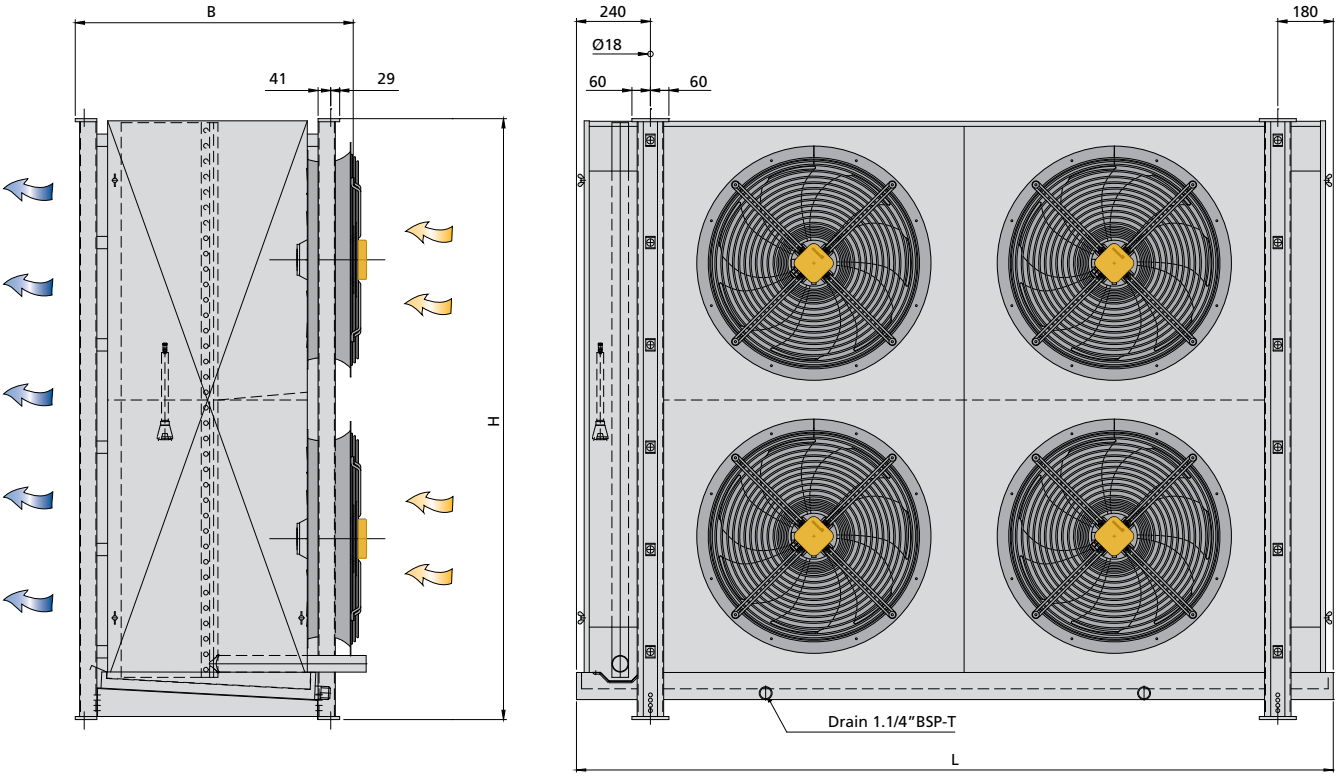

Goedhart SCP air coolers Cu/Al

Goedhart BC50XF-p en BC50XF-i

Drawing

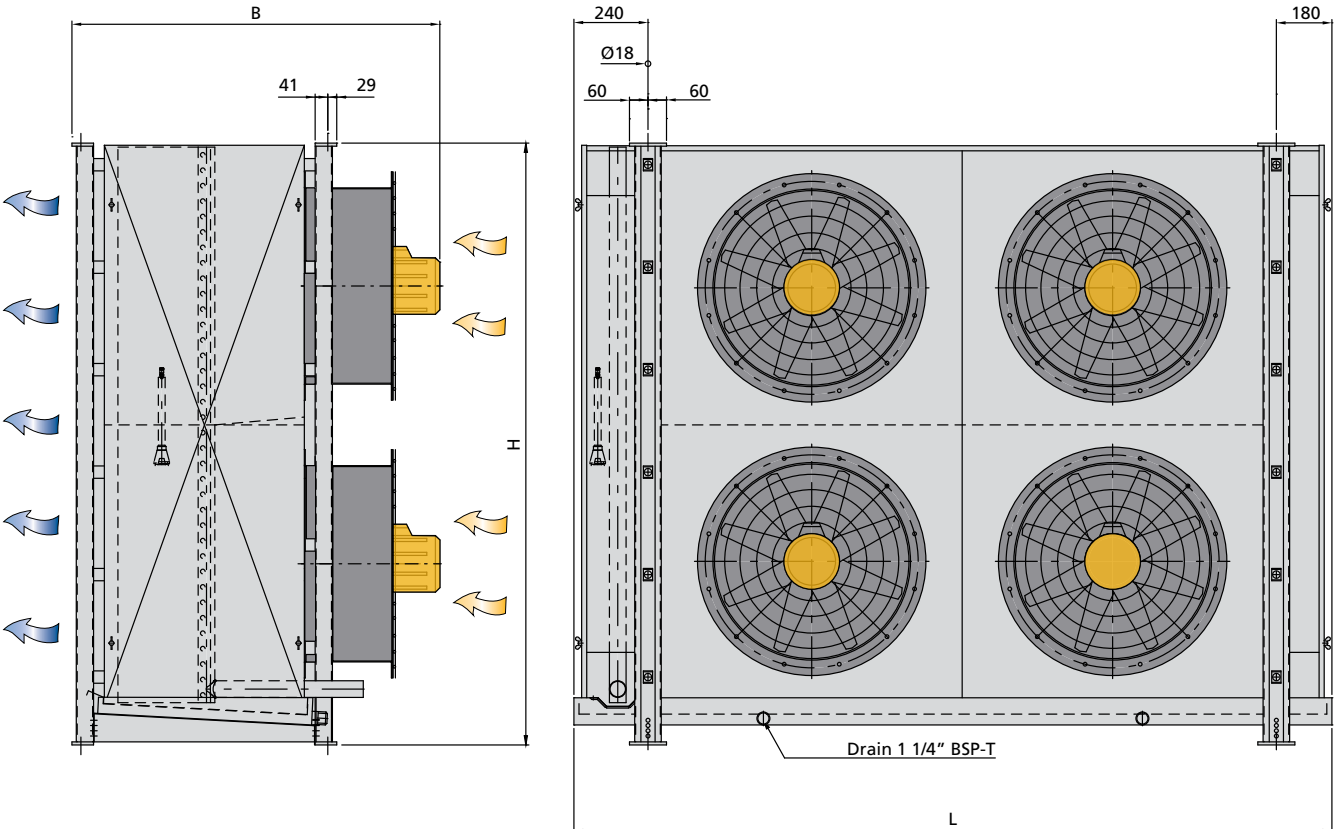

Goedhart SCP air coolers Cu/Al

Goedhart BC50-p en BC50-i

Dimensions

Type	Dimensions			Weight (empty)		
	L	B	H	7 mm	10 mm	12 mm
BC50-i	**mm**	**mm**	**mm**	**kg**	**kg**	**kg**
6.2.63.	1456	902	1950	338	319	318
8.2.63.	1456	1002	1950	386		
6.4.63.	2456	902	1950	568	529	529
8.4.63.	2456	1002	1950	635		
6.6.63.	3456	902	1950	794	737	736
8.6.63.	3456	1002	1950	925		

Goedhart SCP air coolers Cu/Al

Goedhart BC50XF-p en BC50XF-i

Dimensions

Type	Dimensions			Weight (empty)		
	L	B	H	7 mm	10 mm	12 mm
BC50XF-i	**mm**	**mm**	**mm**	**kg**	**kg**	**kg**
6.2.63.	1456	1192	1950	362	343	342
8.2.63.	1456	1292	1950	410		
6.4.63.	2456	1192	1950	616	577	577
8.4.63.	2456	1292	1950	684		
6.6.63.	3456	1192	1950	866	809	808
8.6.63.	3456	1292	1950	997		

The dimensions in the tables are external dimensions of the heat exchanger. Measures such as suspension points, but also internal volum^{e} [dm3], other conditions, refrigerants, coolants and materials are available in the Goedhart GPC selection program. Goedhart GPC is free to download from www.goedhart.eu

Accessoiries / Options

Accessories					
	VCI	**VCe**	**VNS**	**DVS**	**BC50**
Blow-through	X	X	X	X	X
Draw-through	X	X			
Internally plain tube	X	X	X	X	X
Internally enhanced tube	X	X		X	X
Electrical defrost	X	X	X	X	X
Hotgas defrost	X	X	X	X	X
Water defrost	X	X	X	X	X
Integrated secundair defrost circuit	X	X			X
anti-condensation heating driptray	X	X	X	X	X
Fan heating	X	X	X	X	X
Hinged fans	X	X		X	
Hinged drip tray	X	X		X	
Insulated driptray	X	X		X	X
Insulated fan plates				X	
Polyester drip tray	X	X		X	X
Sock connection*	X	X			
Sock connection with air straigtner*	X	X			
Defrost sock *	X	X			
Diffusor	X	X			X
Diffusor with air operated damper	X	X			X
Options					
Insulation disks	X	X	X	X	X
Feet for floor mounting	X	X	X	X	
Suction hood over fan	X	X			
Suction hood fin side *	X	X			
Fans 60Hz	X	X	X	X	X
Fans EC	X	X	X	X	X
Fans 1x230V	X		X	X	X
Coolants	X	X	X	X	X
Pump system	X	X	X	X	X
CO_2	X	X	X	X	X
Other casing material	X	X	X	X	X
Other fin spacings	X	X	X	X	X
Fins Almg	X	X	X	X	X
Fins Goldlack	X	X	X	X	X

*= Only draw-through air coolers

Defrost system

For room temperatures where ice-build up can be expected and where the coil can not be defrosted by the room air, electric or hot gas defrost is necessary. Also water defrost is available

Electrical defrost
On request Goedhart SCP air coolers Cu/Al can be provided with electrical defrost. A distinction can be made here between heavy defrost loads for low temperatures and light defrost load for higher temperatures (room temperature approximately 0 °C). The stainless steel heating elements are fitted in the coil block within aluminium tubes, which forms a highly conductive medium between the heaters and the fins. In the drip tray heater elements are fitted to the underside of the aluminium inner tray. The elements are rated for 220/240 V and are connected (IP55) for 380/415 V (with neutral) supply. The heater elements in the coil block are removable from the bend side, whilst the tray heater elements can be removed once the outer tray has been removed.

The exact number of elements and electrical power for light and heavy defrost each air cooler, you can find in our Goedhart GPC selection program.

Heating section
The air cooler can be carried out with a heating section with electric heating elements to heat up again dehumidified air The heating section is compared to the air flow placed after the coil block. The heating elements can be placed with holders against the coil block or completely integrated in the casing

Hot gas defrost
The coil block is as standard suited for hot gas defrost (hot gas supply through the suction header). Against an extra price the drip tray can be provided with a copper hot gas spiral. This is enclosed in aluminium profiles that are rigidly secured to the under side of the aluminium inner drip tray. As a result, a very good heat transfer is realized. As with electric defrost a distinction is made with light defrost (room temperature around 0 ° C) and heavy defrost.

Water defrost
On top of the coil block a removable water defrost tray is mounted. The height of the water defrost tray is 80 mm, which increases the total height of the air cooler. The standard discharge head of the water in the water defrost tray is 25 mm, the maximum speed in the water supply line is 5m / sec. For an optimal functioning of the water defrost, the temperature of the defrost water must be between + 15 ° C and at + 30 ° C. The water defrost tray is executed with handles, easy for disassemble and cleaning



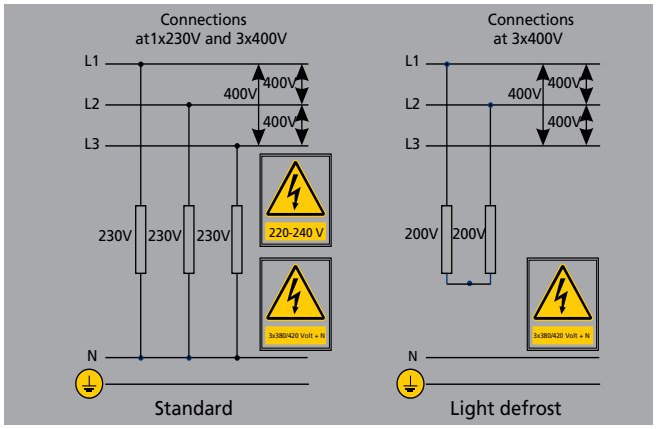



Goedhart SCP air coolers Cu/Al

Accessoiries / Options

Fan heating

The fan fan heating prevents ice build-up between the fan impeller and fan bellmouth during the defrost cycle. This prevent damaging of the fan.

Delivery
- Is mounted and connected to a junction box
- Can also be retrofitted

Fan diameter	Power 230V
mm	kW
400	0,50
450	0,31
500	0,31
560	0,48
630	0,48
710	0,48
800	0,63

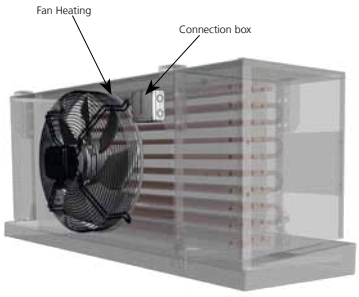

Execution 400 mm fan

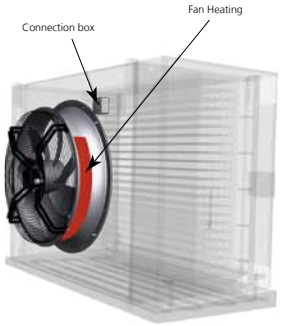

Execution other fan diameters

Prepared for textile hoses:

With textile/PVC air hoses, the air flow can be optimized
- Applications in work and production
- Sensitive refrigerated products (eg flowers, cheese ripening)

Advantages:
By using air hoses a very even distribution of air at low air speed is possible.
- Lower absenteeism through draft-free workplaces
- Optimal climate for sensitive products
- No condensation, because of the breathable fabric no dew point exceedance occurs.



Goedhart VCI-Z / VCe-Z	
Fan diameter	Connection
mm	mm
400	450
450	500
500	550
560	637
630	637
710	716
800	817

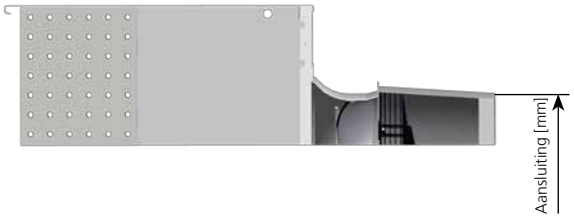

Attention!!
When selecting the air cooler, you need to take pressure loss into account.

Defrost socks (draw-through air coolers)

The defrost socks may be used at draw-through air coolers and optimizes defrosting in particular freezing applications.
In the cooling phase and activated fans, the defrost sock is inflated. In the defrost phase, when the fans are turned off, the defrost sock close the the fan hole and supports the defrost process of the coil block.

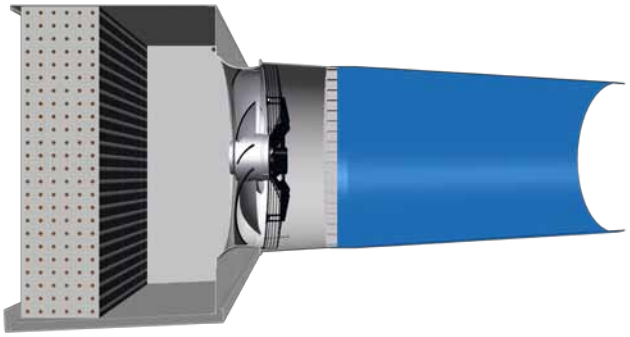

Execution
Suitable for food industry, 100% polyester endless fiber, washable at 40 ° C, suitable for temperatures -60 to 110 ° C, very flexible, Fire resistance E (EN13501-1: 2003), double stitched, tear resistant.

Advantage:
The defrost sock prevent draw in the air cooler during the defrost process. The heat remains in the air cooler and ensures that the defrosting time is considerably shortened.

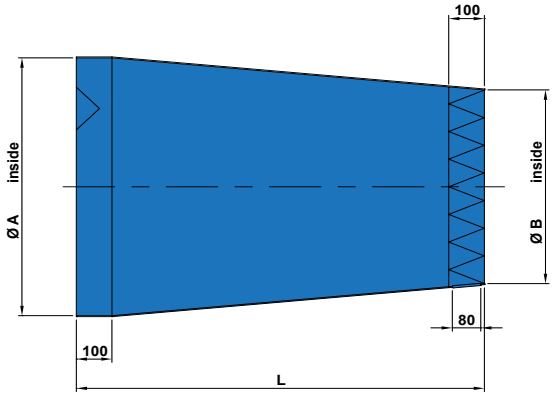

Goedhart VCI-Z / VCe-Z				
Fan diameter	C onnection	A	B	L
mm	mm	mm	mm	mm
400	450	465	340	685
450	500	515	380	760
500	550	565	425	835
560	637	650	480	925
630	637	650	540	1030
710	716	720	595	1135
800	817	820	680	1285

Suction hood (draw-through air coolers)

The suction hood is applied when used for freezing applications from -18 ° C. It supports the alternate defrost fot the air cooler in the freezing room. The suction hood is carried out with 13 mm insulation.

- The suction hood is equal to the casing Material of the air cooler.
- Suction hood is supplied separately and is easy to assemble

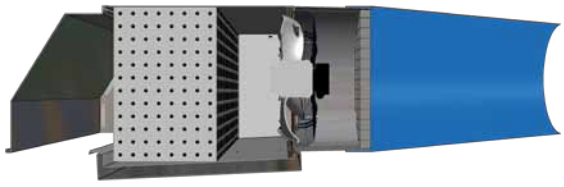

Advantages (in combination with a defrost sock)
The defrost sock and suction hood prevent draw in the air cooler during defrosting. The heat remains on this way in the cooler and that means:

- Shorten the defrosting time by over 50%
- Significant energy savings
- No frost formation on the ceiling of the room and to the products with minimum vapor formation

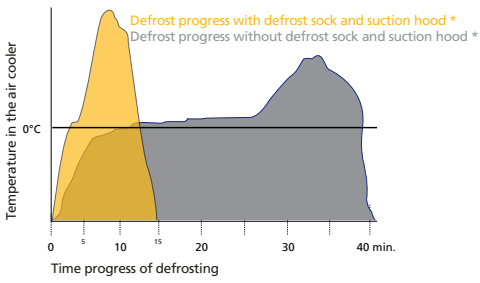

Note:
Due to extra external pressure, the air volume and the capacity of the air cooler changes:

- When using a defrost sock the air volume is reduced with -10% and the capacity with -5%.
- When using a defrost sock and suction hood the air volume is reduced with -20% and the capacity with -10%.
- Per fan is 1 defrost sock is needed. Defrost socks are delivered assembled.

Diffusor with air operated damper (blow-through air coolers)

The diffusor with air opereted damper may be used at blow-through air coolers and optimizes defrosting in particular freezing applications. In the cooling phase and activated fans, the air operated damper is blown open. In the defrost phase, when the fans are turned off, the air operated damper close the the fin side of the coil block and supports the defrost process of the coil block.

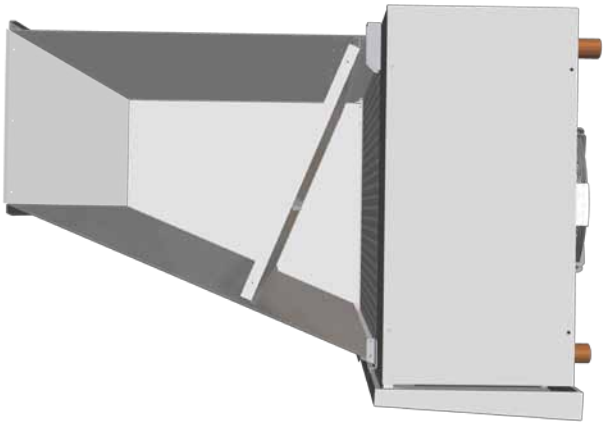

Execution
The Goedhart damper is air operated and has few mechanical parts. The damper is delivered in open possition to prevent damage during transport.

Advantage:
The diffusor with air operated damper prevent draw in the air cooler during the defrost process. The heat remains in the air cooler and ensures that the defrosting time is considerably shortened. In addition, the diffusor provides improved air throw.

Suction hood over the fans (blow-through air coolers)

The suction hood over the fans is applied when used for freezing applications from -18 ° C. It supports the alternate defrost fot the air cooler in the freezing room. It is possible to execute the suction with 13 mm insulation.

- The material of the suction hood is equal to the casing material of the air cooler.
- Suction hood is supplied separately and is easy to assemble

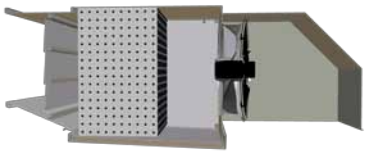

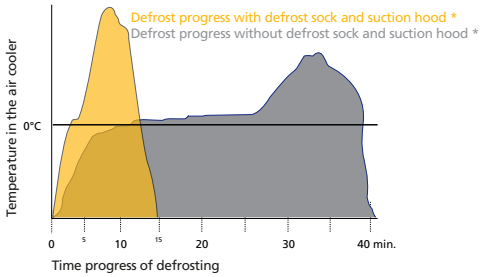

Advantages (in combination with a diffor with damper)
The diffusor with damper and suction hood prevent draw in the air cooler during defrosting. The heat remains on this way in the cooler and that means:

- Shorten the defrosting time by over 50%
- Significant energy savings
- No frost formation on the ceiling of the room and to the products with minimum vapor formation

Note:
Due to extra external pressure, the air volume and the capacity of the air cooler changes:

- When using a diffusor with damper the air volume is reduced with -10% and the capacity with -5%.
- When using a diffusor with damper and suction hood over the fans the air volume is reduced with -20% and the capacity with -10%.

GEA Goedhart air coolers for every application

For Contractors and Original Equipment Manufacturers (OEM) related to the industrial refrigeration industry, GEA Goedhart B.V. offers an unlimited range of air coolers and air cooled condensers in several configurations.

Depending on the application, the optimum configuration will be selected in close cooperation with our customers.



Pressure Equipment Directive (P.E.D)

All aircoolers produced by GEA Goedhart comply with the Pressure Equipment Directive 97/23/EC. PED certificates can be downloaded from www.goedhart.nl.

Lifting instructions

Lifting instructions are supplied with every product. Lifting and moving heat exchangers must be carried out by skilled personnel. Safety must always be assured. Contact GEA Goedhart B.V. if in doubt about any lifting or moving instruction.

These instructions must always be followed in order to guarantee safety and to prevent any damage occurring to our product.

Heat exchangers mounted on a wooden frame can be unloaded by a forklift truck. When doing so, stacked heat exchangers may only be lifted off one at a time. A crane can also be used for unloading by positioning slings under the wooden frame.

Heat exchangers with transport legs must be unloaded using a crane with a balancer (see lifting instructions).





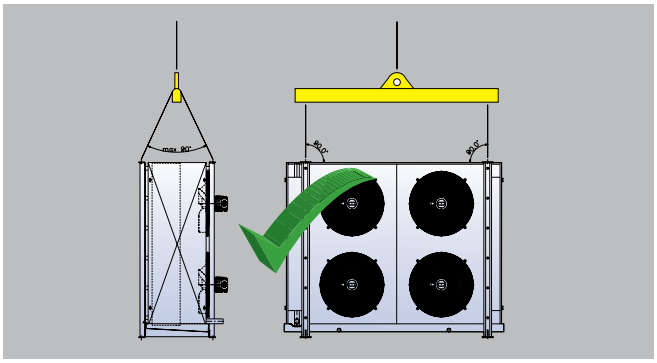

CHANGING
GEA HEAT EXCHANGERS

GEA Goedhart B.V.

Nijverheidsweg 6, 4695 RC Sint Maartensdijk
The Netherlands
Phone +31 (0)166 665 665, Fax+31 (0)166 663 698
www.brand-change.com/www.goedhart.eu / www.goedhart.nl,
info.goedhart.nl@gea.com

GEA Heat Exchangers s.a. / GEA Goedhart systems

Kostomlátecká 180, 288 26 Nymburk
Czech Republic
Phone +420 325 519 951, Fax+420 325 519 952
www.brand-change.com / www.goedhart.cz,
goedhart.cz@gea.com

© GEA Goedhart B.V. All rights reserved
Version: 03.02.1.017.dok - 2015-06. Subject to modification.