CHANGING
GEA HEAT EXCHANGERS

Mounting Guide

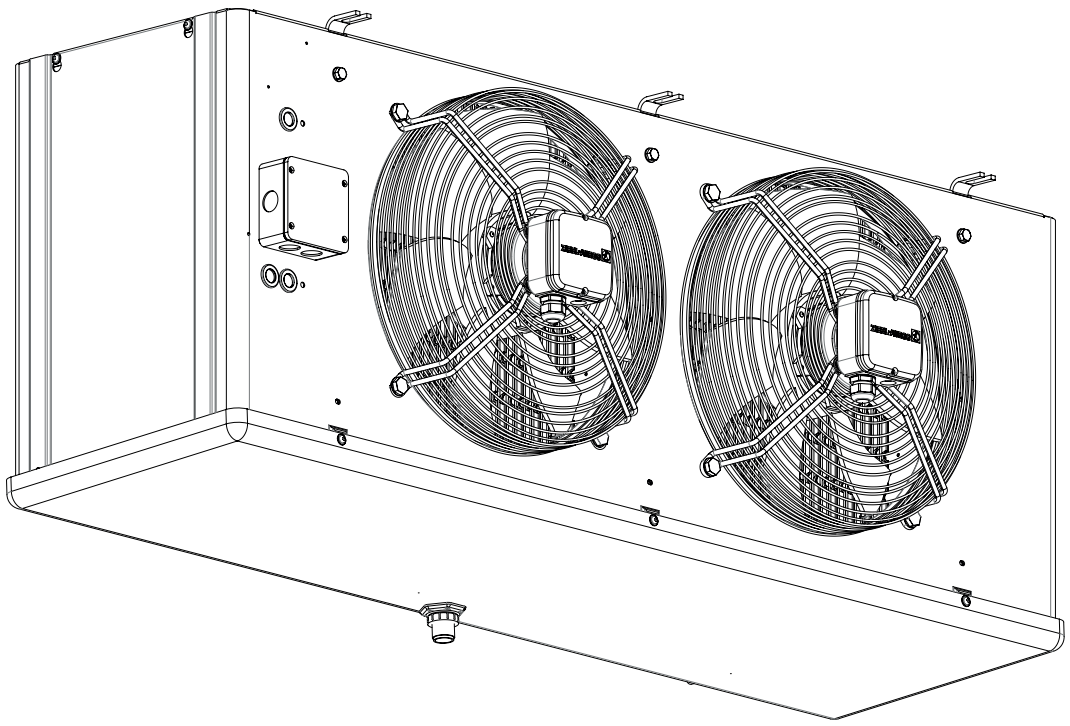

Küba SG *commercial classic*

Mounting Guide
Page 2-4

- Dimensions
- Weights
- Assembly

Electrical wiring
Page 5-23

- Motor wiring diagram
- Electrical defrosting wiring diagram
- Cabling

SG classic

Dimensions

Weights

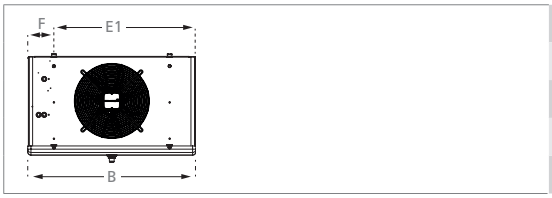

Type	H ±5	B ±5	T ±5	L ±5	F ±3
SG	mm	mm	mm	mm	mm
SGBE 021 D	360	565	429	345	93
SGBE 041 D	460	665	451	345	93
SGBE 061 D	560	815	538	415	143
SGBE 071 D	560	915	618	495	143
SGBE 081 D	560	1.065	618	495	143
SGBE 022 D	360	1.015	429	345	143
SGBE 042 D	460	1.215	451	345	143
SGBE 062 D	560	1.375	538	415	173
SGBE 072 D	560	1.575	618	495	173
SGBE 082 D	560	1.875	618	495	173

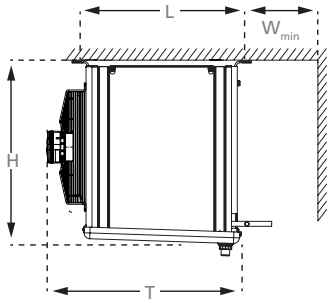

Type	E1 ±5	E2 ±5	Wmin	Gewicht	
SG	mm	mm	mm	kg netto	kg brutto
SGBE 021 D	380	-	200	14	16
SGBE 041 D	480	-	200	21	23
SGBE 061 D	530	-	300	34	39
SGBE 071 D	630	-	300	42	53
SGBE 081 D	780	-	300	54	65
SGBE 022 D	730	365	200	26	36
SGBE 042 D	930	465	200	41	63
SGBE 062 D	1.030	515	300	65	90
SGBE 072 D	1.230	615	300	82	113
SGBE 082 D	1.530	765	300	106	139

Assembly

1

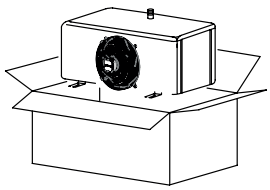

SGBE 021 D
SGBE 041 D
SGBE 061 D

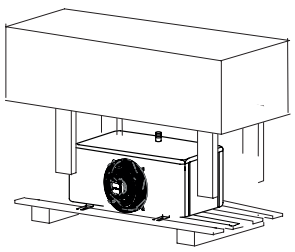

SGBE 071 D
SGBE 081 D

SGBE 022 D

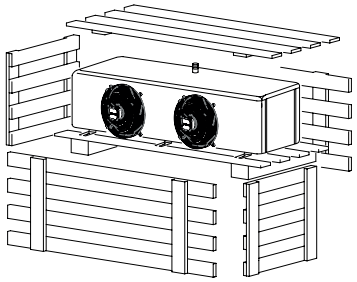

SGBE 042 D
SGBE 062 D
SGBE 072 D
SGBE 082 D

Assembly

2

2.1

2.2

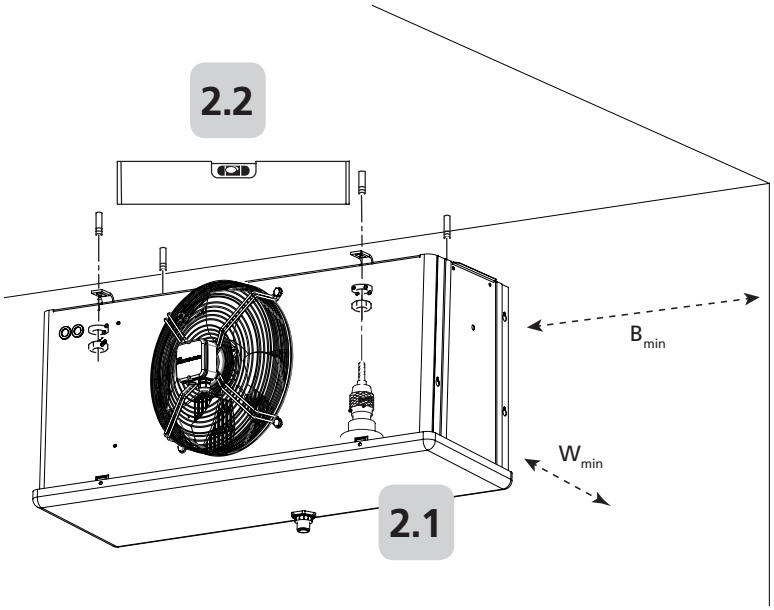

SG	[mm]	
	B_{min}	W_{min}
SGBE 021 D	450	200
SGBE 041 D	550	200
SGBE 061 D	600	300
SGBE 071 D	700	300
SGBE 081 D	850	300
SGBE 022 D	800	200
SGBE 042 D	1000	200
SGBE 062 D	1100	300
SGBE 072 D	1300	300
SGBE 082 D	1600	300

B_{min}= Distance Revision Heater

3

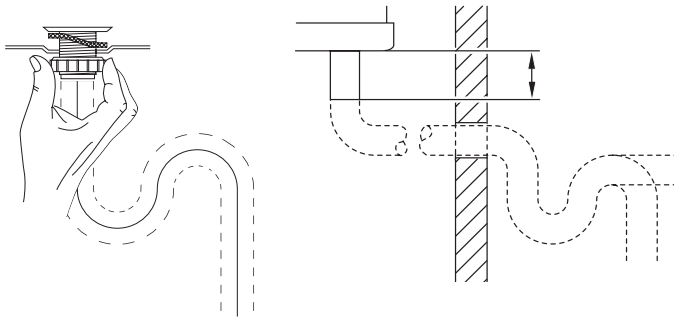

SG	
SGBE 021 D	G ¾''
SGBE 041 D	G ¾''
SGBE 061 D	G ¾''
SGBE 071 D	G ¾''
SGBE 081 D	G ¾''

SG	
SGBE 022 D	G ¾''
SGBE 042 D	G ¾''
SGBE 062 D	G ¾''
SGBE 072 D	G ¾''
SGBE 082 D	G 1¼''

4

4.1

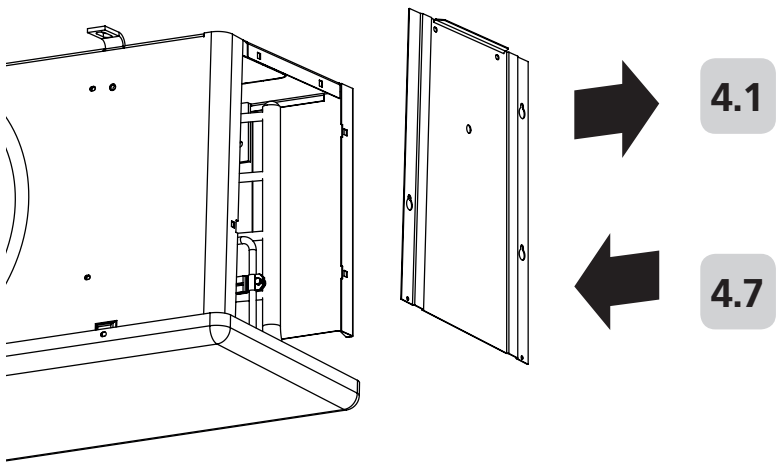

Assembly

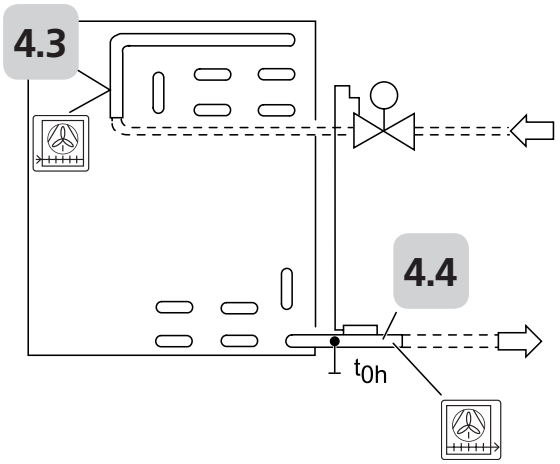

SG	ø mm	ø mm
SGBE 021 D	12	15
SGBE 041 D	12	15
SGBE 061 D	12	22
SGBE 071 D	15	28
SGBE 081 D	15	28

SG	ø mm	ø mm
SGBE 022 D	12	15
SGBE 042 D	12	22
SGBE 062 D	15	28
SGBE 072 D	15	35
SGBE 082 D	15	35

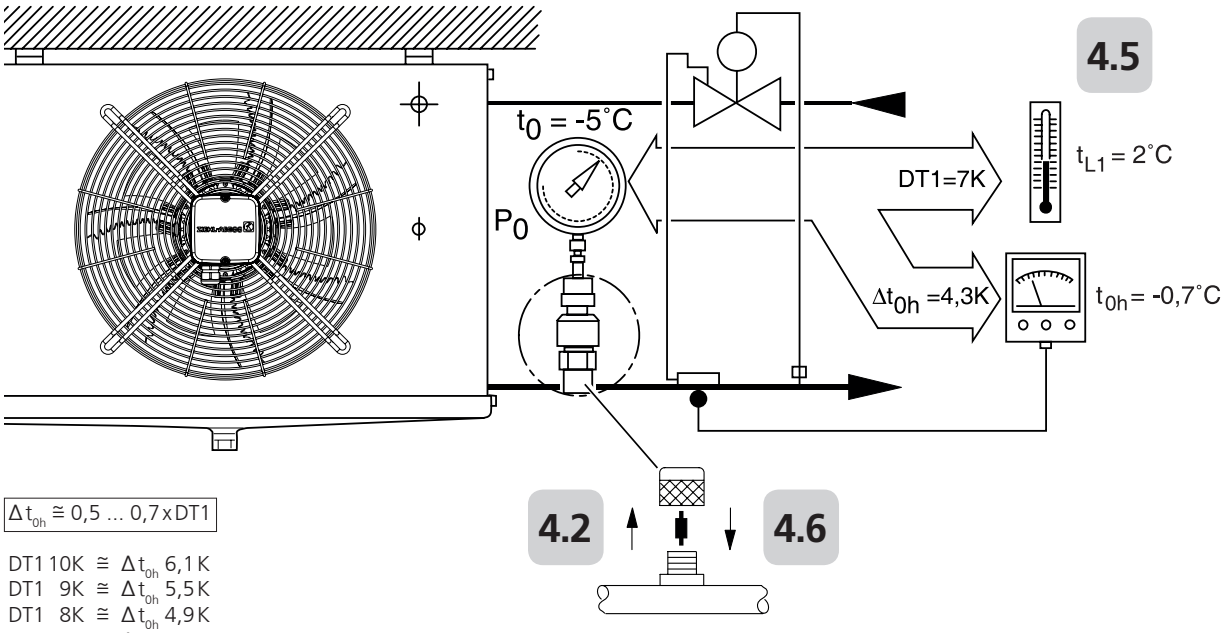

$\Delta t_{0h} \cong 0{,}5 \ldots 0{,}7 \times DT1$

DT1 10K ≅ Δt_{0h} 6,1 K
DT1 9K ≅ Δt_{0h} 5,5 K
DT1 8K ≅ Δt_{0h} 4,9 K
DT1 7K ≅ Δt_{0h} 4,3 K
DT1 6K ≅ Δt_{0h} 3,7 K
DT1 5K ≅ Δt_{0h} 3,1 K
DT1 4K ≅ Δt_{0h} 2,5 K

Electrical wiring

GEA Küba Blue Line

Aircoolers

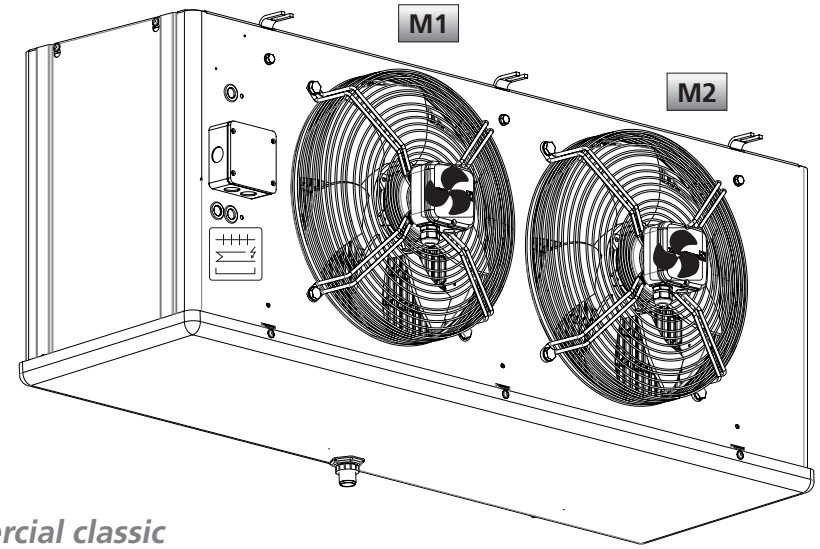

Küba SG *commercial classic*

Motor

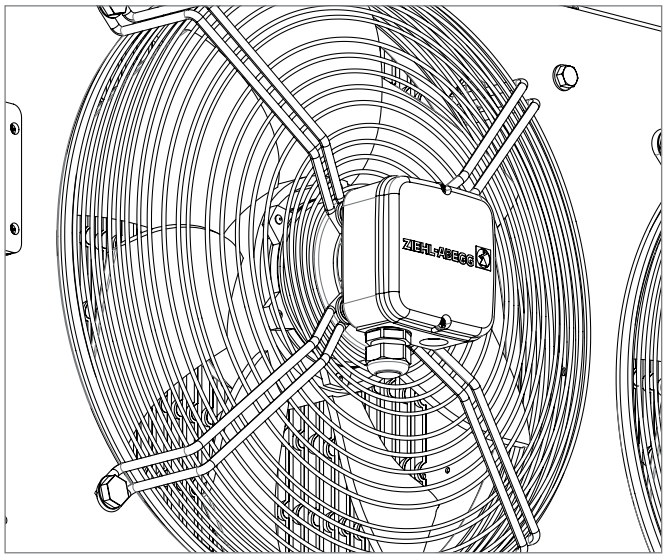

Electrical wiring

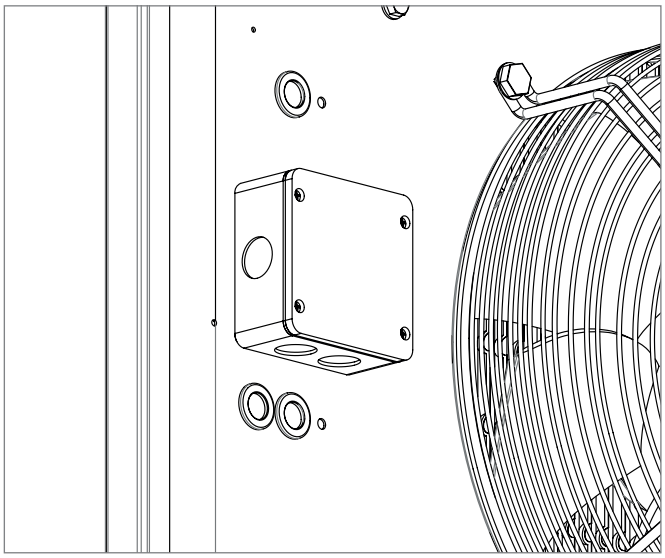

SG classic

Motor wiring diagram

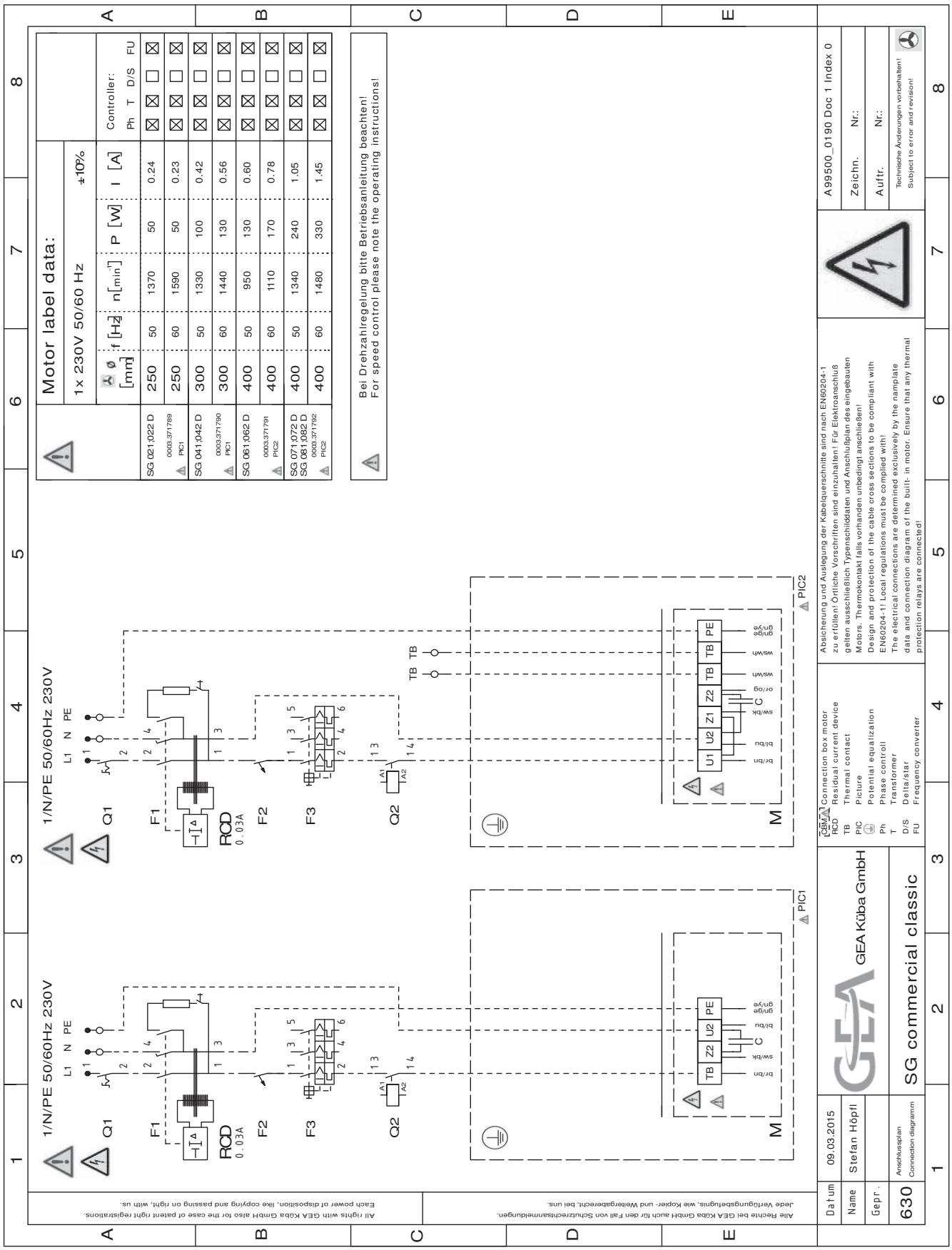

Electrical defrost wiring diagram

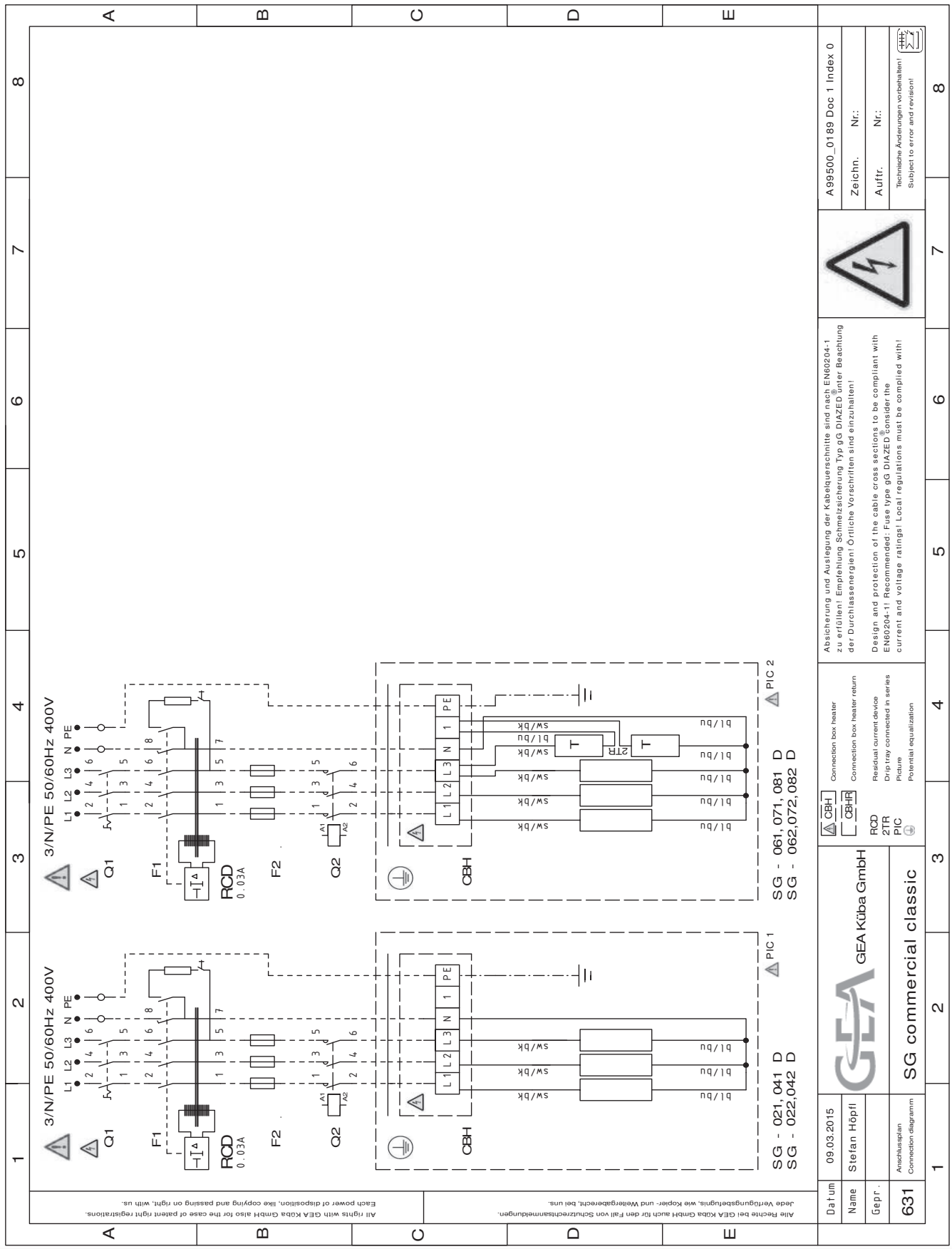

Cabling

SG *commercial classic*

Standard/Series **Wiring diagram number: A99500_0981** (Doc 2; Index 0)																
Type		Coil heating bar (KÖ)				Drip tray heating bar (D)									**L1**	
SGBE.D	Finned length	Number	Length	Capacity P	Form	Number	Length	Capacity P	Form	Total capacity of all heating circuits	Total number of all heating circuits	Heating circuit no.	**PIC on the wiring diagram**	No. of heating element, coil KÖ	No. of heating element, drip tray D	No. of heating element, drip tray D (R)
Type	L [mm]	KÖ [pcs]	L [mm]	P [W]		TW [pcs]	L [mm]	P [W]		P [kW]	[pcs]	[Nb]		[pcs]	[pcs]	[pcs]
SGBE.D	Finned length															
021 D	350	2	1100	385	U150	1	1100	385	U200	1,2	1	CBH1	1	1		
041 D	450	2	1350	480	U200	1	1200	420	U200	1,4	1	CBH1	1	1		
061 D	500	3	1500	535	U150/L50	2	1350	480	U100	1,8	1	CBH1	2	1		
071 D	600	3	1600	575	U150	2	1600	575	U150	2,0	1	CBH1	2	1		
081 D	750	3	2000	725	U200	2	1900	690	U150	2,5	1	CBH1	2	1		
022 D	700	2	1900	690	U150	1	1900	690	U200	2,1	1	CBH1	1	1		
042 D	900	2	2250	860	U200	1	2100	765	U200	2,5	1	CBH1	1	1		
062 D	1000	3	2400	880	U150	2	2400	880	U100	3,1	1	CBH1	2	1		
072 D	1200	3	2800	1035	U150	2	2800	1035	U150	3,6	1	CBH1	2	1		
082 D	1500	3	3500	1300	U200	2	3500	1300	U150	4,6	1	CBH1	2	1		

	CBH connection box Heater Heating circuit												CBHR connection box Heater return Heating circuit return			
L2			L3													
No. of heating element, coil KÖ	No. of heating element, drip tray D	No. of heating element, drip tray D (R)	No. of heating element, coil KÖ	No. of heating element, drip tray D	No. of heating element, drip tray D (R)	Total capacity of heating circuit P	Current L1	Current L2	Current L3	Recom-mended cable cross-section for supply line (building-side)	SKS	Junction box conn. box with earthing cable	Heating circuit no.	Junction box connection box	Minimum cable cross-section for return	Cable length for parts list
[pcs]	[pcs]	[pcs]	[pcs]	[pcs]	[pcs]	P [kW]	I [A]	I [A]	I [A]	min [mm²]	[Size]	CBH	[Nb]	CBHR	min [mm²]	[m]
1				1T		1,2	1,7	1,7	1,7	2,50	3	WK 060				
1				1T		1,4	2,1	2,1	1,8	2,50	3	WK 060				
1			1		2 T(R)	1,8	2,3	2,3	3,4	2,50	3	WK 060				
1			1		2 T(R)	2,0	2,5	2,5	3,8	2,50	2	WK 060				
1			1		2 T(R)	2,5	3,2	3,2	4,7	2,50	3	WK 060				
1				1T		2,1	3,0	3,0	3,0	2,50	3	WK 060				
1				1T		2,5	3,7	3,7	3,3	2,50	3	WK 060				
1			1		2 T(R)	3,1	3,8	3,8	5,7	2,50	3	WK 060				
1			1		2 T(R)	3,6	4,5	4,5	6,8	2,50	2	WK 060				
1			1		2 T(R)	4,6	5,7	5,7	8,5	2,50	3	WK 060				

GEA Küba GmbH

Kühler Weg 1 · 82065 Baierbrunn · Germany
Tel.: +49 89 / 744 73 - 0 · Fax: +49 89 / 744 73 - 107
kueba@gea.com · www.kueba.com

© Copyright 2015 Küba GmbH · 0001.392152 · Status as of 03/2015
Technical modifications reserved