CHANGING
GEA HEAT EXCHANGERS

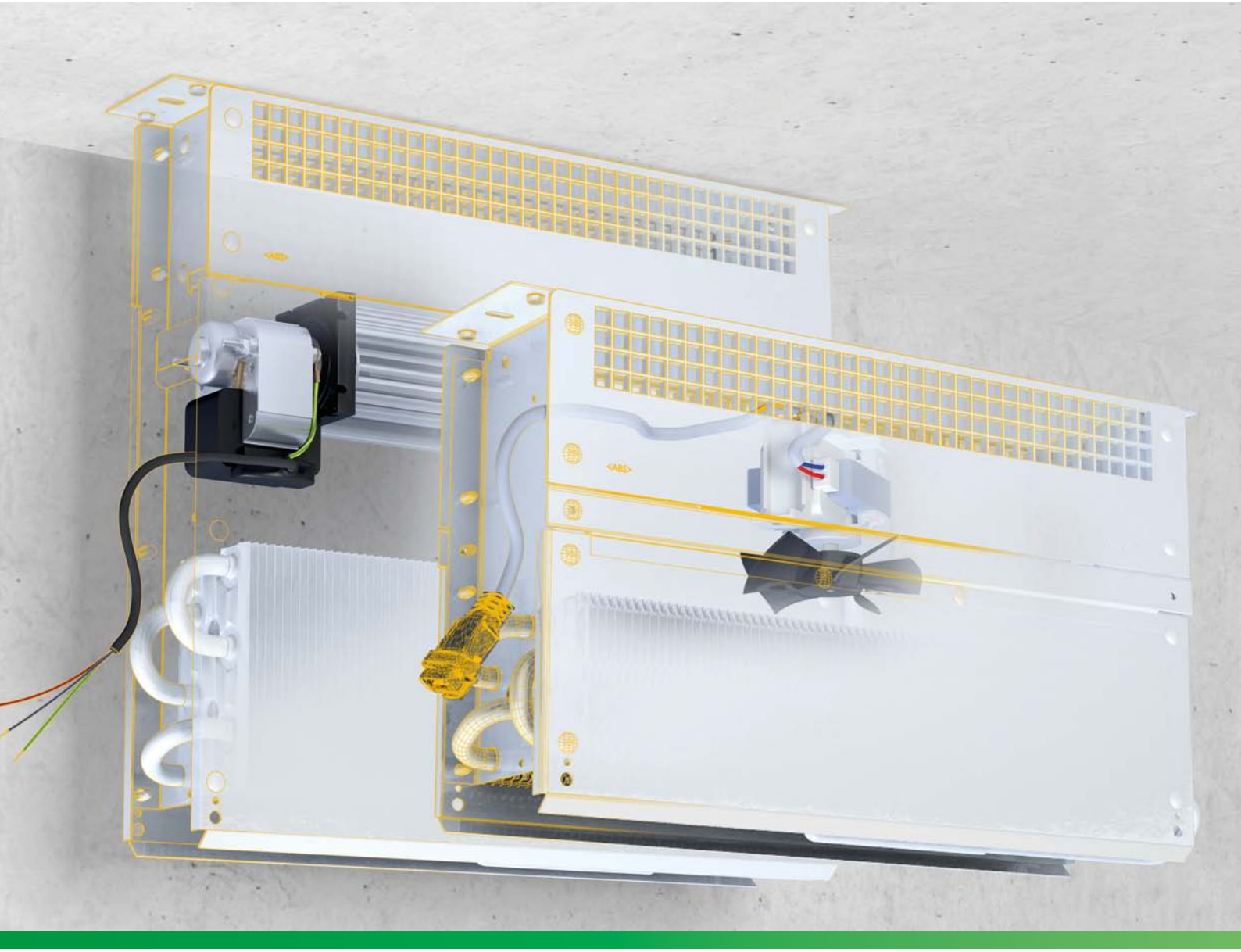

Küba *gastro slim* FM & Küba *gastro* FM

Fresh coldness in refrigerated counters and refrigeration units in gastronomy

Küba *gastro* FM & Küba *gastro slim* FM

Fresh coldness in refrigerated counters and refrigeration units in gastronomy







Air discharge on top or on the side

Optimal air flow



Easy to clean

Type designation code

1	2	3	4	5	6
FM	O	A	02	2	D

FM(O)A 8xx D = Küba *gastro slim* FM

FM(O)A 0xx D = Küba *gastro* FM

1 Model range designation

2 Fin spacing

3 Electric defrost

4 Size

5 Number of fans

6 Generation Code

Küba made in GERMANY

ErP ready

Küba *gastro* FM



Capacity range (t_{L1} ± 5 °C; DT1 = 10K)

0.1 kW  0.3 kW

Temperature range (t_{L1})



Number of fans

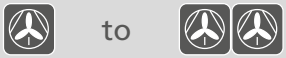 to

Content

Application benefits for contractors and operators 4
Basic version 6
Technical data – FM(O)A 8
Dimensions, weights, ... 8
Accessories 10
Variants 11

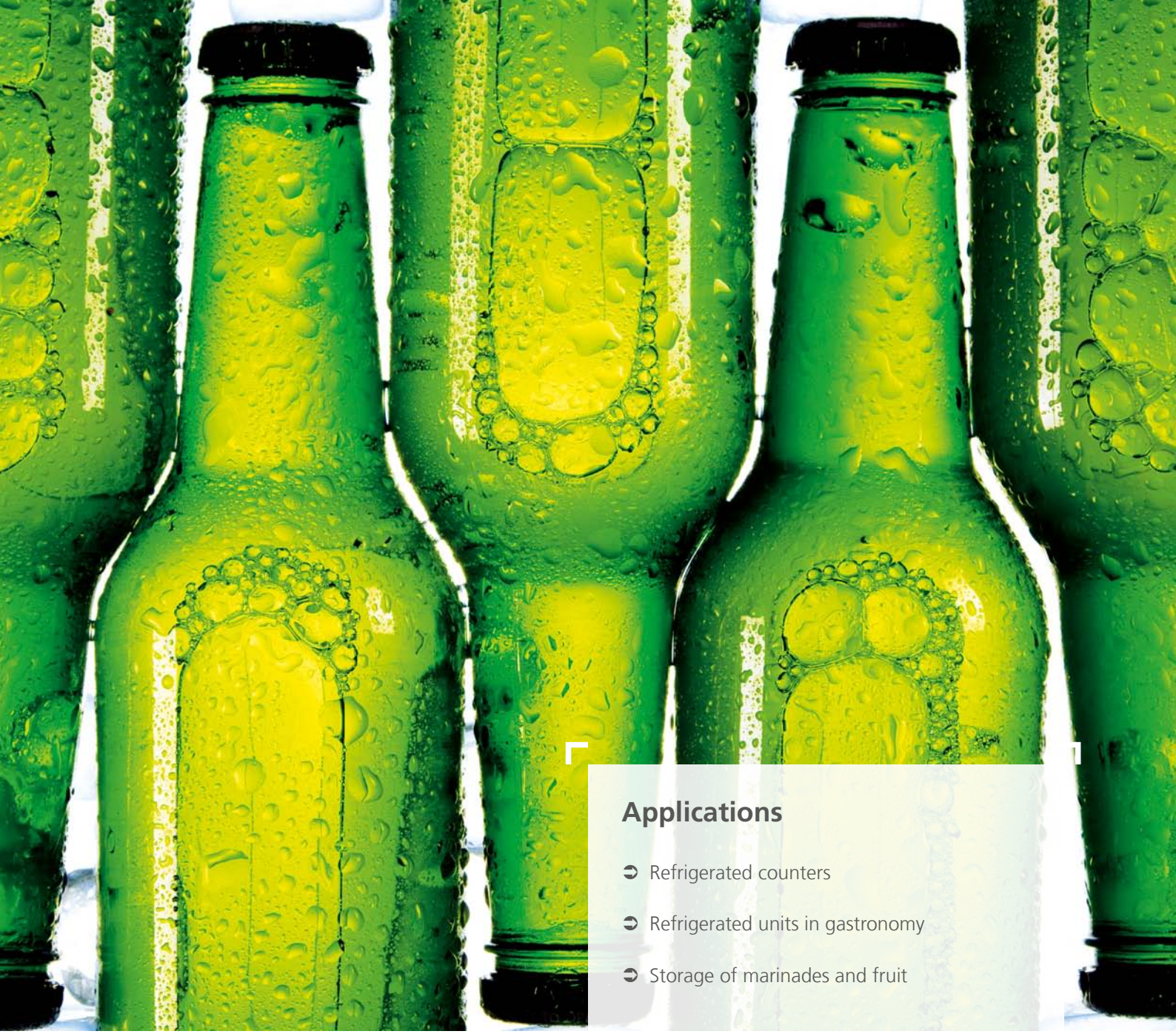

Applications

- Refrigerated counters
- Refrigerated units in gastronomy
- Storage of marinades and fruit

Küba *gastro* FM

Application benefits for contractors and operators

Stringent regulations apply to food, not only during production but also during supply and when in storage.

Whether in a dining area or canteen kitchen – beverages, cooking ingredients, salad dressings or ice cream etc. must always be stored in cold and hygienically perfect conditions.

To ensure beverages are refreshing for guests to enjoy, the bottles or vats in the beverage counters are generally kept at a temperature of +6 °C. Cooking ingredients, however, often demand temperatures between +2 °C and -20 °C.

In both cases, the decisive criterion is the storage temperature which must be maintained at the required value, with the humidity of secondary importance.

The cooling requirements especially in the gastronomic sector are extremely demanding. High ambient temperatures and doors which are opened and closed often pose great challenges to the refrigeration systems. Highly efficient heat transfer and optimal air flow in refrigerated cabinets are therefore decisive in terms of effectiveness and assured cooling.

Küba *gastro* FM & Küba *gastro slim* FM

from the Küba Green Line production range

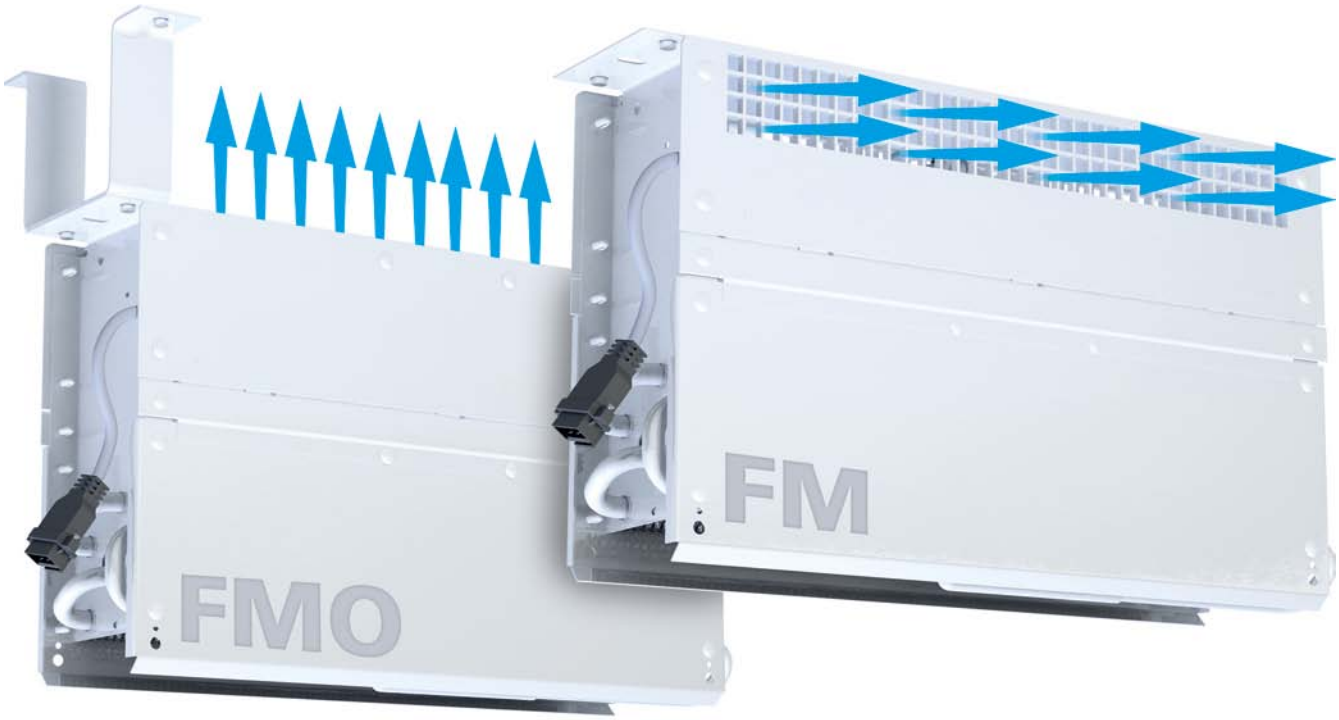

Small, yet powerful, the *gastro* FM is the obvious choice for refrigerated counters, serving bars and refrigerated tables in these rough operating conditions.

The *gastro* FM may be fitted either on the sidewall, discharging air to one side only, or behind the centre strut, discharging to both sides. Horizontal or vertical air discharge options are also available, depending on the fittings in the refrigerated cabinet. The patented air equaliser will ensure that the temperature in the refrigerated cabinet is always distributed evenly, considerably reducing cooling times.

Later addition of electrical defrosting for temperatures down to -30°C requires only minimal effort.

Since the gastro FM is fully powder coated to a high-quality and food safe finish, it is suited even for open or acidic goods such as marinades, etc. All the components of the casing may be dismantled and cleaned in a washer to ensure fast and labour-saving cleaning.

Accessories:
The plastic drip tray is suitable for units mounted in the centre (behind the centre strut).
The aluminium drip tray is the correct choice for units mounted on the sidewall.

The Küba *gastro slim* FM

With an installed width of only 75 mm the Küba *gastro slim* FM can fit behind center columns in most, if not all, cooling counters.

The *gastro slim* FM is available in 3 model sizes and with cooling duty ranging from 0.11 to 0.23 kW.

The coolers have been optimized to meet the diverse requirements of the developing CO_2 system designs up to 60Bar.



Küba *gastro* FM & Küba *gastro slim* FM

Basic version



Casing

- Aluminium, glatt
- Hochwertige Pulverbeschichtung, papyrusweiß RAL 9018
- Lebensmittelecht
- Leicht zu reinigen
- Bester kantenumschließender Korrosionsschutz
- Seitenteile abnehmbar
- Alle Teile spülmaschinenfest
- **FMA (seitlich beidseitig ausblasend) mit Luftgleichrichter**
  Durch beiligende Abdeckplatte auf einseitig ausblasend umrüstbar
- **FMOA (oben beidseitig ausblasend)**
  Durch steckbares Kiemengitter auf einseitig ausblasend umrüstbar

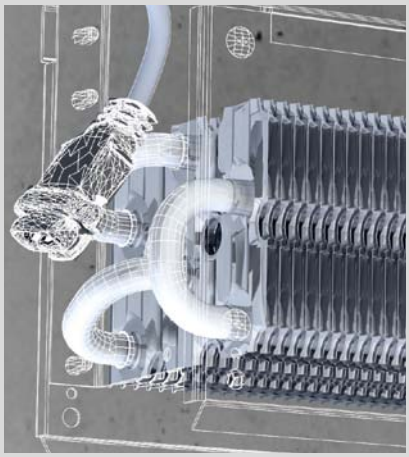

Heat exchanger for direct expansion

- Heat exchanger with staggered tube system consisting of special copper tubes, drawn oxygen-free and inner finned according to DIN EN 12735-1,2 with 10 mm diameter and closed, pure-aluminum HFE fins
- Internal cleanliness according to DIN 8964
- Fin spacing:
  A = 4.5 mm
- Fins flared to form-fit the core tube
- Highly effective heat transfer and compact design
- Tubing: Cu-Special
  Fins: Aluminium
  End plates: Aluminium
- Completely powder-coated (hygienic paint)



Fan (Küba *gastro slim* FM)

- Crossflow motor with ball bearing and 1.75 m cable
- In accordance with VDE/CE
- Permissible motor ambient temperatures: -40° C bis +60° C
- Roll diameter: 40 mm
- Protection class: IP 54 (motor)
- Insulation class of coil I.CI.F
- 230 V ± 10%, 50 Hz
- Operating values are the values of the built-in motor at +20 °C, with an un-obstructed air flow and a dry surface,
- Controller:
  Phase control ☐
  Transformer ☐
  Delta/star ☐
  Frequency converter ☐
  Please observe the manufacturer's information!



Fans

- Axial fan motors with ball bearing and 3 m cable with plugs for connection, IP 54
- In accordance with VDE/CE
- Permissible motor ambient temperatures: -20° C to +45° C
- Available fan diameter: 90 mm
- Protection class: IP 54 (motor and plug)
- Insulation class B
- 230 V ± 10%, 50/60 Hz
- Operating values are the values of the built-in motor at +20 °C, with an unobstructed air flow and a dry surface,
- Controller:
  Phase control ☐
  Transformer ☐
  Delta/star ☐
  Frequency converter ☐
  Please observe the manufacturer's information!

Electric defrost

- With the flexible Küba heater, the TAS can be retrofitted
- Tubular radiator can be fitted

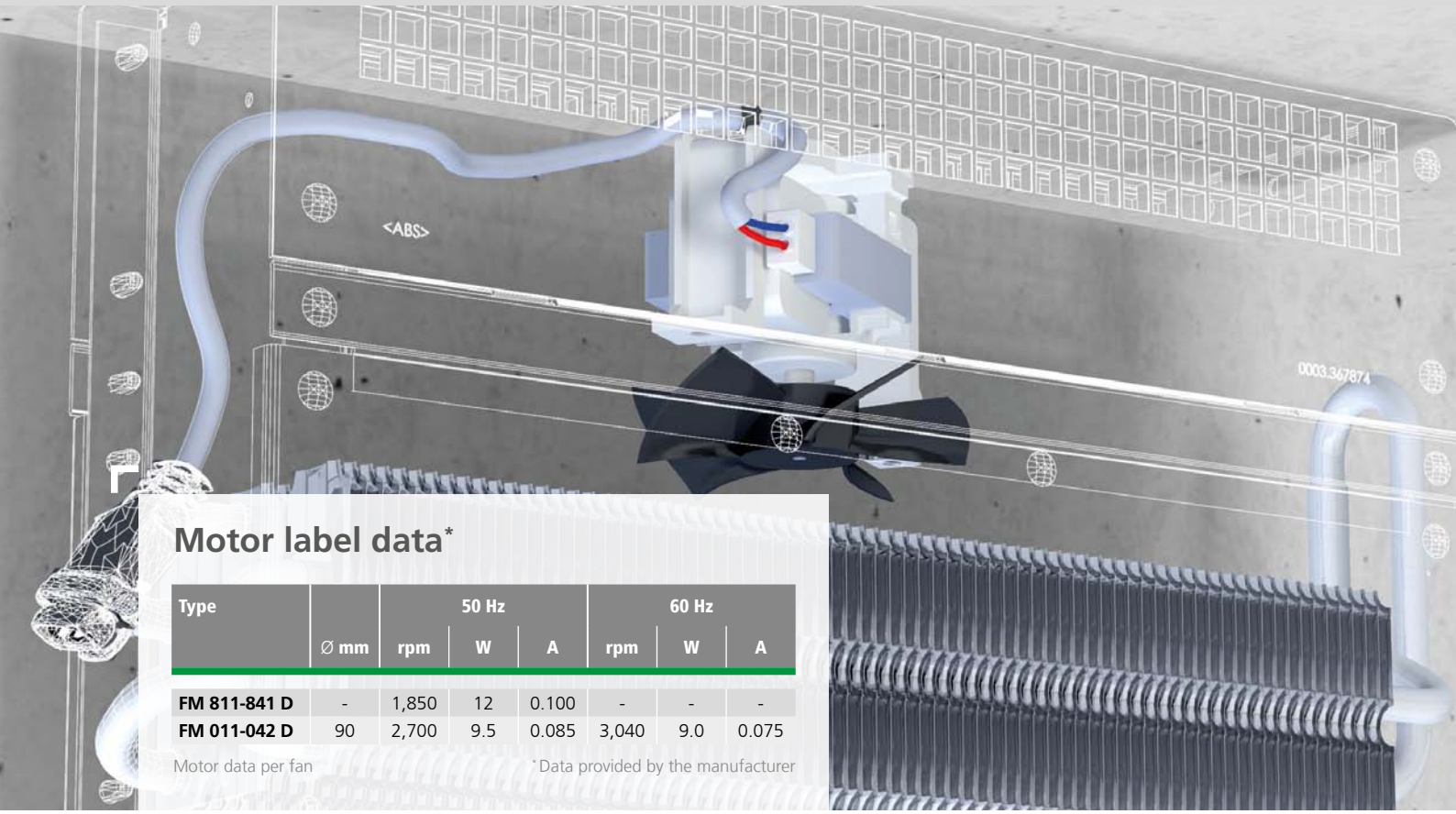

Motor label data*

Type	Ø mm	50 Hz rpm	50 Hz W	50 Hz A	60 Hz rpm	60 Hz W	60 Hz A
FM 811-841 D	-	1,850	12	0.100	-	-	-
FM 011-042 D	90	2,700	9.5	0.085	3,040	9.0	0.075

Motor data per fan

*Data provided by the manufacturer

Küba *gastro* FM & Küba *gastro slim* FM

Technical data – FM(O)A

4.5 mm

Type	Rating Q_0 at 50 Hz, DT1, R404A	Cooling surface	Air flow	Tube volume	Connections		Sound	Fans (Operational values at 50 Hz)				
	t_1 ±5 °C; DT1 =10K				Inlet	Outlet	L_{WA}	Blade	Current	Per Fan		
	kW	m^2	m^3/h	dm^3	Ø mm	Ø mm	db (A)	Ø mm	230 ± 10% V-1 50 Hz	rpm	W	A
Küba *gastro slim* FM												
FM(O)A 811 D	0.11	0.8	70	0.1	10 x1.0*	10 x1.0*	60	-	230 V -1	1,930	11	0.09
FM(O)A 821 D	0.15	1.2	67	0.2	10 x1.0*	10 x1.0*	60	-	230 V -1	1,930	11	0.09
FM(O)A 841 D	0.19	2.0	64	0.3	10 x1.0*	10 x1.0*	60	-	230 V -1	1,930	11	0.09
Küba *gastro* FM												
FM(O)A 011 D	0.15	1.2	85	0.2	10 x1.0*	10 x1.0*	61	90	230 V -1	2,730	9	0.09
FM(O)A 021 D	0.20	1.8	80	0.3	10 x1.0*	10 x1.0*	61	90	230 V -1	2,730	9	0.09
FM(O)A 022 D	0.26	1.8	140	0.3	10 x1.0*	10 x1.0*	64	90	230 V -1	2,730	9	0.09
FM(O)A 032 D	0.31	2.3	135	0.3	10 x1.0*	10 x1.0*	64	90	230 V -1	2,730	9	0.09
FM(O)A 042 D	0.34	2.9	125	0.4	10 x1.0*	10 x1.0*	64	90	230 V -1	2,730	9	0.09

Subject to modification.

* Single injection

Operating values are the values of the built-in motor at +20 °C, with an unobstructed air flow and a dry surface

Küba *gastro* FM & Küba *gastro slim* FM

Dimensions, weights

Type	Dimensions						Weights (net)	Weights (gross)
	H	B	T	L_{FM}	L_{FMO}	E_1	FM(O)	FM(O)
	mm	mm	mm	mm	mm	mm	kg	kg
Küba *gastro slim* FM								
FM(O)A 811 D	324	400	75	50	107	370	2,4	3,0
FM(O)A 821 D	362	400	75	50	107	370	2,8	3,4
FM(O)A 841 D	438	400	75	50	107	370	4,5	5,1
Küba *gastro* FM								
FM(O)A 011 D	238	406	107	70	133	370	2,3	2,8
FM(O)A 021 D	273	406	107	70	133	370	2,7	3,1
FM(O)A 022 D	273	406	107	70	133	370	3,3	3,8
FM(O)A 032 D	308	406	107	70	133	370	3,7	4,2
FM(O)A 042 D	378	406	107	70	133	370	4,3	4,8

Subject to modification.

The dimensions are only valid for the standard model design!
Note the differences in dimension among versions and accessories.

Küba *gastro* FM & Küba *gastro slim* FM

Dimensional drawings

Dimensional drawings Küba *gastro* FM (1-2 motors)

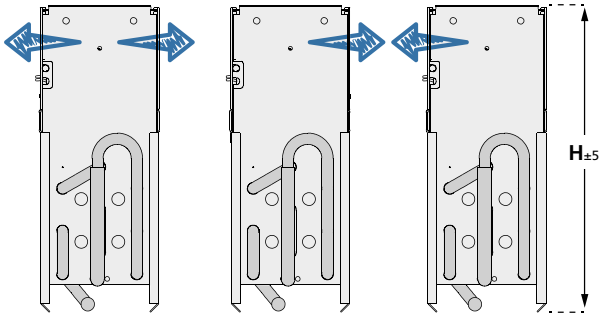

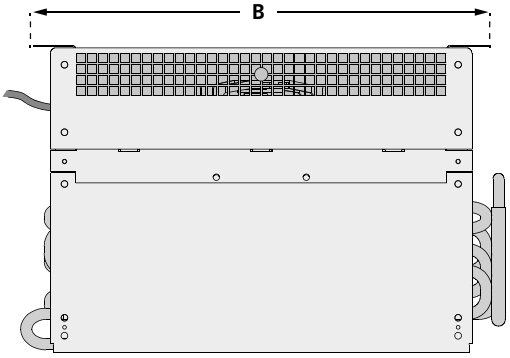

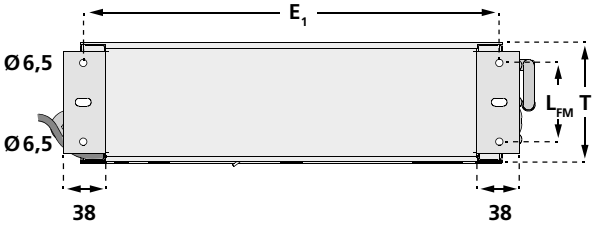

FM

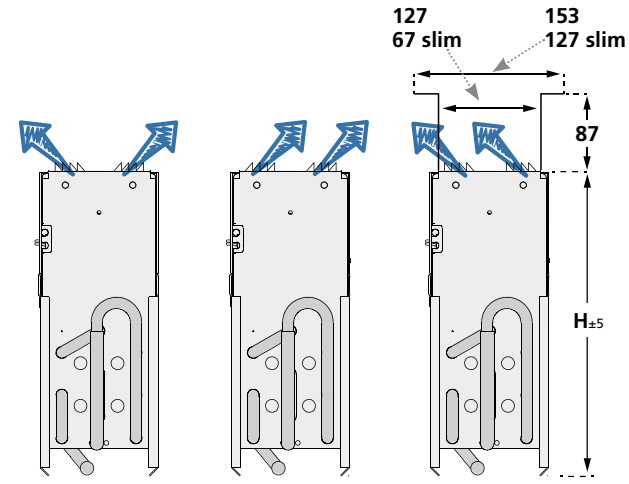

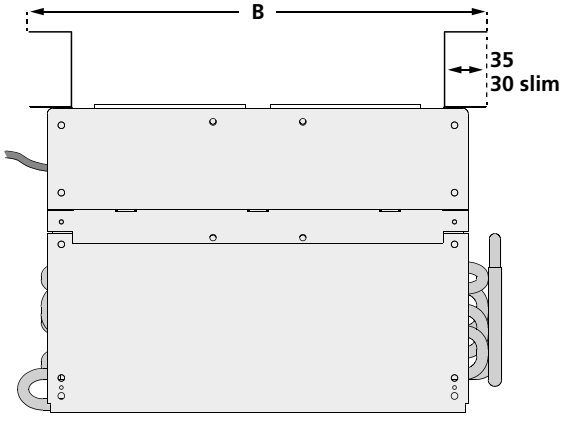

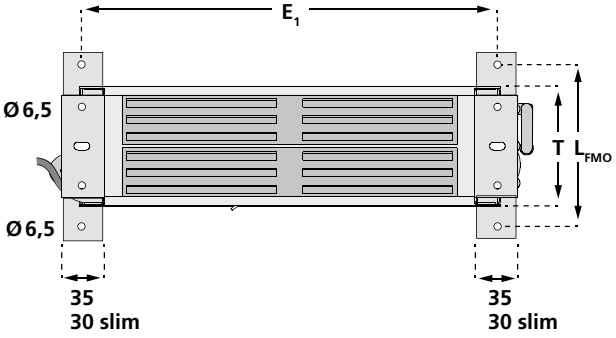

FMO

Drip tray (Plastic)

Dimensions:

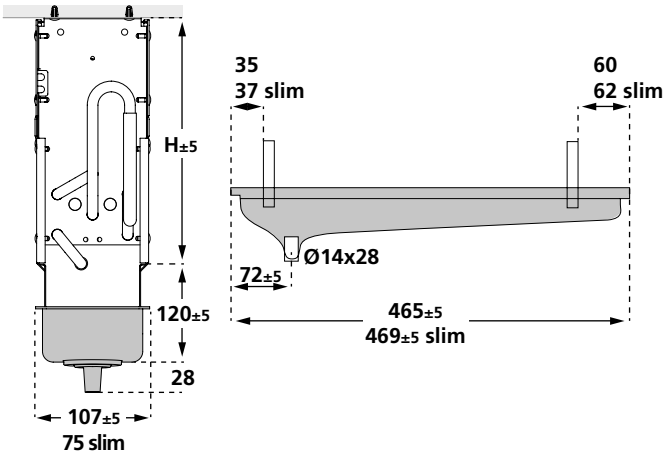

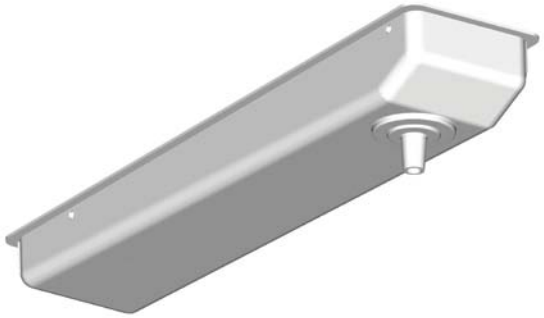

NOTE:

Polystyrene, not suited for electric heating. Stainless steel bracket.

Drip tray (Aluminum)

Dimensions:

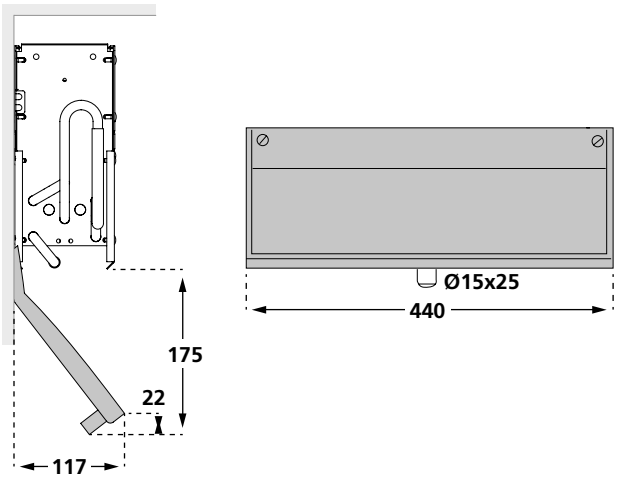

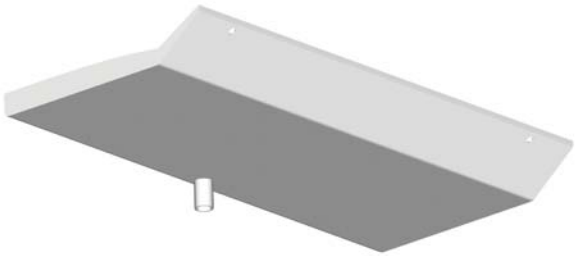

NOTE:

Aluminium, painted; suited for electric heating.

Accessories

Electric defrost

TAS for Cooler

For type	Description	Capacity	Length
		W	mm
FM(O) A 811 D	TAS 13	72	1,300
FM(O) A 821 D	TAS 13	72	1,300
FM(O) A 841 D	TAS 20	110	2,000
FM(O)A 011 D	TAS 13	72	1,300
FM(O)A 021 D	TAS 20	110	2,000
FM(O)A 022 D	TAS 20	110	2,000
FM(O)A 032 D	TAS 30	165	3,000
FM(O)A 042 D	TAS 40	220	4,000

Tubular radiator for Cooler

For type	Shape	Amount	Capacity	Length
			W	mm
FM(O) A 811 D	U35	1	305	900
FM(O) A 821 D	U35	1	305	900
FM(O) A 841 D	U35	2	305	900
FM(O)A 011 D	U35	1	305	900
FM(O)A 021 D	U35	2	305	900
FM(O)A 022 D	U35	2	305	900
FM(O)A 032 D	U35	2	305	900
FM(O)A 042 D	U35	2	305	900

TAS for Cooler and drip dray (aluminum)

For type	Description	Capacity	Length
		kW	mm
FM(O) A 811 D	TAS 13	72	1,300
FM(O) A 821 D	TAS 20	110	2,000
FM(O) A 841 D	TAS 30	165	3,000
FM(O)A 011 D	TAS 20	110	2,000
FM(O)A 021 D	TAS 30	165	3,000
FM(O)A 022 D	TAS 30	165	3,000
FM(O)A 032 D	TAS 40	220	4,000
FM(O)A 042 D	TAS 50	275	5,000

Küba *gastro* FM

Variants

CO_2-Variants

V 7.60 CO_2-Direct expansion

up to 60 bar operating pressure

Type	Rating Q_0 at NB2, R744 (CO_2) up to 60 bar	Cooling surface	Air flow	Tube volume	Connections (up to 60 bar)		Sound	Fans (Operational values at 50 Hz)		
					Inlet	Outlet	L_{WA}	Per Fan		
	kW	m^2	m^3/h	dm^3	Ø mm	Ø mm	db (A)	rpm	W	A
FM(O)A 811 D	0,10	0,8	70	0,1	10x1.0	10x1.0	60	1.930	11	0,09
FM(O)A 821 D	0,12	1,2	67	0,2	10x1.0	10x1.0	60	1.930	11	0,09
FM(O)A 841 D	0,16	2,0	64	0,3	10x1.0	10x1.0	60	1.930	11	0,09
FM(O)A 021 D	0,16	1,8	80	0,3	10x1.0	10x1.0	61	2.730	9	0,09
FM(O)A 022 D	0,22	1,8	140	0,3	10x1.0	10x1.0	64	2.730	9	0,09
FM(O)A 042 D	0,28	2,9	125	0,4	10x1.0	10x1.0	64	2.730	9	0,09

Standard condition	t_{L1}	t_0	DT1
NB2/SC2	0	-8	8

Subject to modification.

www.brand-change.com

GEA Küba GmbH

Kühler Weg 1 · 82065 Baierbrunn · Deutschland
Tel.: ++49(0)89/744 73-0 · Fax: ++49(0)89/744 73-107
kueba@gea.com · www.kueba.de

© Copyright 2015 GEA Küba GmbH · 0094.392BR.FMD.EN · Status as of 08/2015
Subject to technical changes