Gasketed Plate Heat Exchangers



General Operation Manual

engineering for a better world

GEA Heat Exchangers

Contents

1 Preface 5

2 Safety at the plate heat exchanger 6
2.1 General safety 6
2.2 Incorrect operating conditions 7
2.3 Permitted operators 7
2.4 Residual dangers 8

3 Operating instructions 10
3.1 Operating instructions 10
3.1.1 User notes 10
3.1.2 Safety notes in the text 11

4 Manager's obligations 12

5 Functional description 14

6 Intended purpose 15

7 Overview and description 16
7.1 Basic structure 16
7.2 Identification 17
7.3 Frames 19
7.4 Heat exchanger plates 21
7.4.1 Chevron pattern 21
7.4.2 Free Flow design 22
7.4.3 Plate evaporator design 22
7.5 Gaskets 22

8 Delivery, installation, transport, disposal 24
8.1 Delivery 25
8.2 Installation 26

8.3 Transport 30
8.3.1 Suspended transport with sling fastening at the carrying beam and shackles on the fixed plate 30
8.3.2 Suspended transport on ring bolts 31
8.3.3 Suspended transport with sling fastening on the clamping part 32
8.4 Installation 33
8.4.1 Space requirements 33
8.4.2 Pipe assembly 34
8.5 Disposal 34

9 Commissioning and decommissioning, operation 35
9.1 Start-up 36
9.2 Operation 37
9.3 Decommissioning 38
9.3.1 Short-term shutdown 38
9.3.2 Long-term shutdown 39

10 Maintenance and repair 40
10.1 Preparatory precautions 40
10.2 Opening the plate heat exchanger and removing the plates 45
10.2.1 Opening plate heat exchangers with a CD frame 45
10.2.2 Opening plate heat exchangers with a B frame 48
10.2.3 Removing the heat exchanger plates 49
10.3 Fitting the plates and closing the plate heat exchanger 50
10.4 Cleaning the plate heat exchanger 53
10.4.1 Cleaning the plates of the closed plate heat exchanger 53
10.4.2 Cleaning the plates of the opened plate heat exchanger 56
10.5 Replacing the gaskets 58
10.6 Replacing the frame seals 59
10.7 Maintaining the frame 59

11 Troubleshooting 60
11.1 Output deficit 60
11.2 Leakages 61

12 Technical terms 63

1 Preface

With GEA Ecoflex you use the technical know how of one of the worldwide leading manufacturers of plate heat exchangers (PHE).

We would like to make the handling of the plate heat exchanger as safe and simple as possible. For this reason, these comprehensive operating instructions serve as your personal adviser who explains everything understandably and clearly: structure, function, installation, operation, maintenance, troubleshooting, transport and repair.

We especially devote ourselves to the subject of safety, so that all possible dangers or damage can be avoided from the start. For that reason alone, all employees who deal with the plate heat exchanger should be able to refer to these important operating instructions at all times.

In the concise table of contents you will quickly find what you are looking for. If not, look in the index with page references. In the same way all technical terms are informatively explained. After all, no questions should remain open, and in the case they do, your GEA Ecoflex agent or the central service department is glad to assist you further.

Additional operating instructions for special applications supplement these general operating instructions.

With this in mind, we wish you a trouble-free operation with GEA Ecoflex plate heat exchangers.

GEA Ecoflex GmbH
Service department
Karl-Schiller-Str. 1-3
D-31157 Sarstedt

Phone: +49 (0) 5066 / 6 01 - 3 33
Telefax: +49 (0) 5066 / 6 01 - 1 05
Internet: http://www.gea-phe.com
e-Mail: service@gea-ecoflex.de

2 Safety at the plate heat exchanger

2.1 General safety

This chapter advises you on general precautions for the proper handling of the plate heat exchanger and on the dangers the user may encounter.

If the plate heat exchanger is employed improperly or not according to the intended purpose, or if the safety notes are not observed, dangers to persons and property can arise.

NOTE

Read this chapter attentively. It contains important information and obligations. It concerns your health and the trouble-free operation of the plate heat exchanger.

CAUTION

The operator is responsible for the safe operation of the plate heat exchanger.

The following points must be observed:

- ➔ Always adhere to the general, national, and operational safety regulations, for example, wear protective glasses, close-fitting protective clothing, and safety shoes.
- ➔ Always adhere to the safety instructions in the individual chapters of these operating instructions.
- ➔ The plate heat exchanger may only be operated in perfect condition. Each change on the plate heat exchanger must be immediately reported to the nearest person responsible available.
- ➔ Before beginning work with the plate heat exchanger, operators must familiarise themselves with the possible dangers.
- ➔ Before each start of the plate heat exchanger, ensure that all parts of the device are in perfect condition and function correctly.

2.2 Incorrect operating conditions

Operation of the plate heat exchanger is not permitted if:

- substantial faults or damage occurs,
- the maintenance is not performed regularly,
- the permissible operating conditions (including internal pressure, temperature, media, external loads) are exceeded.

NOTE

GEA Ecoflex accepts no liability for damage caused by incorrect operating conditions.

2.3 Permitted operators

For operation of the plate heat exchanger, everyone has to

- be appropriately trained for the task to be performed,
- be familiar with the work safety and accident prevention regulations,
- be instructed in the handling of the plate heat exchanger and
- have read and understood these operating instructions.

Persons who are responsible for the set-up, assembly, start-up, maintenance or disassembly of the plate heat exchanger must have the knowledge required.

2.4 Residual dangers

Residual dangers can never be fully excluded. You can only prevent these dangers by appropriate behaviour.

CAUTION

Danger of injury!

- ➔ Heat exchanger plates:
  The thin heat exchanger plates are sharp-edged. When handling heat exchanger plates, always wear suitable protective gloves.
- ➔ External of the plate heat exchanger:
  The burr, threads or similar present a risk of injury. Always wear suitable protective gloves when handling the outside of the plate heat exchanger.



- ➔ The plate heat exchanger may topple over:
  All plate heat exchangers that are standing and not fixed present the risk of toppling over. This in particular applies to the NT50M, NT50X, NT100X and VT10 plate heat exchangers. Always secure the upright plate heat exchanger against toppling by preferably fixing it securely to the ground.

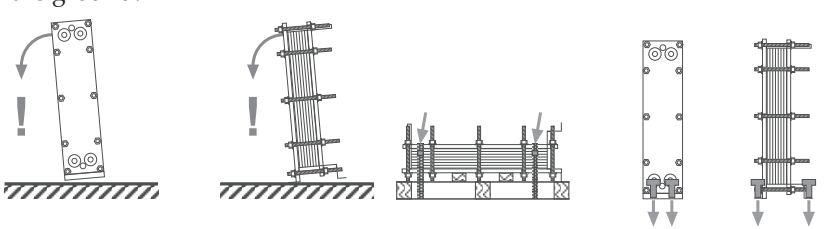

➔ Opening the plate heat exchanger:
Before opening the plate heat exchanger, ensure that it is unpressurised and empty. When opening the plate heat exchanger, always ensure that the heat exchanger plates do not unintendedly loosen from the frame and tip over, see "Opening the plate heat exchanger and removing the plates" (page 45). Also ensure that the pressure plate is secured against unintended slippage (e.g. on ships).

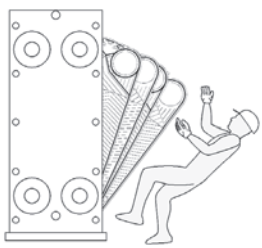

➔ Transporting the plate heat exchanger:
Before transporting the plate heat exchanger, always ensure that the hoisting gear is of sufficient dimensions and securely fixed. Never step underneath suspended loads.

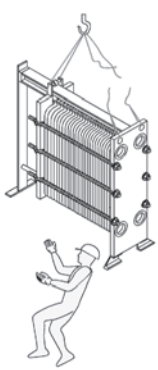

➔ Hazardous flow media:
Hazardous flow media present dangers of chemical burns, burning or poisoning. Always wear suitable protective clothing when working on the plate heat exchanger with hazardous flow media.

3 Operating instructions

3.1 Operating instructions

These operating instructions are the instructions of the manufacturer for operators of plate heat exchangers and for all persons who are responsible for the set-up, operation, maintenance and repair of the device.

These operating instructions are generally applicable to all bolted/gasketted (not welded) plate heat exchangers manufactured and supplied by GEA Ecoflex.

3.1.1 User notes

Drawings and figures

The drawings in these operating instructions are exemplary. For reasons of clarity, some drawings have been greatly simplified. The actual details depend on the individually delivered plate heat exchanger. You find diagrams and dimensions of the delivered plate heat exchanger in the technical documentation supplied.

Note for the operator of the plate heat exchanger

The operator of the plate heat exchanger is the person who is in charge of the operation of the device.

Note for the technician who sets up the plate heat exchanger

These operating instructions contain no details about special tools that are needed for the setting up and operating the plate heat exchanger.

3.1.2 Safety notes in the text

In these operating instructions, the following symbols are used in order to draw your attention to dangers when handling the plate heat exchanger or provide you with information about handling the plate heat exchanger:



CAUTION

This symbol means danger to the life and health of persons.

The following text explains the type of danger and its effects and provides instructions for averting the danger.

➔ Not adhering to the instructions can have health effects up to and including death.



DANGER

This symbol means danger for the plate heat exchanger, for parts, or for its environment.

The following text explains the type of danger and its effects and provides instructions for averting the danger.

➔ Not adhering to the instructions can cause substantial damage to the plate heat exchanger.



NOTE

This symbol appears above paragraphs that provide you with useful or important notes for the correct handling of the plate heat exchanger. This information helps you to avoid problems and makes it easier to handle the plate heat exchanger.

4 Manager's obligations



CAUTION

Danger of injury!

In the case of hazardous media (acids or similar media), high pressures and high/low temperatures in the plate heat exchanger, there is a danger of injury during maintenance or in the case of leakages.

➔ In this case you must be sure to provide a splash protector.

➔ This splash protector may only be removed when the plate heat exchanger reaches room pressure and room temperature, or is empty.

As manager of the plate heat exchanger you must ensure that each operator who is responsible for the set-up, operation, maintenance or repair of the plate heat exchanger has read and understood, from beginning to end, the parts of the operating instructions important for the job.

The plate heat exchanger is built according to state-of-the-art technology and is reliable in service. Nevertheless the plate heat exchanger may present dangers or may be damaged if you do not observe the following instructions:

- These operating instructions must always be accessible to the operators entrusted to work on the plate heat exchanger.
- Only operators who are instructed in handling the plate heat exchanger and the basic work safety and accident prevention regulations may work on the plate heat exchanger. For safety reasons it is forbidden for other persons to be in the area of the plate heat exchanger.
- The safety-conscious operating by the operators has to be checked regularly.
- As manager you must ensure that:
  - the plate heat exchanger remains in functional order.
  - no premature wear of specific parts of the plate heat exchanger results from unfavourable ambient conditions.

Unfavourable ambient conditions, for instance for

Sealing materials:	– Aggressive gases and/or aggressive aerosols in the surrounding air – Effects of UV radiation (e.g. sunlight) – Extreme ambient temperatures
Metallic components:	– Aggressive gases and/or aggressive aerosols in the surrounding air – Humidity

- all maintenance/inspections are carried out in regular intervals.
- no changes or modifications are carried out on the plate heat exchanger without permission of the manufacturer of the plate heat exchanger. A change can lead to the expiration of the operating permit.
- all laws and regulations – even if they are not explicitly mentioned here – valid for the plate heat exchanger as well as the valid accident prevention regulations are observed.

5 Functional description

A series of contoured plates with transfer ports forms a pack of flow channels in the plate heat exchanger. The heat exchange media flow through these flow channels in alternate channels.

Usually single-pass plate heat exchangers are used. In the case of single-pass plate heat exchangers, all feed and return pipes are connected to the fixed frame plate, i. e. on one side.

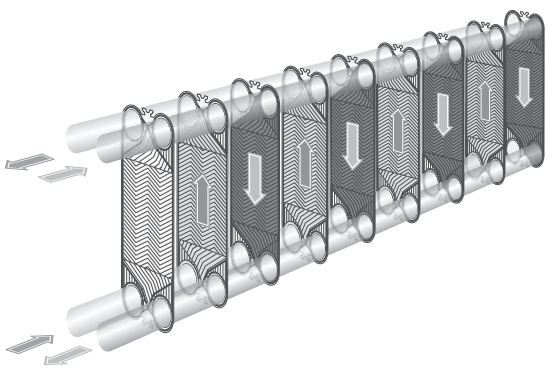

Close temperature differences between the media may demand the use of multi-pass plate heat exchangers. In the case of multi-pass plate heat exchangers, the connection pipes are placed at the fixed frame plate and at the pressure plate, i. e. on both sides.

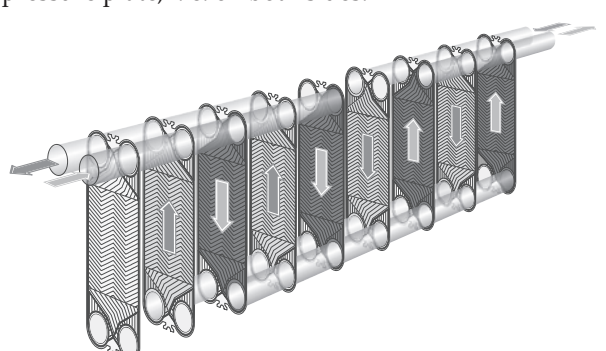

6 Intended purpose

This plate heat exchanger has been specially designed and manufactured for your specified operating conditions concerning pressure, temperature, flow rates, and type and composition of the flow media.

If a change in the specified operating conditions becomes necessary, GEA Ecoflex must be consulted. The plate heat exchanger may only be operated under new operating conditions after GEA Ecoflex has examined, approved, and, as the case may be, has altered the documentation of the plate heat exchanger.

Intended use includes:

- adhering to the valid national and international laws, decrees, regulations, directives and other rules for the installation site .
- following all safety instructions of these operating instructions.
- adhering to regular inspection and maintenance work.

NOTE

GEA Ecoflex accepts no liability for damage caused by deviations from the specified operating conditions for the plate heat exchanger.

7 Overview and description

7.1 Basic structure

The following figure represents the basic structure of a plate heat exchanger. The actual design depends on the application.

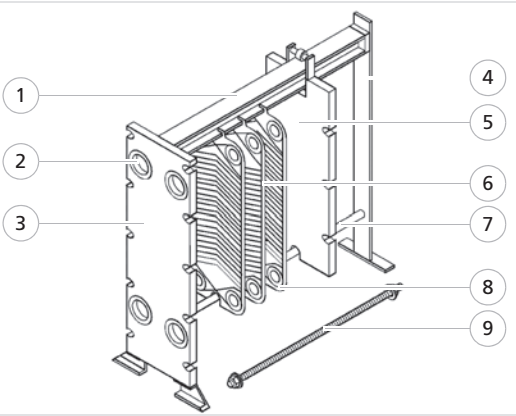

No.	Component
1	Carrying beam
2	Pipe connections
3	Fixed plate
4	Support column
5	Pressure plate
6	Heat exchanger plates
7	Lower guiding bar
8	Gaskets
9	Clamping part

The plate pack consists of contoured heat exchanger plates (1) and the corresponding gaskets (2) of varying number and arrangement.

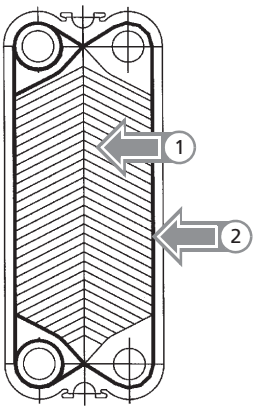

7.2 Identification

Each GEA Ecoflex plate heat exchanger is provided with a nameplate. It is fastened to the outside of the fixed frame plate of the plate heat exchanger. Here you'll find information on:

- Plate heat exchanger type
- Serial no.
- Permissible pressures [bar g]
- Permissible temperatures [° C]
- Test pressure [bar g]
- Volume [L]
- Net weight, year of manufacture
- Compression dimensions:
- "a max." / "a min." [mm]
- Additional details [project specific]

Examples for the nameplate design in conformity with the European Directive on Pressure Equipment 97/23/EC.

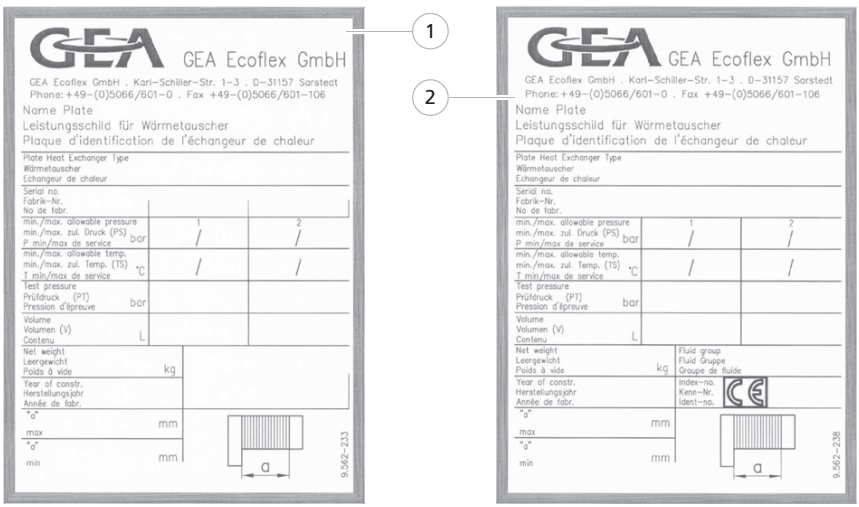

No.	Component
1	Plate heat exchanger is exempt from CE-labelling requirements
2	Plate heat exchanger is subject to CE-labelling requirements

Each plate heat exchanger is supplied with a dimension sheet or, alternatively, an assembly drawing, and a flow diagram.

The dimension sheet or the assembly drawing shows the external dimensions as well as details of the type, size and position of the pipe connections.

The flow diagram shows the plate arrangement and type of plate heat exchanger, the plate material of the plate heat exchanger, the plate thickness as well as the sealing material and the part numbers.

7.3 Frames

GEA Ecoflex plate heat exchangers are available in different application-specific frame designs. There are two basic designs, B and CD. The design B is especially employed for longer plate packs. Variants of this design additionally are labelled with the identification codes A, C, L and S.

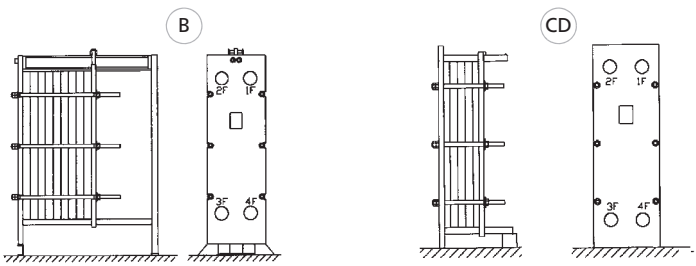

Special stainless steel designs with intermediate elements for separating the individual compartments are employed for the foodstuff and pharmaceutical industries.

The frames made of structural steel are given a weather-protective coating. The clamp screws and screw nuts are made of high-strength alloy steels and can be zinc-plated.

The pipe connections can be attached to the fixed plate, to the pressure plate, and possibly to intermediate elements.

The pipe connections on the fixed and pressure plate are positioned as follows:

- From an outside position looking onto the fixed plate, the connections 1F-4F are numbered consecutively anticlockwise. (1)
- From an outside position looking onto the pressure plate, the connections 1L-4L are numbered consecutively clockwise. (2)

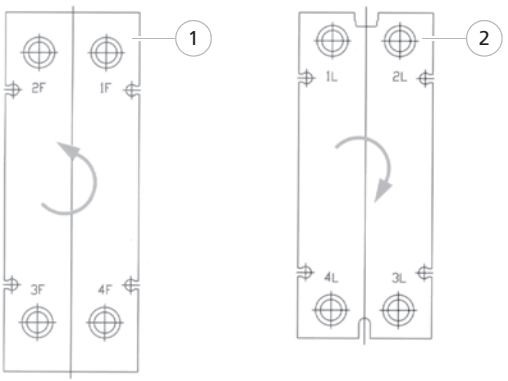

In order to fulfil customer-specific requirements, different connection types are available.

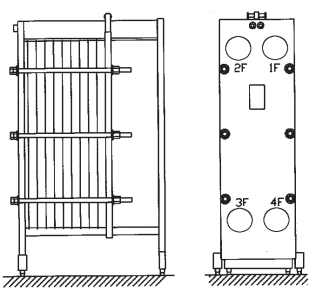

Partly these frames are equipped with height adjustable transport feet. In this case, the feet are not anchored to the ground. Beneath the calotte feet there are thrust plates. These thrust plates are not part of the standard equipment.

7.4 Heat exchanger plates

NOTE

The selection of the heat exchanger plate material is determined by customer-specific operating conditions (including pressure, temperature, media, operating mode). In the case of some specific applications a material removal at the heat exchanger plates by the media used is a typical process. This can lead to a malfunction of the heat exchanger plates and to a mixing of the media.

The heat exchanger plates and gaskets are basic components in the plate heat exchanger. GEA Ecoflex differentiates the following product groups:

- Chevron pattern
- Free Flow design
- Plate evaporator design

7.4.1 Chevron pattern

This product group includes the heat exchanger plates of the VARITHERM (VT), NT series, and LASER-welded cassettes (LWC).

these heat exchanger plates have horizontal and vertical stamping structures that are respectively used individually or combined. They are used for clean media with a low viscosity and also for high working pressures.

The gaskets of this product group can be fixed with adhesive. Additionally, many plate types allow adhesive-free fixing (LocIn, EcoLoc).

7.4.2 Free Flow design

This includes the heat exchanger plates of the FA, NF series and the N40 plate.

The special feature of this product group is the unrestricted broad flow cross section between the heat exchanger plates. Highly viscose media or media containing solids require the use of this product group.

The gaskets of this product group are fixed with adhesive. The plate type N40 allows adhesive-free fixing (LocIn).

7.4.3 Plate evaporator design

The heat exchanger plates of the series CT (Concitherm) form this product group.

Liquids are concentrated by evaporation using these plates ("evaporator").

The gaskets are fixed with adhesive. The plate type CT187 allows adhesive-free fixing (LocIn). The plate type CT193 consists of LASER welded cassettes.

7.5 Gaskets

CAUTION

Damage to persons and property!

The use of inadmissible pressures, temperatures and media can lead to an immediate failure of the gaskets and a grave endangerment of persons and the surroundings.

→ Therefore, never exceed the permissible operating parameters.

WARNING

Leakage!

The gaskets are wearing parts and sensitive to chemical, thermal and mechanical damage. The selection of the sealing frame material and its properties is effected on the basis of customised specifications (pressure, temperature, media).

➔ Unintended use can lead to a reduction of the service life. Elastomer gaskets are always subject to the ageing process (e.g. embrittlement).

There are two basic groups of gaskets:

- Gaskets made of elastomers, available in different materials and design types (e.g. 2-eye gaskets and 4-eye start and/or end gaskets). The gaskets in principle can be fixed with adhesive, also often without adhesive (LocIn, EcoLoc).
- Gaskets made of mineral fibres ("hard gaskets"). They are principally fixed with adhesive. In contrast to elastomer gaskets, these gaskets of mineral fibre cannot compensate temperature load changes (e.g. start-up and shut-down operation). Therefore, leakages may occur during these operating phases.

All gaskets are designed to enable separating both media from each other at the transfer ports by means of a double-gasket guidance system. The thus formed leakage cavity in the case of leakages in this area has the function to dissipate the leakage fluid to the outside via gaps in the gasket webs (leakage grooves), and thus make leakages identifiable immediately.

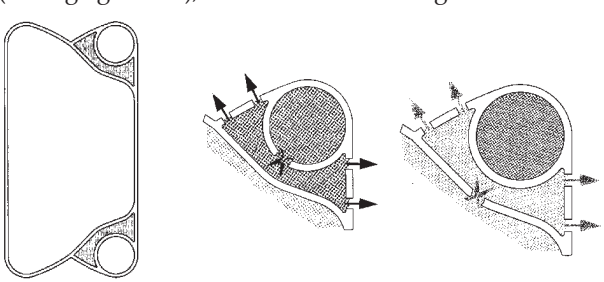

The materials of the gaskets are clearly marked by coded colours. The storage of the gaskets must be carried out appropriately.

➔ Never exceed the permissible parameters.

8 Delivery, installation, transport, disposal

CAUTION

Damage to persons and property!

Improper and careless handling of the plate heat exchanger can lead to danger to persons and property.

→ The plate heat exchanger may never be lifted underneath the plate pack, at the connections or at the tightening bolts.

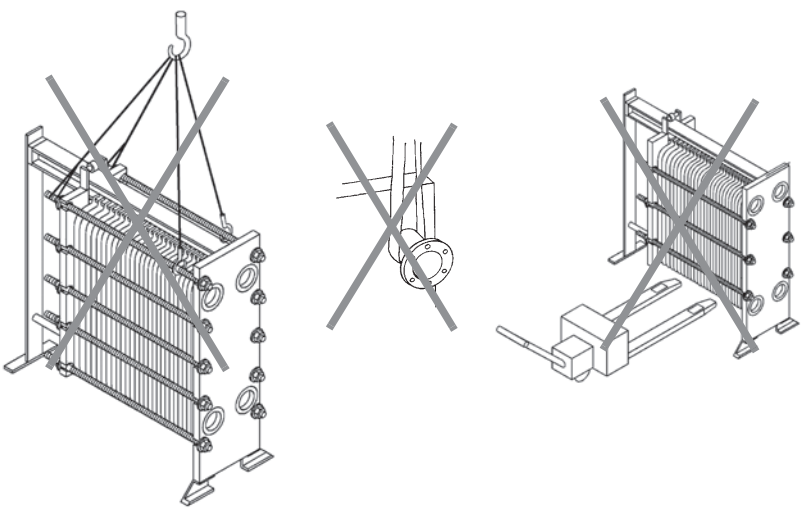

8.1 Delivery

The fully assembled plate heat exchanger is packed and delivered either lying on its side or upright, depending on the frame type.

If it is delivered lying on its side, the plate heat exchanger is anchored by the back of the fixed plate to solid planks. A forklift truck can pick the plate heat exchanger up from beneath the planks and transport it.

The plate heat exchanger that is packed upright and to be transported upright is top heavy. It is bolted on timber planks in a manner that is safe for transport and, according to the section "Transport" (page 30), has to be unloaded and transported when it is floating. In no case may the device be lifted under the heat exchanger plate pack because this inevitably leads to a damaging of the plate pack.

In the BC frame, the height-adjustable transport feet replace the ball feet. The transport feet can be found as an extra item to the plate heat exchanger.

Individual parts of the plate heat exchanger are packaged on pallets and in appropriate cardboard boxes on pallets. Upon request, we will use special air freight, container and wood packages. All packaging materials used comply with EU packaging ordinance. The wood packaging materials are designed in accordance with IPPC standard and are labelled accordingly. The disposal of the packaging material is the sole responsibility of the customer.

NOTE

If you notice damage to an item at delivery in spite of careful packaging, please be sure to note the extent and type of the damage in the transport documents and have it receipted by the supplier. Please take a photograph of the damage and report it to us immediately. We need your notification of claim within the legally stipulated period of time, together with the original freight receipt and with receipted reservation.

8.2 Installation

WARNING

Danger to life!

When installing the plate heat exchanger, there always is the risk of toppling. All plate heat exchangers that are standing and not fixed present the risk of toppling over. Always ensure that:

- ➔ the hoisting gear are of sufficient dimensions,
- ➔ the hoisting gear cannot come loose or slide off,
- ➔ no swing movements to the side result when lifting the plate heat exchanger,
- ➔ the floor at the installation site is sufficiently large, level and able to support the load.
- ➔ all plate heat exchangers, in particular the NT50M, NT50X, NT100X and VT10 plate heat exchangers immediately after the installation are preferably fixed to the ground in a secure manner. These plate heat exchangers can topple over by a relatively small force effect.

DANGER

Damage on the plate heat exchanger!

The connecting pieces can bend or crack.

- ➔ Attach the hoisting gear (slings) only as in the following.
- ➔ When attaching the hoisting gear (slings), make sure that they are firmly seated.
- ➔ Never use a chain or a steel rope, but only slings.

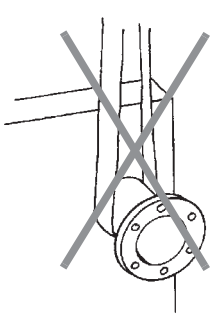

Carry out the following work steps:

1. Remove all of the fastening screws and elements from the plate heat exchanger and from the pallet.

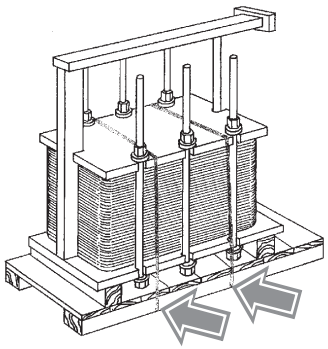

2. Attach a sling to the upper tightening nut on each side of the plate heat exchanger.

➥ Do not use steel ropes or chains!

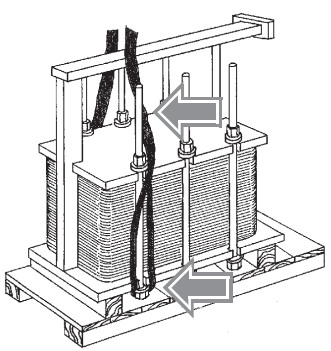

➔ If the clamping nuts for applying the round sling are not accessible, slightly tilt the plate heat exchanger by using an additional round sling. In doing this, always place the round sling between two clamping nuts.

➔ Then attach the slings around the top tightening nuts.

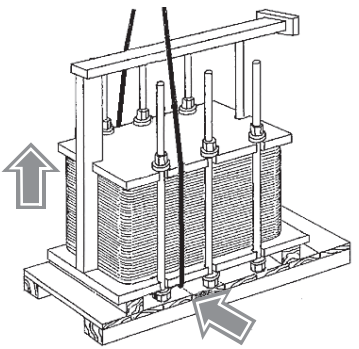

3. Lift the plate heat exchanger slowly from the pallet over its centre of gravity.

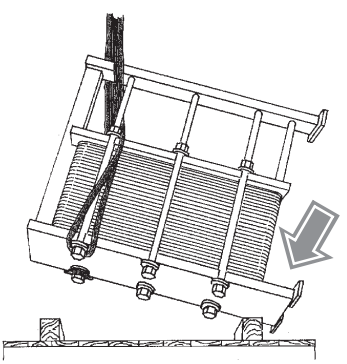

4. Slowly lower the plate heat exchanger on the edge of the fixed plate or on the feet of the plate heat exchanger. Align the plate heat exchanger and bring it to its final position at the installation site.

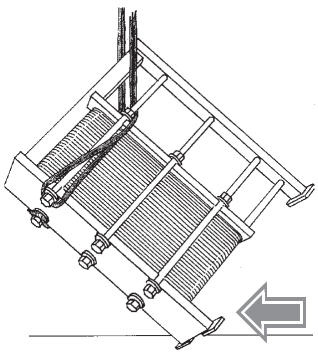

5. Remove the slings and other aids.

6. Afterwards fix the plate heat exchanger firmly to the ground.

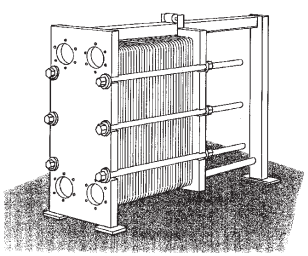

✓ **The plate heat exchanger is installed.**

8.3 Transport

WARNING

Danger to life! Damage of the plate heat exchanger!

Before transporting the plate heat exchanger, always ensure that:

- ➔ the hoisting gear are of sufficient dimensions,
- ➔ the hoisting gear cannot come loose or slide off,
- ➔ no swing movements to the side result when lifting the plate heat exchanger,
- ➔ a sufficient safety distance is kept by the operating personnel,
- ➔ the floor at the installation site is sufficiently large, level and able to support the load.
- ➔ particularly the NT50M, NT50X, NT100X and VT10 plate heat exchangers are only transported upright if they are fixedly screwed to the transport equipment.

The suspended transport always starts out from an upright position of the plate heat exchanger.

8.3.1 Suspended transport with sling fastening at the carrying beam and shackles on the fixed plate

Carry out the following work steps:

1. Attach two suitable shackles in both holes intended for that purpose on the upper side of the fixed plate.
2. Attach a sufficiently long sling to the carrying beam directly behind the pressure plate and to both shackles.

➥ Do not use steel ropes or chains!

3. Slowly lift the plate heat exchanger.

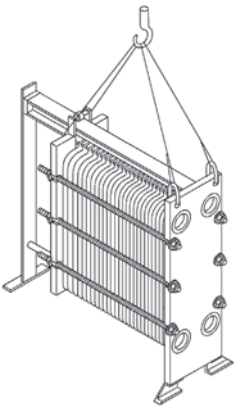

✓ **The plate heat exchanger now can be transported.**

8.3.2 Suspended transport on ring bolts

Carry out the following work steps:

1. Attach the hoisting gear to both transport eyes on the top side of the carrying beam.

2. Slowly lift the plate heat exchanger.

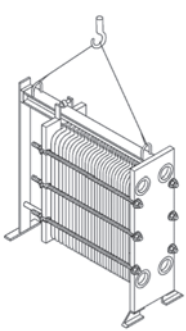

✓ **The plate heat exchanger now can be transported.**

8.3.3 Suspended transport with sling fastening on the clamping part

Use this transport method only when the above-described fastening possibilities are not available.

Carry out the following work steps:

1. Attach a sling around the top tightening bolts on each side of the plate heat exchanger.

➥ Do not use steel ropes or chains!

2. Slowly tilt the plate heat exchanger until it reaches a hanging position.

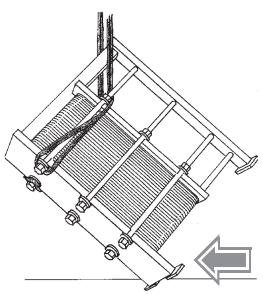

✓ **The plate heat exchanger now can be transported.**

8.4 Installation

WARNING

Danger to life!

When installing the plate heat exchanger, there always is the risk of toppling. All plate heat exchangers that are standing and not fixed present the risk of toppling over. Always ensure that:

- ➔ the hoisting gear is sufficiently dimensioned,
- ➔ the hoisting gear cannot come loose or slide off,
- ➔ a sufficient safety distance is kept by the operator,
- ➔ the floor at the installation site is sufficiently large, level and able to support the load.
- ➔ all plate heat exchangers, in particular the NT50M, NT50X, NT100X and VT10 plate heat exchangers immediately after the installation are preferably fixed to the ground in a secure manner. These plate heat exchangers can topple over by a relatively small force effect.

In case of outdoor installation, take precautions against freezing the flow media in the plate heat exchanger, if necessary.

8.4.1 Space requirements

Provide a sufficient free space around the plate heat exchanger. This facilitates access to the plate heat exchanger and necessary service tasks (e.g. replacing individual plates, compressing the plate pack).

The values for the necessary space given in the adjacent figure are guide values and are recommended by GEA Ecoflex. You provide an adequate access to the plate heat exchanger.

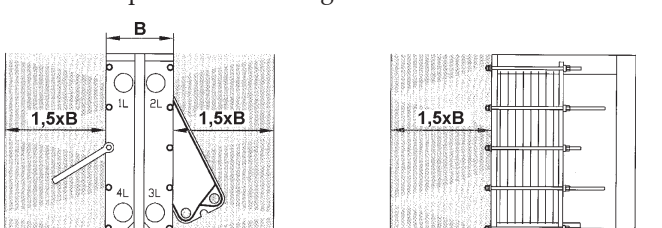

8.4.2 Pipe assembly

The GEA Ecoflex plate heat exchangers are provided with different connection types according to the purpose. Pay attention to the following points during pipe assembly:

DANGER

Damage on the pipe connections and on the plate heat exchanger!

By request, you can obtain an overview of the admissible forces and moments for the plate heat exchanger.

→ Make sure that no forces, moments, or vibrations that are too high are transferred via the pipes onto the connections of the plate heat exchanger.

NOTE

In order to avoid clogging problems during commissioning the plate heat exchanger, GEA Ecoflex strongly recommends to use filters or bypasses for the first flushing of the overall pipe system.

8.5 Disposal

As a customer, you are responsible for the disposal of the packing materials.

On request, GEA Ecoflex takes over the disposal of the plate heat exchanger. For the cost of labour, the plate heat exchanger is disassembled, transported away and professionally disposed.

NOTE

If the plate heat exchanger or its parts are contaminated, GEA Ecoflex cannot take over the disposal. In this case, the disposal of the plate heat exchanger is the manager‘s obligation.

9 Commissioning and decommissioning, operation

CAUTION

Danger of injury!

Hazardous flow media (corrosive, poisonous, flammable, explosive etc.) present dangers of chemical burns and burning.

➔ Inform yourself beforehand which flow media are used and make sure that a protective covering is on hand.

DANGER

Environmental damage! Damage on the plate heat exchanger!

When ecologically harmful flow media flow out, serious environmental damage are possible.

➔ Make sure that a possibility for draining the product and a catchment tank for the entire filling capacity of the plate heat exchanger are provided.

➔ If the plate heat exchanger is further compressed below "a min.", the plates warp. Make sure that the plate pack is compressed to the necessary compression dimension "a min." < "a" < "a max.".

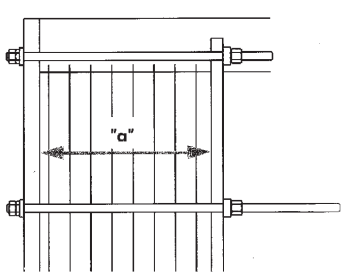

DANGER

Damage on the plate heat exchanger!

Fast switching operations (e.g. of valves in the pipes connected to the plate heat exchanger) or process-related events (e.g. spontaneous vaporisation, condensate impacts) can bring about high pressure surges.

- ➔ Avoid high-pressure surges through the flow media in order to avoid damaging the plate heat exchanger.
- ➔ The retightening of the clamping parts of the plate heat exchanger may only be carried out in the depressurised state, as otherwise the compression dimension "a min." might be underrun, see explanation of "a min." in the chapter "Technical terms" (page 63).

9.1 Start-up

Before commissioning, carry out a visual check on the plate heat exchanger and make sure that

- the plate heat exchanger is not operated with impermissible flow media, pressures and temperatures.
- all pipe connections are firmly connected to the plate heat exchanger.
- all required components of the plate heat exchanger are completely installed.
- the permissible compression dimension "a min." is not underrun, see nameplate in the section "Identification" (page 17). The heat exchanger plates might be permanently damaged.
- when restarting, no residues of previous processes (e.g. cleaning agents) are present in the plate heat exchanger.
- the plate heat exchanger is bleeded.

- pressure surges are avoided. The normal operation of the plate heat exchanger may be jeopardised. Flow media could escape.

✓ If all of these conditions are fulfilled, you can start operating the plate heat exchanger.

NOTE

If faults occur during commissioning the plate heat exchanger, see chapter "Troubleshooting" (page 60).

In order to avoid clogging problems during commissioning the plate heat exchanger, GEA Ecoflex strongly recommends to use filters or bypasses for the first flushing of the overall pipe system.

9.2 Operation

CAUTION

Danger of injury! Damage on the plate heat exchanger!

If the plate heat exchanger is in operation, during operations on the plate heat exchanger there is risk of injury or the danger that the plate heat exchanger might be damaged.

➔ For maintenance or repair operations, always decommission the plate heat exchanger first.

Visually inspect the plate heat exchanger regularly during operation and make sure that:

- the plate heat exchanger is not operated with impermissible flow media, pressures and temperatures;
- the minimum and maximum parameters given on the nameplate are not exceeded. If the parameters are exceeded, the operating approval dissolves and GEA Ecoflex accepts no liability for resulting damage.
- pressure surges are avoided. The normal operation of the plate heat exchanger could be jeopardised. Flow media could escape.

NOTE

If faults occur during operation of the plate heat exchanger, see chapter "Troubleshooting" (page 60).

9.3 Decommissioning

CAUTION

Danger of injury!

All plate heat exchangers that are standing and not fixed present the risk of toppling over. Always ensure that:

- ➔ the plate heat exchanger only is transported in a suspended state, or when it is lying on the base plate.
- ➔ particularly the NT50M, NT50X, NT100X and VT10 plate heat exchangers are only transported upright if they are fixedly screwed to the transport equipment.
- ➔ the plate heat exchanger always is secured against toppling, even if it only is stored upright for a short time.

9.3.1 Short-term shutdown

DANGER

Escape of environmentally hazardous flow media possible!

Flow media can be dangerous and environmentally hazardous.

- ➔ Make sure that no flow media can escape during the shutdown period.
- ➔ In case of outdoor installation, take precautions (e.g. emptying, heating) against freezing the flow media in the plate heat exchanger.

9.3.2 Long-term shutdown

DANGER

Premature component wear!

The components of the plate heat exchanger can prematurely wear due to unfavourable ambient conditions or by flow media remaining within the plate heat exchanger.

- → If the plate heat exchanger is decommissioned for a longer period, it has to be decompressed and completely emptied.
- → Additionally we recommend a through cleaning and appropriate storage until recommissioning.

NOTE

You can obtain detailed information about storage conditions from your GEA Ecoflex service department (see back cover).

10 Maintenance and repair

10.1 Preparatory precautions

Before operations are started, check the delivered frame type of the plate heat exchanger on the basis of the documentation supplied.



CAUTION

Danger of injury!

During maintenance and repair work on the plate heat exchanger there is risk of injury. For this reason, always adhere to the following points:

- ➔ Always wear suitable protective clothing.
- ➔ If a pressurised or filled plate heat exchanger is opened, the flow media can escape uncontrollably. This is a danger of injury for the operator and bystanders.
- ➔ Before beginning maintenance or repair work, ensure that the plate heat exchanger is empty and has reached room pressure.
- ➔ When using hot or very cold flow media there is a danger of burning, or respectively, freezing. Before beginning maintenance or repair work, always ensure that the plate heat exchanger has reached room temperature.
- ➔ Hazardous flow media (corrosive, poisonous, flammable, explosive etc.) present an acute danger of injury for the operator and bystanders. Make sure that the regulations for flow media are followed during all work.
- ➔ Ensure that the pressure plate is secured against unintended slippage (e.g. on ships).
- ➔ The plates of the heat exchanger can fall out sideways and cause severe injuries. When fitting the plates of the heat exchanger and closing the plate heat exchanger, always ensure that the heat exchanger plates do not unexpectedly loosen from the guiding bar and tip over. For this reason, at least two persons must work on a plate heat exchanger with CD frame. The reliable procedure for opening and closing a plate heat exchanger is described in the sections "Opening the plate heat exchanger and removing the plates" (page 45). or "Fitting the plates and closing the plate heat exchanger" (page 50).

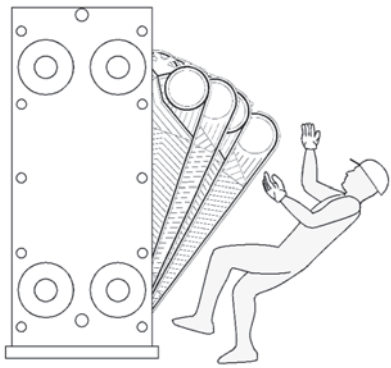

DANGER

Danger of falling over during stacking!

In the case of uncontrolled stacking, the heat exchanger plates can tumble. This causes injuries and damaged heat exchanger plates. Never stack the plates higher than:

- ➔ 60 heat exchanger plates for Varitherm/NT
- ➔ 30 cassettes for LWC
- ➔ 30 heat exchanger plates for free flow/Concitherm/Safetytherm

Before opening the plate heat exchanger you must carry out a few work steps. If necessary, remove the connected pipes.

Carry out the following work steps:

➔ Clean the guiding rail

➥ (for better plate mobility).

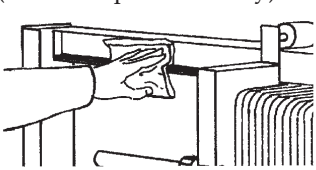

➔ Clean the threads of the tightening bolts
➥ (to remove the contamination and prevent a fretting of the nuts).

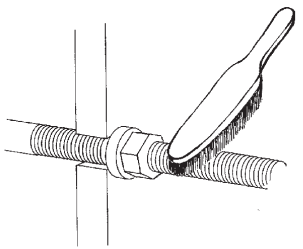

➔ Apply a thin film of oil to the thread.

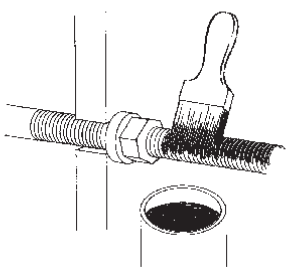

➔ To ensure that the plates are reassembled in the right order, we advise painting a diagonal line across the side of the plate pack.

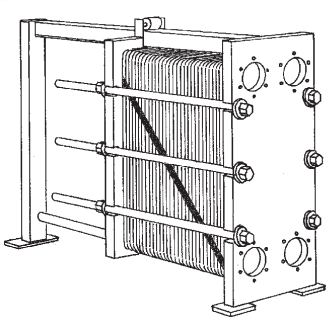

➔ Be sure to note the current "a" dimension.

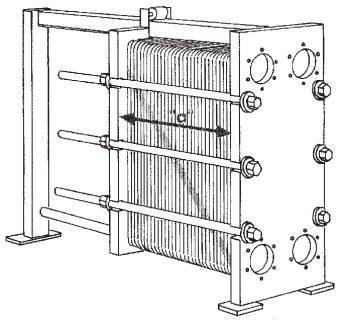

NOTE

When removing the heat exchanger plates, document the order with the help of the flow diagram.

The frames are provided with at least four clamping parts. For plate heat exchangers with more than four clamping parts, as a rule four longer clamping parts are used. These only pretension the heat exchanger plate pack (so-called pretensioning bolts).

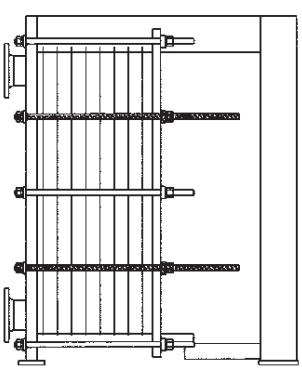

The HE plates are mounted in different ways in the frame, depending on the frame design of the plate heat exchanger.

- In CD frames the HE plates rest on the bottom guiding bar and are guided by the top.
  - In the CD frame the plates are guided by a top and a bottom guiding bar.

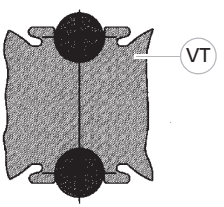

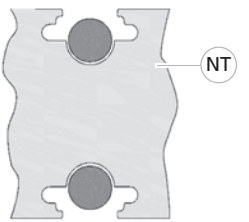

- In the B frames the heat exchanger plates are suspended at the top carrying beam with a special rail. The plates are hooked into the recess of the guiding rail and are guided by the bottom guiding bar.
  - Top carrying beam with a guiding rail and a guiding bar.

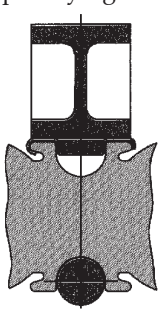

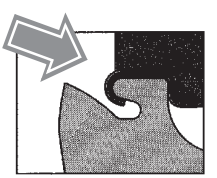

  - Top carrying beam without a guiding rail.

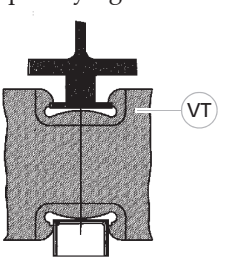

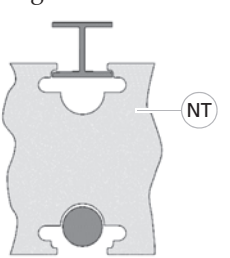

10.2 Opening the plate heat exchanger and removing the plates

NOTE

Before unfastening/opening the plate heat exchanger, observe the safety instructions in the section "Preparatory precautions" (page 40).

10.2.1 Opening plate heat exchangers with a CD frame

CD frames need to be equipped with a locking element (e.g., a pipe clamp). Ensure that the HE plates can always be set up as described as step 3 below. Attach the locking element accordingly.

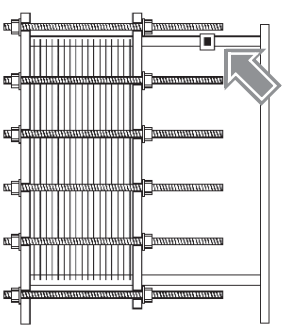

The following HE types do not require locking elements:

- VT 04
- VT 10
- VT 20

The drawings below show a CDL frame (with a support column). The handling described also applies to CDS frames (without a support column).

The CDS frames feature an extra retaining lock at the end of the upper guiding bar. This retaining lock limits the path along which the pressure plate can be moved.

Carry out the following work steps:

1. Release the nuts of the tightening bolts on the pressure plate.

➥ Release the tightening bolts evenly in small steps on alternate sides (1-2-3-4) and diagonally (1-2 and 3-4), in order to prevent overloading individual tightening bolts and tilting the pressure plate.

➥ Proceed similarly in the case of frames with more than 4 tightening bolts.

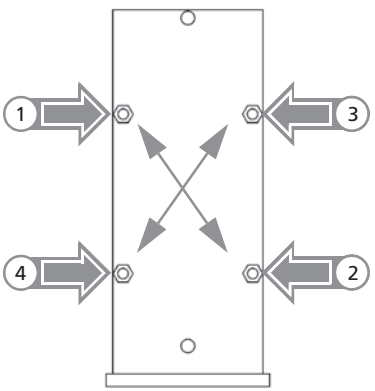

2. Remove the nuts without removing the tightening bolts. Push the pressure plate right up to the locking element.

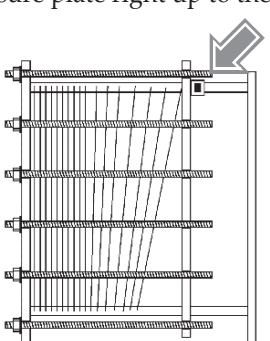

3. Move the heat exchanger plates. The HE plates must afterwards safely lean against the fixed plate.

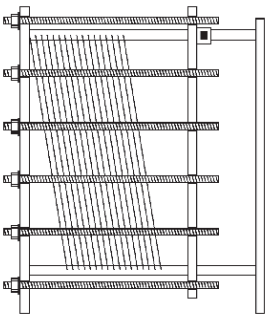

4. Now remove the tightening bolts. To secure the unit, two tightening bolts should be left in on either side of the frame.

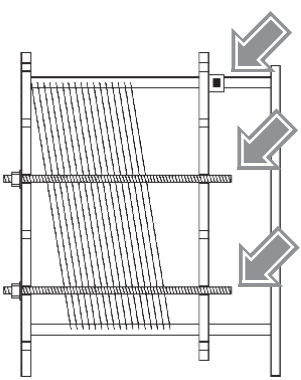

5. Mark the position of the locking element. Then move the locking element right up to the support column.

6. Move up the pressure plate to the support column. The second operator ensures that the plate pack does not slip. You can now take out the heat exchanger plates.

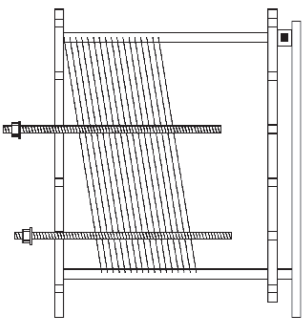

➔ The procedure is the same for CD frames without a locking element (VT 04, VT 10, VT 20).

✓ **The plate heat exchanger is opened.**

NOTE

The best position of the locking element depends on the size and number of heat exchanger plates. Please contact your GEA Ecoflex service department (see back cover) if you have any questions on this point.

10.2.2 Opening plate heat exchangers with a B frame

Carry out the following work steps:

1. Release the nuts of the tightening bolts on the pressure plate.

➥ Proceed as in item 1 in the section "Opening plate heat exchangers with a CD frame" (page 45).

2. Remove the nuts.

3. Remove all tightening bolts.

✓ **The plate heat exchanger is opened.**

10.2.3 Removing the heat exchanger plates

Carry out the following work steps:

1. Move the pressure plate right up to the support column.

➥ You now have access to the individual heat exchanger plates.

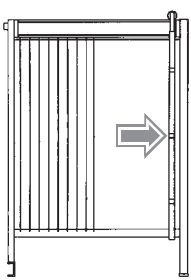

2. For removal, swing the heat exchanger plate out to the side and take it out of the guiding rail of the carrying beam.

➥ In the case of some Varitherm carrying beams, swinging is only possible to one side.

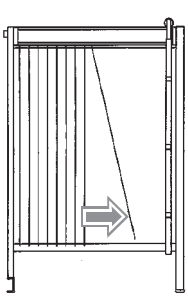

✓ **The heat exchanger plates have been removed.**

10.3 Fitting the plates and closing the plate heat exchanger

NOTE

Before the installation and before closing the plate heat exchanger, observe the safety instructions in the section "Preparatory precautions" (page 40).

DANGER

Damage to the heat exchanger plates!

If the compression dimension "a min" is underrun, this generally causes the damage of the heat exchanger plates and, as the case may be, faulty operation of the plate heat exchanger.

➔ Ensure that the plate pack is only compressed to the necessary dimension "a min." < "a" < "a max.".

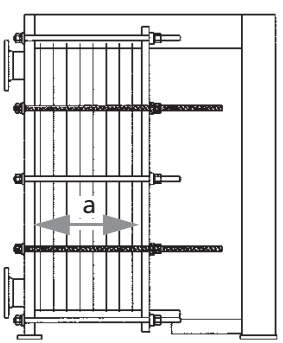

NOTE

When all the heat exchanger plates are correctly installed, the outside of the plate pack must show a continuous honeycomb pattern. You can also check that the plates are in the right order by means of the diagonal line on the outside of the plate pack, which you painted before opening the plate heat exchanger.

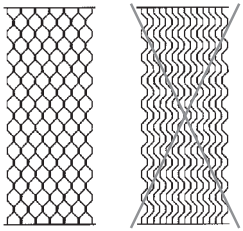

Carry out the following work steps:

1. Make sure that the gaskets and heat exchanger plates are free of foreign matter or contamination.

➥ If necessary, clean them with running water and a soft brush.

2. Check that the gaskets fit correctly in the grooves of the heat exchanger plates.

3. Clean the sealing faces of the frame gaskets.

4. For a plate heat exchanger with a B frame: Clean the plate guiding of the heat exchanger at the carrying beam and slightly lubricate them.

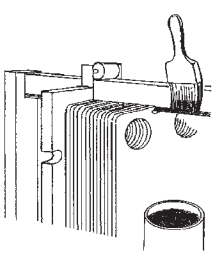

5. Clean the threads of the tightening bolts as well as the tightening nuts and apply a thin layer of grease to these.

6. Mount all the HE plates into the plate heat exchanger frame in the correct order according to the flow diagram.

In the case of a CD frame, the following actions are required:

➔ Before installing the heat exchanger plates, screw in two tightening bolts to serve as securing elements.

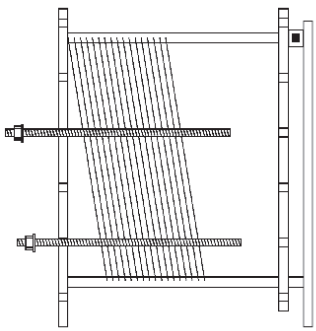

➔ Every HE plate you put in should safely lean against the fixed plate.

➔ Have another operator hold and secure the plate pack.

➔ Push the pressure plate against the plate pack and put in the remaining tightening bolts.

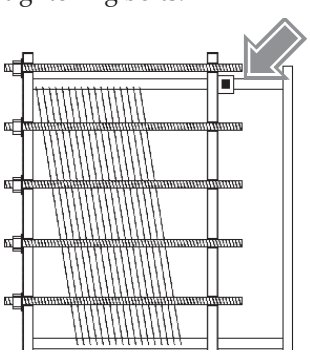

➔ Attach the locking element at the correct position.

7. Determine the required compression dimension ("a" dimension).

➥ The required compression dimension "a" is
   - in the case of a complete replacement of the gaskets: the "a max" printed on the name plate.
   - provided that the heat exchanger plates are only cleaned and no gaskets are replaced: the compression dimension written down before opening the plate heat exchanger.
   - in case of a change in the number of heat exchanger plates: The new "a max" dimension which can be gathered from the circuit diagram and the changed plate to the nameplate supplied.

8. Tighten the clamping parts according to the procedure described in the section "Opening the plate heat exchanger and removing the plates" (page 45) alternately and diagonally to the required compression dimension "a".

9. Carry out a leak test before restarting the plate heat exchanger.

NOTE

The procedure in the case of leakages is described in the chapter "Troubleshooting" (page 60).

10.4 Cleaning the plate heat exchanger

10.4.1 Cleaning the plates of the closed plate heat exchanger

Deposits on the heat exchanger plates

- impair the heat transfer between the flow-through media,
- increase the pressure loss,
- can cause or accelerate HE plate corrosion.

The particular application determines

- the necessity,
- the type and
- the frequency of a plate heat exchanger cleaning.

CIP process

CAUTION

Danger to persons and environment!

The use of aggressive cleaning agents presents poisoning, chemical burns, and burning dangers. Make sure that:

→ before the CIP process, you have been instructed in the use and have a good command of all work steps.
→ during work with aggressive cleaning agents you always wear suitable protective clothing.
→ the cleaning agent you use is completely removed from the plate heat exchanger after cleaning.

In the case of CIP ("Cleaning in Place"), a cleaning agent instead of the flow media flows through the plate heat exchanger. Contaminants are removed by the cleaning solution's dissolving capacity, supported by the mechanical action of the turbulence.

DANGER

Damage of the plate heat exchanger!

The improper use of CIP can damage the plate heat exchanger.

→ Observe the notes for chemically cleaning the heat exchanger plates in the section "Cleaning the plates of the opened plate heat exchanger" (page 56).

Backflushing

This process is used if the flow media contain coarse particles of contamination and thus block the inlet channels. By briefly reversing the direction of flow, the particles of contamination are removed from the plate heat exchanger.

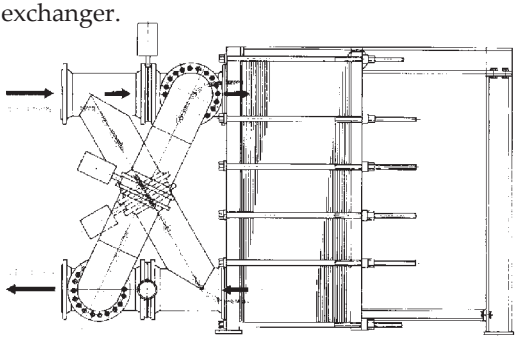

The direction of flow is reversed by using a suitable pipe configuration with the appropriate valves. If there is a risk of the released particles of contamination causing damage to the plate heat exchanger, preference should be given to manual cleaning of the heat exchanger plates.

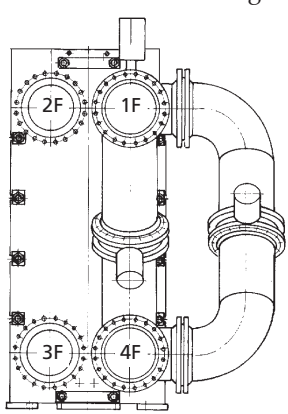

10.4.2 Cleaning the plates of the opened plate heat exchanger

Cleaning the heat exchanger plates manually

DANGER

Leakage!

Hard cleaning tools (e.g. brushes with metal bristles) can damage the metallic surfaces of the heat exchanger plates and the surfaces of the gaskets. Damaged metal surfaces can lead to corrosion of the heat exchanger plates. Damaged gasket surfaces can bring about leakages of the plate heat exchanger when it is recommissioned.

- ➔ Never use hard cleaning tools.
- ➔ At every cleaning, ensure that no particles can settle on or under the gaskets because this leads to leakages.
- ➔ Ensure that the stream of the high-pressure jet always directs face-on at the gaskets in order to avoid loosening them.

Carry out the following work steps:

1. For severely pollutions, use a high pressure cleaner nozzle first to remove the particles.

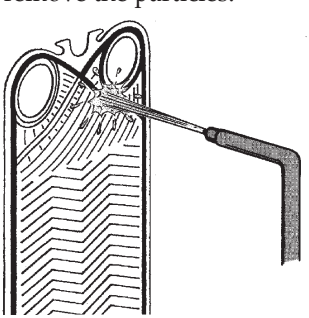

2. Wash each plate from both sides with flowing, warm water and a soft brush.

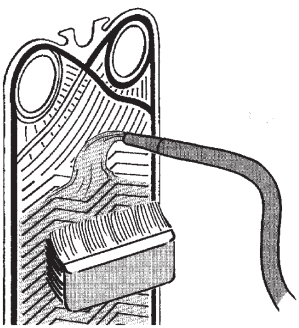

✓ **The heat exchanger plates have been cleaned manually.**

Cleaning the heat exchanger plates chemically

DANGER

Leakage!

Chemical cleaning processes can attack the gaskets materials and create leaks.

→ Always use cleaning agents that do not attack the gaskets materials.
→ Choose a suitable temperature and do not let the cleaning agent take effect on the materials for an unnecessarily long time.

Observe the following points:

- Always follow the safety instructions and recommendations of the cleaning agent manufacturer. Only use chloride-free or low-chloride water with a low hardness value for the cleaning liquid.
- Chlorides in the medium reduce the corrosion resistance of chrome-nickel steels and chrome-nickel-molybdenum steels (including Hastelloy, Incoloy and Inconel). The intensity of the effect of the chlorides depends on the temperature, concentration and pH of the medium.

- Stubborn contamination, such as coatings on the plate surface, which are not released by the above-described processes, can be loosened by soaking in an open chemical bath.
- Choose a cleaning agent suitable for the type of contamination and for the properties of the heat exchanger plates and sealing materials.
  - In any case, a confirmation by the manufacturer of the cleaning agent should be available, stating that the agent does not affect the plate and sealing materials used in the heat exchanger.
  - Clean the heat exchanger plates according to the work instructions of the cleaning product manufacturer.
- Before reassembling the cleaned heat exchanger plates, always rinse them with sufficient clean water. Remove foreign matter on the gaskets with a soft brush.

10.5 Replacing the gaskets

You can find the fixing type of the gasket in the technical documentation of the plate heat exchanger. The gaskets can be either fixed with adhesive into the gasket grooves or pressed into the grooves without adhesive.

We recommend that you always replace all gaskets at the same time. Use only original GEA Ecoflex gaskets.

NOTE

You can obtain detailed information about replacing gaskets from your GEA Ecoflex service department (see back cover).

10.6 Replacing the frame seals

The type of port ring between the heat exchanger plate pack and the frame components depends on the frame type.

NOTE

You can obtain detailed information about replacing port rings from your GEA Ecoflex service department (see back cover).

10.7 Maintaining the frame

DANGER

Loss of operating approval!

You must consult your GEA Ecoflex service department (see back cover) before changing or replacing frame components.

→ Always use the original GEA Ecoflex parts, as otherwise the operation permit for the plate heat exchanger expires.

Regularly carry out simple maintenance work, for example:

- external cleaning,
- greasing and
- repairing damage to the paintwork at the frame of the plate heat exchanger.

NOTE

You can obtain detailed information about maintenance of the frame from your GEA Ecoflex service department (see back cover).

11 Troubleshooting

In the following you will find a few typical faults that can occur during operation of a plate heat exchanger.

NOTE

On principle, you should consult your responsible GEA Ecoflex service department before eliminating faults (see last cover page), in order to prevent inappropriately performed work on the plate heat exchanger and possible consequences.

11.1 Output deficit

Fault	Cause	Remedy
Insufficient heat transfer	Deposits on the heat exchanger plates	Clean heat exchanger plates
	Flow paths, media etc. changed from the design	Have the design of the plate heat exchanger with the new operating data checked by GEA Ecoflex!
Too high-pressure loss	Flow impeded by blockage of the flow channels of the distributor	Clean heat exchanger plates
	Flow impeded by incorrect mounting of the heat exchanger plates	Check the installation order by means of the flow diagram
	Flow paths, media etc. changed from the design	Have the design of the plate heat exchanger with the new operating data checked by GEA Ecoflex!

11.2 Leakages

Fault	Cause	Remedy
sealing fault between the HE plates	false compression dimension of the plate heat exchanger	check the correct compression dimension by means of the data on the name plate
	too high working pressures	check the working pressures by means of the data on the name plate
	too high/too low working temperatures	check the working temperatures by means of the data on the name plate
	gaskets fitted incorrectly	open the plate heat exchanger and correct the gaskets' position
	gaskets are dirty	open the plate heat exchanger and clean the gaskets
	Gaskets are defective or hardened	open the plate heat exchanger and replace the gaskets
sealing fault between heat exchanger plates and frame, intermediate plates, intermediate elements	gaskets or port rings fitted incorrectly	open the plate heat exchanger, correct the position of the gaskets or port rings
	gaskets or port rings are dirty	open the plate heat exchanger, clean gaskets or port rings
	gaskets or port rings are defective	open the plate heat exchanger, replace gaskets or port rings

Fault	Cause	Remedy
sealing fault between pipe connection and frame plate	too high loads at the pipe connection due to the pipe	reduce connection loads to the admissible parameters
	seal ring fitted incorrectly	loosen the pipe connection and correct the position of the seal ring
	seal ring is dirty	loosen the pipe connection and clean the seal ring
	seal ring is defective	loosen the pipe joint and replace the seal ring
	flange connection is not sufficiently tightened	check the seal ring and connection and tighten any loose bolts
damage to the heat exchanger plates	over-tightened plate packs (compression dimension less than "a min")	replace defective heat exchanger plates
	corrosion of the HE plate material	check the design of the plate heat exchanger concerning flow-through media, consult GEA Ecoflex
damage to the start or end heat exchanger plate	incorrect earthing during welding of special connections to the open connecting pipes of the frame	replace defective heat exchanger plates

12 Technical terms

Term	Meaning
B frame	An especially stable frame design, which also allows a high number of heat exchanger plates.
Backflushing	A cleaning process in which the direction of flow is regularly reversed Reversing the direction of flow flushes the particles of contamination from the plate heat exchanger.
Carrying beam	The top component placed between the fixed plate and support column upon which the heat exchanger plates and the pressure plate are suspended. Particularity: In CD frames the carrying beam guides the heat exchanger plates.
CD frame	A compact frame design of the plate heat exchanger (compact design).. The number of heat exchanger plates that can be stacked is lower in a CD frame than in the corresponding B frame.
CIP process (Cleaning in Place)	A cleaning process in which the flow channels of the closed plate heat exchanger are flushed with specific cleaning solutions.
Clamping part	The frame component for compressing the heat exchanger plate packs. It consists of tightening bolts, tightening nuts and washers.
Collector channel	The flow channel which is created by the total passage openings of the heat exchanger plates.
Compression dimension "a" dimension ("a max."/"a min")	Dimension referring to the depressurised (!) plate heat exchanger. Tighten the heat exchanger plate pack placed between the frame plates to this dimension. Going below the "a min" dimension can damage the HE plate pack. The tightening units adjust the compression dimension.

Term	Meaning
Connection (pipe)	The pipe connections intended for the fixed plate and, if applicable, the pressure plate. The pipe connections have different designs according to each application (industrial design, rubber insert piece, metal liner, flange connection etc.).
connection corner (pipe)	Component of the intermediate element in the heat exchanger plate pack. With this intermediate element, multi-stage designs of a plate heat exchanger are realised. The connection corners allow the connection of additional pipes/media (especially for food applications).
Distributor channel	See "Collector channel"
EcoLoc	A fixing system without adhesive for gaskets of the NT series.
Fixed plate	The basic component of the plate heat exchanger frame. The fixed plate is an unmovable frame plate. Normally, the pipes are connected to this component.
Flow-through media	The term for the media that are responsible for the heat transfer in the plate heat exchanger.
Frame plates	The fixed plate and the pressure plate of the plate heat exchanger frame.
Gasket of the HE plates	An elemental component for sealing the flow channels from each other and between the heat exchanger plates and the surroundings or leakage chamber. There are gaskets that are fixed to the heat exchanger plates with adhesive or without adhesive (LocIn, EcoLoc).
Guiding bar	Component that guides the heat exchanger plates and the pressure plate at the bottom. Particularity: In CD frames the heat exchanger plates rest on the bottom guiding bar.
Heat exchanger plate pack	The collective term for all of the heat exchanger plates located between the frame plates, including the gaskets.
Heat exchanger plates	An elemental component that keeps the flow media separated from each other and transfers the heat.

Term	Meaning
Intermediate element	A component placed within the heat exchanger plate pack. The intermediate element has pipe connections along the sides for multi-stage plate heat exchanger designs.
Intermediate plate	A component placed within the heat exchanger plate pack. The intermediate plate has no pipe connections and is used for special multi-pass plate heat exchanger designs.
LocIn	A fixing system without adhesive for some elastomer gaskets.
Metal liner	A liner of the frame plates in the area of the pipe connections. The material used depends on the application (stainless steel, titanium, etc.).
Multi-pass plate heat exchanger	A special design of the plate heat exchanger with internal deflection of the flow-through media. The construction of multi-pass plate heat exchanger always demands pipe connections to the pressure plate.
Multi-stage plate heat exchanger	A special design of the plate heat exchanger with more than two flow media (use of intermediate elements). With this plate heat exchanger design, complex heat transfer tasks are combined in one plate heat exchanger (heating and cooling, e. g. in the food stuff industry).
Nameplate	A label attached to the fixed plate of the PHE frame for identification with the basic data of the PHE (also designed as adhesive label).
PHE	The short form of the term Plate Heat Exchanger.
Pressure plate	A movable frame plate suspended at the carrying beam of the plate heat exchanger frame. his frame plate compresses the heat exchanger plate pack. The pressure plate can have pipe connections.
Rubber insert piece	A liner of the frame plates (elastomer) in the area of the pipe connections. It seals off the pipe connection and the heat exchanger plate pack.

Term	Meaning
Single-pass plate heat exchanger	The standard design of a plate heat exchanger with two flow-through media. Normally, the connections are placed on the fixed plate.
Splash protector	A safety device attached to the heat exchanger plate pack. GEA Ecoflex generally recommends attaching a splash protector when using hazardous media.
Support column	A fixed component of a PHE frame to which the carrying beam and the guiding bar are fixed.
Suspending (the pressure plate)	Suspending the pressure plate at the carrying beam (normally with a movable roller). The suspension makes it possible to move the pressure plate on the carrying beam.

Notes

Notes

Notes

Notes

GEA PHE Systems
Competence in Heat Transfer

With emphasis on the highest quality standards and constant innovations, GEA PHE Systems continues to expand its market position: Within the GEA Heat Exchangers segment, GEA Ecoflex together with GEA WTT, GEA PHE Systems Asia Pacific, GEA PHE Systems North America and GEA EcoServe forms GEA PHE Systems, the Center of Competence and Service Center for gasketed, fully welded and brazed plate heat exchangers of GEA Group.

- HVAC
- Refrigeration
- Sugar
- Chemical
- Paper
- Food
- Power
- Marine
- Heavy Industry
- Renewable Energy



Argentina	Canada	Estonia	Guatemala	Italy	Mauritius	Portugal	Spain	The Netherlands
Australia	Chile	Finland	Hungary	Korea	New Zealand	Russia	Sri Lanka	Turkey
Austria	China	France	India	Latvia	Pakistan	Serbia	Sweden	UAE
Belgium	Colombia	Germany	Indonesia	Lithuania	Peru	Singapore	Switzerland	Ukraine
Brazil	Croatia	Great Britain	Iran	Luxembourg	Philippines	Slovenia	Taiwan	USA
Bulgaria	Denmark	Greece	Israel	Malaysia	Poland	South Africa	Thailand	Venezuela

Contact details at:

www.gea-phe.com

Technical modifications reserved · OM_Gasketed_EN_20122011 · dieverbestrategen · 04/12 Caskey

The specifications contained in this printing unit are intended only to serve the non-binding description of our products and services and are not subject to guarantee. Binding specifications, especially pertaining to performance data and suitability for specific operating purposes, are dependent upon the individual circumstances at the operation location and can, therefore, only be made in terms of precise requests.

Your contact:

GEA Heat Exchangers

PHE Systems

GEA Heat Exchangers, Inc. PHE Division
100 GEA Drive, York, PA 17406 USA
Tel: 1-717-268-6200 · 1-800-774-0474
Fax: 1-717-268-6162
info.phe-systems.usa@geagroup.com
www.gea-phe.com/usa

PHE Systems

GEA Canada, Inc.
30 Via Renzo Drive, Suite 266
Richmond Hill, ON L4S 0B8 Canada
Tel: 1-647-933-4500, Fax: 1-647-933-2909
info.phe-systems.canada@geagroup.com
www.gea-phe.com/canada