A2 DO NOT SCALE THIRD ANGLE PROJECTION IF IN DOUBT ASK

This document is protected by copyright and the design it contains is protected by both copyright and design rights. All such rights being owned by ICG (UK) Limited. This document may also contain information which is confidential to ICG (UK) Limited. Neither this document nor the design or information which it contains may therefore be used, sold, licensed, transferred, copied, lent, disclosed in any third party or otherwise reproduced in whole or in part in any manner or form other than with the prior written consent of the company.

(20) ICG (UK) Limited. All Rights Reserved "

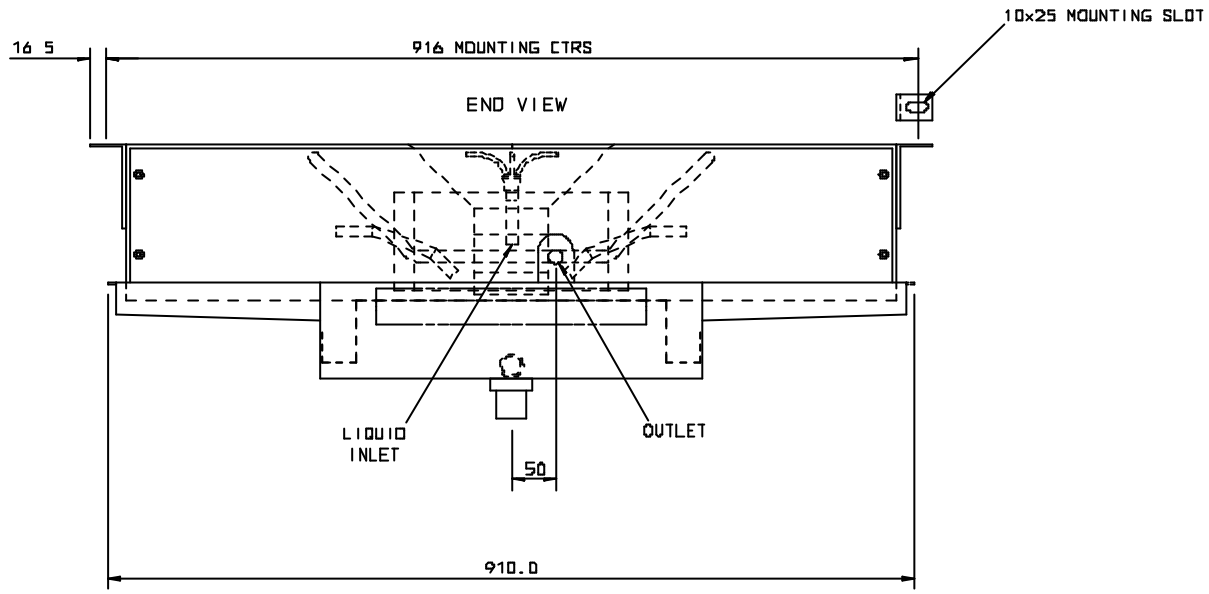

UNIT	CONNECTIONS INLET	CONNECTIONS OUTLET	WEIGHT KGS
DSR 36	1/2" OD	7/8" OD	79 KG
DSR 42	1/2" OD	7/8" OD	85 KG

MOTORS
ELEC SUPPLY 220/240V-1PH-50/60HZ
2 SPEED : 750 & 1325RPM

FANS (PROPELLOR)
Ø 305mm 5 BLADE 24° CW (50HZ)
Ø 305mm 5 BLADE 20° CW (60HZ)

ELECTRIC DEFROST
SUPPLY 220/240V-1PH 50/60HZ
DRAINTRAY : 2 x HEATERS ˜ 1450W EACH

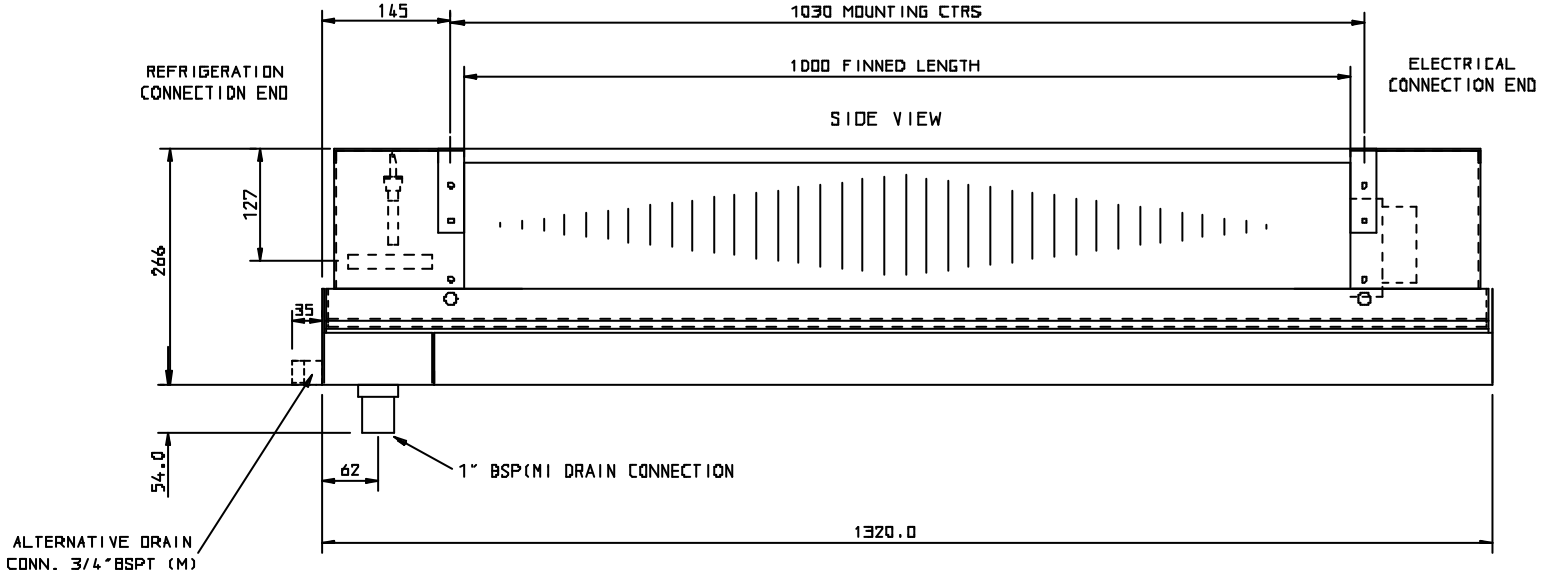

ISS	MODIFICATION	SCN	DATE
2	HINGED DRAIN TRAYS REMOVED	-----	10/02/00

SCALE 0.25:1
DATE 10/02/00
DRAWN CAJ
CHECKED
TOLS UNLESS OTHERWISE STATED
MATERIAL
FINISH
PART S/O DSR 36 & 42
FOR N/A
JOB No N/A

searle MANUFACTURING COMPANY
NEWGATE LANE FAREHAM HANTS PO14 1AR

PART No 214-801
ISS 02
DRG. FILE REF 214-801

A2 DO NOT SCALE THIRD ANGLE PROJECTION IF IN DOUBT ASK

"This document is protected by copyright and the design it contains is protected by both copyright and design rights. All such rights are reserved by ICB (UK) Limited. This document may also contain information which is confidential to ICB (UK) Limited. Neither this document nor the designs or information which it contains may therefore be used, disclosed, transferred, copied or otherwise dealt with by any third party or allowed to be so dealt with by any person without the prior written consent of ICB (UK) Limited.

©[20] ICB (UK) Limited. All Rights Reserved "

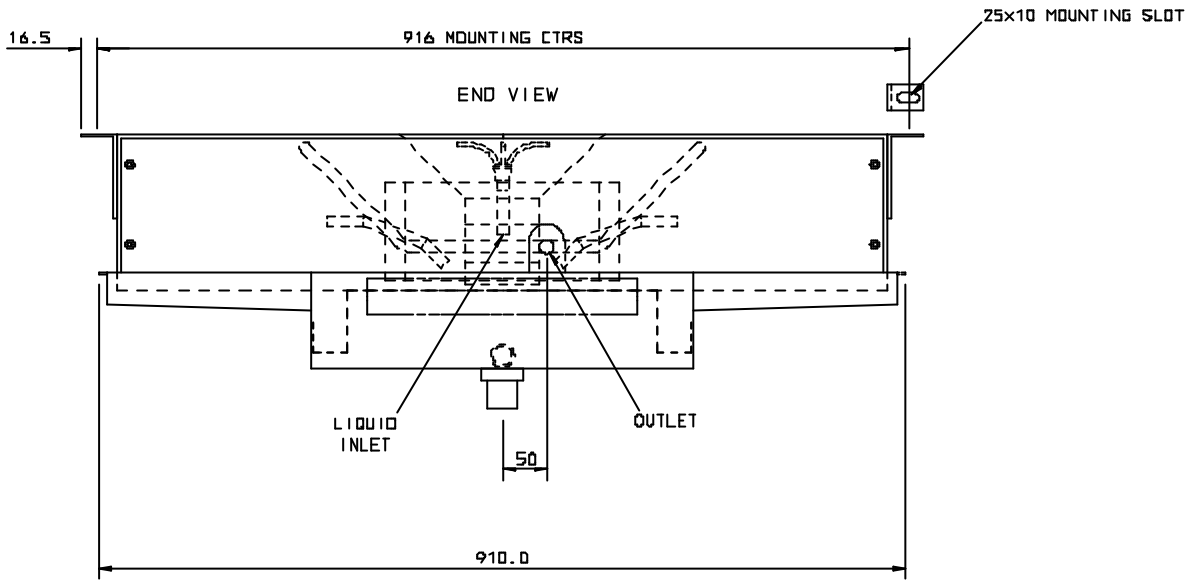

UNIT	CONNECTIONS INLET	CONNECTIONS OUTLET	WEIGHT KGS
DSR 12	1/2" OD	1/2" OD	52 KG
DSR 19	1/2" OD	5/8" OD	56 KG
DSR 22	1/2" OD	5/8" OD	59 KG

MOTORS
ELEC SUPPLY 220/240V-1PH-50/60HZ
2 SPEED : 750 & 1325RPM

FANS (PROPELLOR)
Ø 305mm 5 BLADE 24° CW (50HZ)
Ø 305mm 5 BLADE 20° CW (60HZ)

ELECTRIC DEFROST
SUPPLY 220/240V-1PH 50/60HZ
DRAINTRAY : 2 x HEATERS " 800W EACH

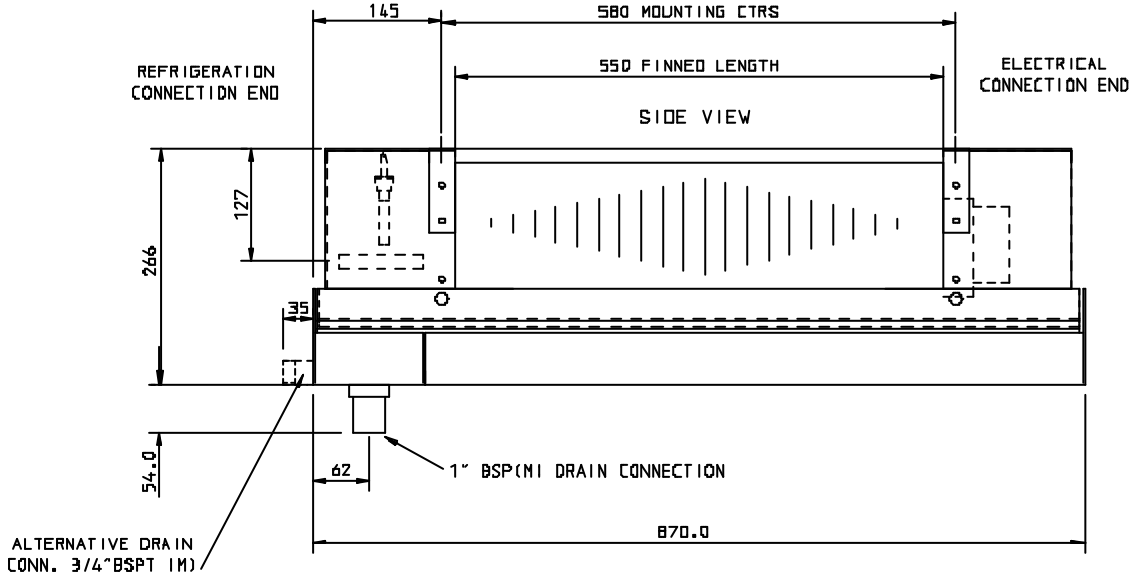

ISS	MODIFICATION	SEN	DATE
2	HINGED DRAIN TRAYS REMOVED	----	10-02-00

SCALE 0.25:1 | DATE 25/08/00 | DRAWN CAJ | CHECKED CAJ
TOLS (UNLESS OTHERWISE STATED) | MATERIAL | FINISH
PART SALES OUTLINE DSR12 TO 22
FOR N/A | JOB No N/A

Searle MANUFACTURING COMPANY NEWGATE LANE FAREHAM HANTS PO14 1AB

PART No 211-801 ISS 02
ORG. FILE REF 211-801

A2 DO NOT SCALE THIRD ANGLE PROJECTION IF IN DOUBT ASK

"This document is protected by copyright and the design it contains is protected by both copyright and design right. All such rights being owned by ICG (UK) Limited. This document may also contain information which is confidential to ICG (UK) Company. Neither this document nor the design or information which it contains may therefore be used, sold, licensed, transferred, copied, lent, disclosed in any third party or otherwise reproduced in whole or in part in any manner or form other than with the prior written consent of the company.

(20) ICG (UK) Limited. All Rights Reserved "

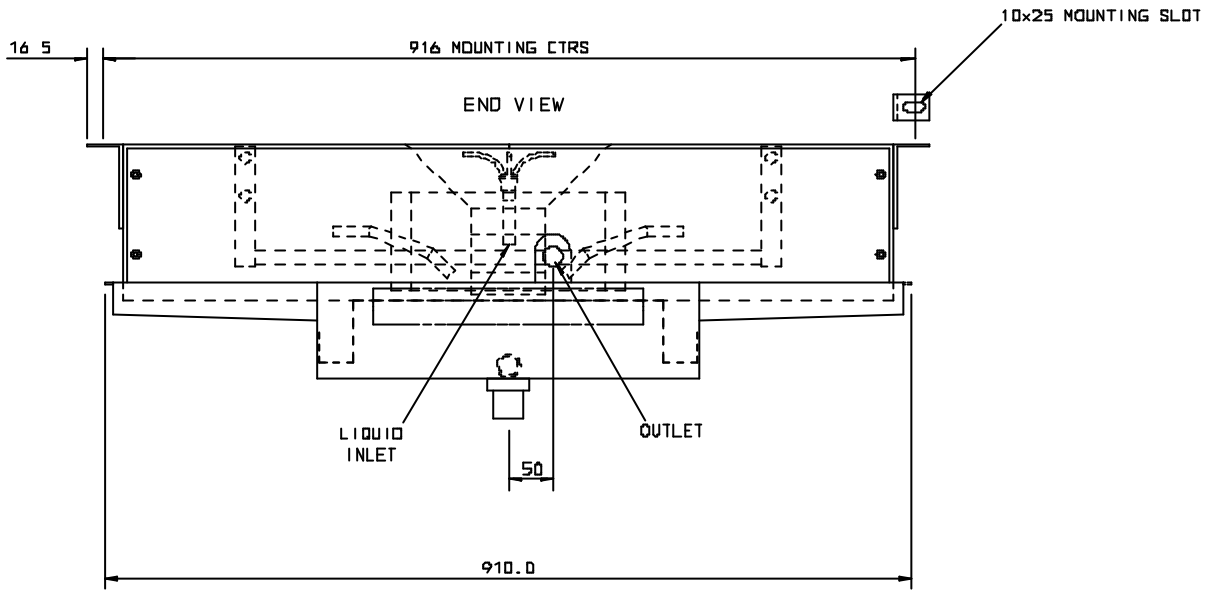

UNIT	CONNECTIONS INLET	CONNECTIONS OUTLET	WEIGHT KGS.
DSR 51	1/2" OD	7/8" OD	104 KG
DSR 62	1/2" OD	1 1/8" OD	113 KG

MOTORS
ELEC SUPPLY 220/240V-1PH-50/60HZ
2 SPEED : 750 & 1325RPM

FANS (PROPELLOR)
Ø 305mm 5 BLADE 24° CW (50HZ)
Ø 305mm 5 BLADE 20° CW (60HZ)

ELECTRIC DEFROST
SUPPLY 220/240V-1PH 50/60HZ
DRAINTRAY : 2 x HEATERS ˜ 2170W EACH

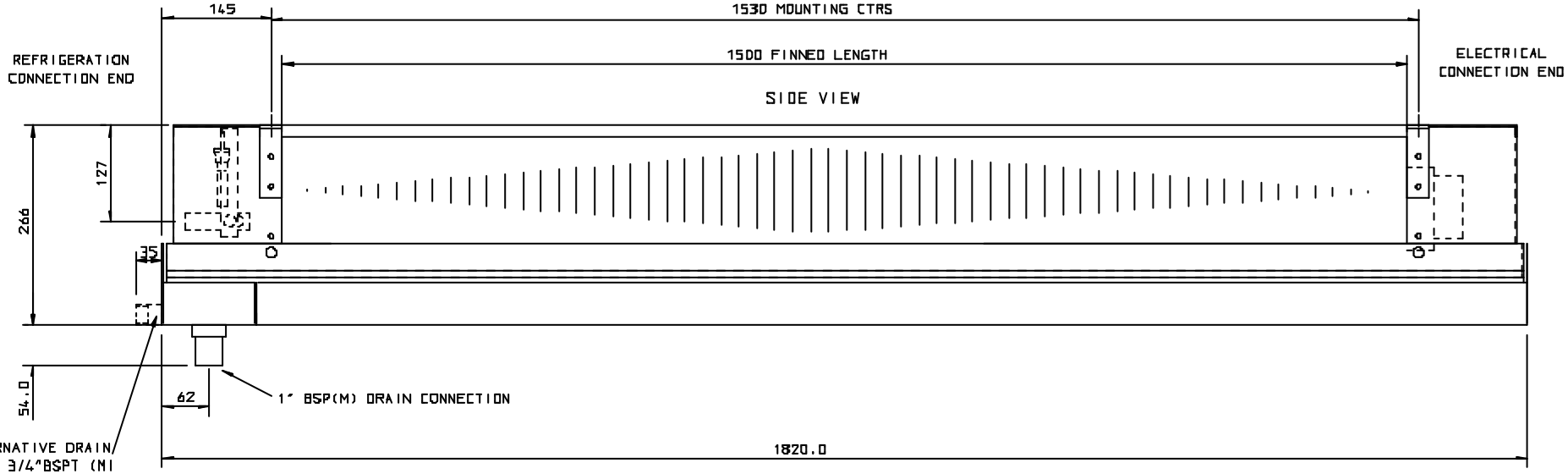

ISS	MODIFICATION	SCN	DATE
2	HINGED DRAIN TRAYS REMOVED	-----	10/02/00

SCALE 0.25:1
DATE 27/06/95
DRAWN CAJ
CHECKED
TOLS UNLESS OTHERWISE STATED
MATERIAL
FINISH
PART S/O DSR 51 & 62
FOR N/A
JOB No N/A

searle MANUFACTURING COMPANY
NEWGATE LANE FAREHAM HANTS PO14 1AR

PART No 216-801
ISS 02
DRG. FILE REF 216-801

A2 DO NOT SCALE THIRD ANGLE PROJECTION IF IN DOUBT ASK

"This document is protected by copyright and the design it contains is protected by both copyright and design rights. All such rights are reserved by ICG (UK) Limited. This document may also contain information which is confidential to ICG (UK) Limited. Neither this document nor the design or information which it contains may therefore be used, disclosed, reproduced, copied, lent, stored or made available by any means whatsoever or otherwise communicated in whole or in part in any manner or form other than with the prior written consent of that company.

©2011 ICG (UK) Limited. All Rights Reserved"

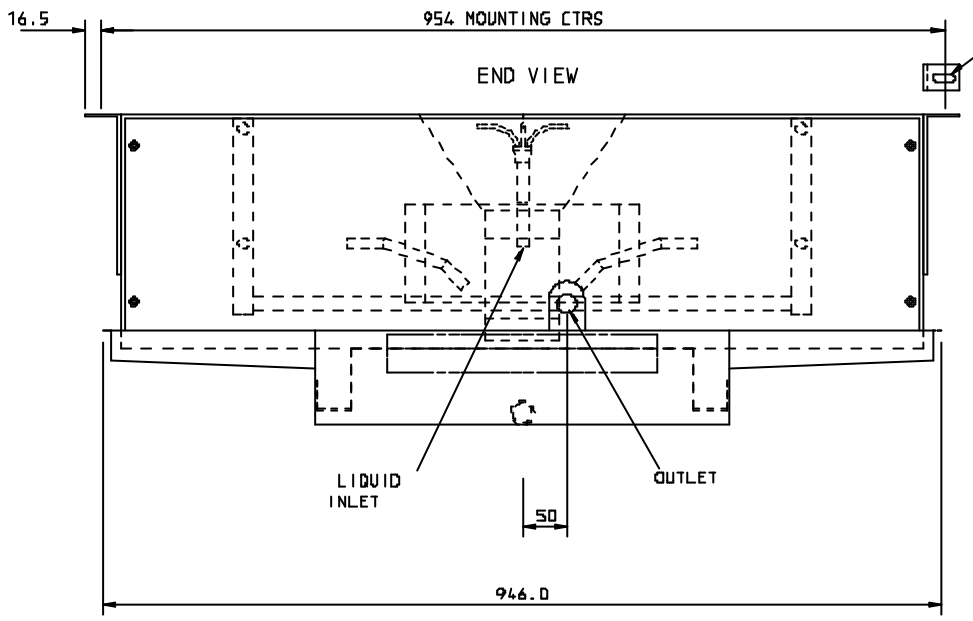

UNIT	CONNECTIONS		WEIGHT KGS.
	INLET	OUTLET	
DSR 105	5/8" OD	1 3/8" OD	155 KG
DSR 120	5/8" OD	1 3/8" OD	172 KG

MOTORS
ELEC SUPPLY 220/240V-1PH-50/60HZ
4 POLE ~ 130W 1400 RPM
6 POLE ~ 60W 850 RPM

FANS
4 POLE Ø350 5 BLADE
6 POLE Ø360 3 BLADE

ELECTRIC DEFROST
SUPPLY 380/420V-3PH 50/60HZ
DRAINTRAY : 2 x HEATERS " 2900W EACH
BLOCK : 2 x HEATERS " 1000W EACH

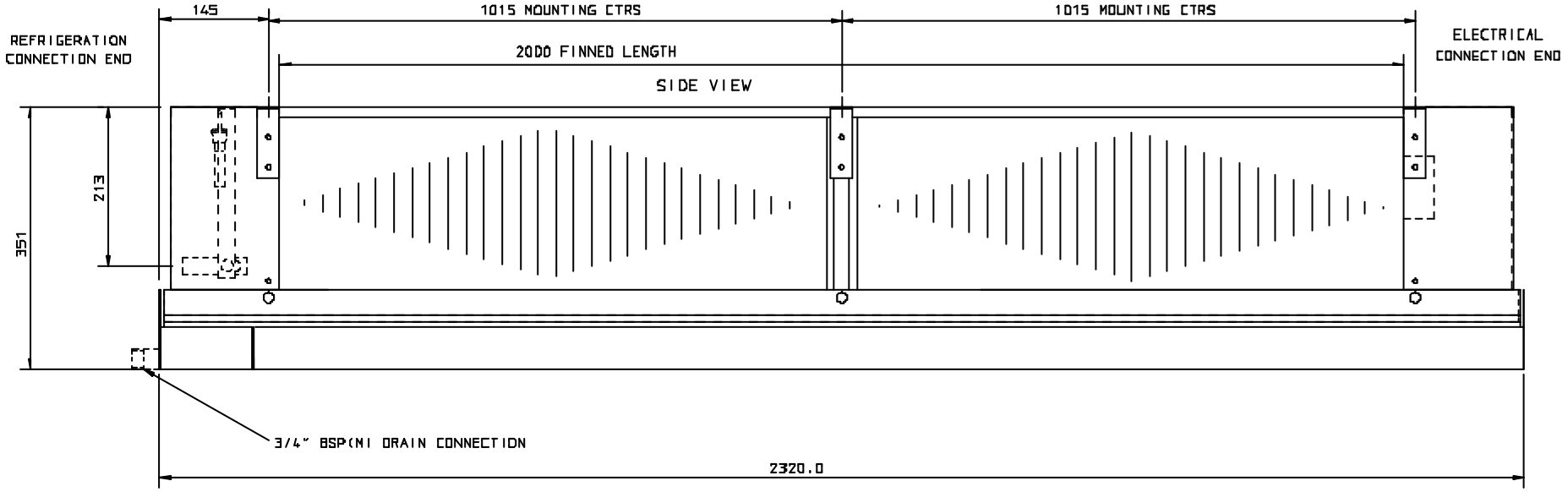

ISS	MODIFICATION	SEN	DATE

SCALE 0.25:1
DATE 10/02/00
DRAWN DJM CHECKED DJM
TOLS (UNLESS OTHERWISE STATED) MATERIAL FINISH
PART S/O DSR105 & 120
FOR N/A JOB No N/A

Searle MANUFACTURING COMPANY
NEWGATE LANE FAREHAM HANTS PO14 1AB
PART No 223-801 ISS 01
ORG. FILE REF 223-801

A2 DO NOT SCALE THIRD ANGLE PROJECTION IF IN DOUBT ASK

This document is protected by copyright and the design it contains is protected by both copyright and design right. All such rights being owned by ICG (UK) Limited. This document may also contain information which is confidential to Carl Company. Neither this document nor the design or information which it contains may therefore be used solely, licensed, transferred, copied, lent, disclosed in any third party or otherwise reproduced in whole or in part in any manner or form other than with the prior written consent of the company.

(20] ICG (UK) Limited. All Rights Reserved "

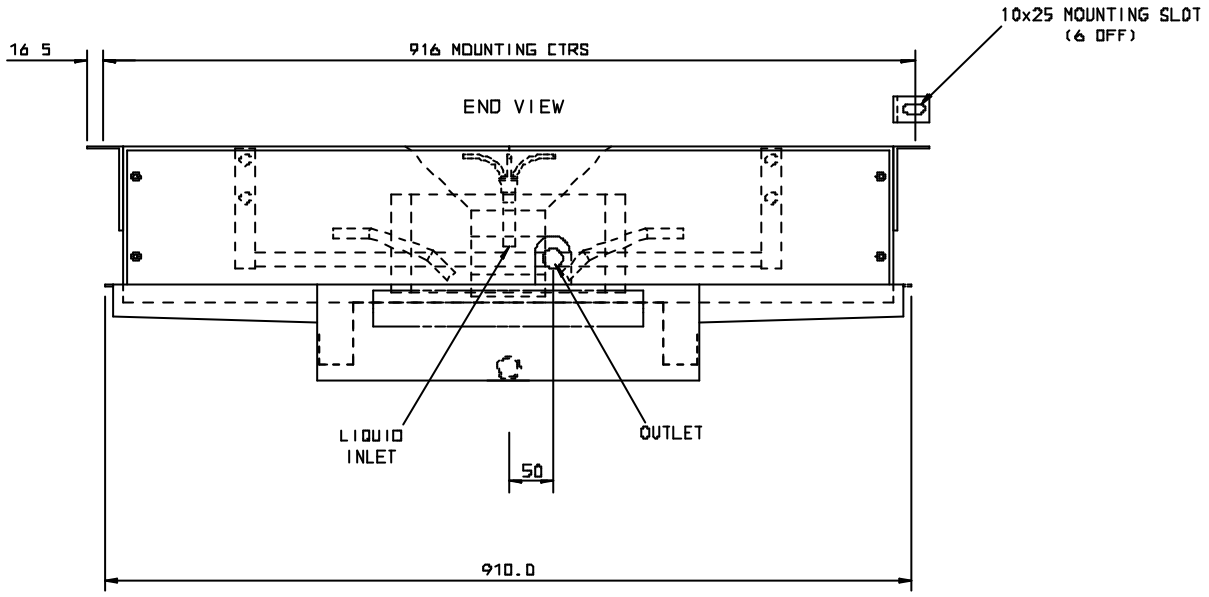

UNIT	CONNECTIONS INLET	CONNECTIONS OUTLET	WEIGHT KGS.
DSR 68	1/2" OD	1 1/8" OD	132 KG
DSR 83	1/2" OD	1 1/8" OD	144 KG

MOTORS
ELEC SUPPLY 220/240V-1PH-50/60HZ
2 SPEED : 750 & 1325RPM

FANS (PROPELLOR)
Ø 305mm 5 BLADE 24° CW (50HZ)
Ø 305mm 5 BLADE 20° CW (60HZ)

ELECTRIC DEFROST
SUPPLY 220/240V-1PH 50/60HZ
DRAINTRAY : 2 x HEATERS ˜ 2900W EACH

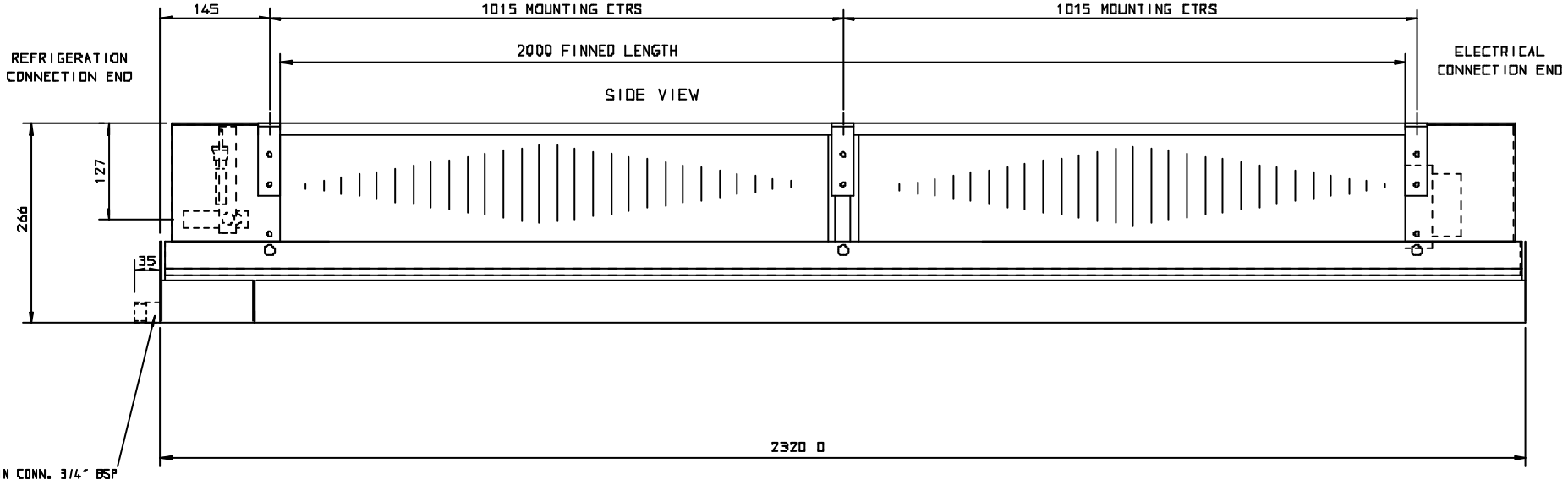

ISS	MODIFICATION	SCN	DATE
2	HINGED DRAIN TRAYS REMOVED	-----	10/02/00

SCALE 0.25:1
DATE 10/02/00
DRAWN CAJ
CHECKED LB
TOLS UNLESS OTHERWISE STATED
MATERIAL
FINISH
PART S/O DSR 68 & 83
FOR N/A
JOB No N/A

searle MANUFACTURING COMPANY
NEWGATE LANE FAREHAM HANTS PO14 1AR

PART No 218-801
ISS 02
DRG. FILE REF 218-801

A2 DO NOT SCALE THIRD ANGLE PROJECTION IF IN DOUBT ASK

This document is protected by copyright and the design it contains is protected by both copyright and design rights. All such rights are reserved by ICB (UK) Limited. This document may also contain information which is confidential to ICB (UK) Limited. Neither this document nor the designs or information which it contains may therefore be used, disclosed, reproduced, copied, stored, transmitted or in any other manner dealt with in any way without the prior written consent of that company.

© [20] ICB (UK) Limited. All Rights Reserved

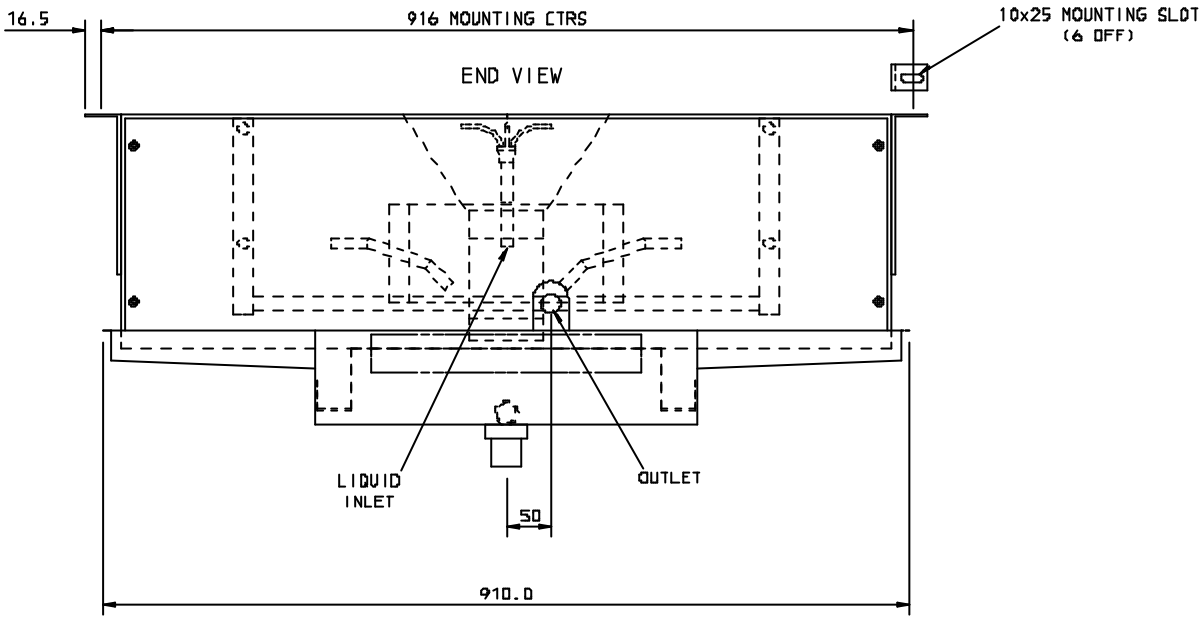

UNIT	CONNECTIONS		WEIGHT
	INLET	OUTLET	KGS.
DSR 100	5/8" OD	1 3/8" OD	155 KG
DSR 116	5/8" OD	1 3/8" OD	172 KG

MOTORS
ELEC SUPPLY 220/240V-1PH-50/60HZ
70W 1400 RPM (NOM)

FANS (PROPELLOR)
Ø305mm 4 BLADE 32° CW (50HZ)
Ø305mm 4 BLADE 26° CW (60HZ)

ELECTRIC DEFROST
SUPPLY 380/420V-3PH 50/60HZ
DRAINTRAY : 2 x HEATERS " 2900W EACH
BLOCK : 2 x HEATERS " 1000W EACH

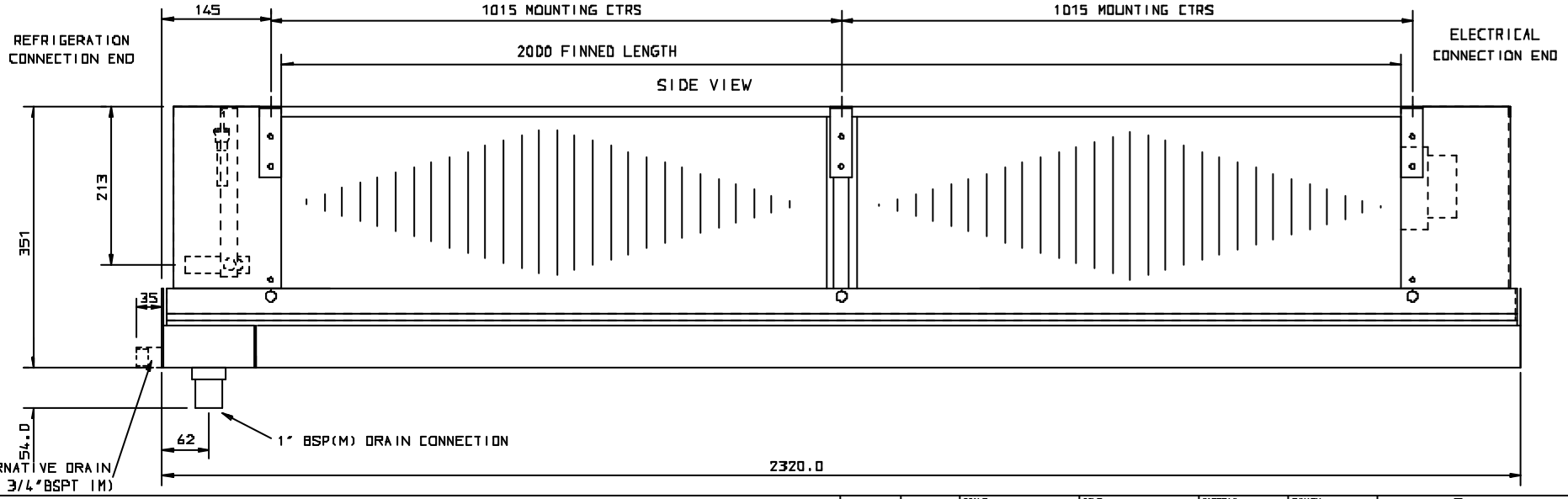

ISS	MODIFICATION	SEN	DATE
2	HINGED DRAIN TRAYS REMOVED	----	10/02/00

SCALE 0.25:1
DATE 10/02/00
DRAWN CAJ
CHECKED
TOLS UNLESS OTHERWISE STATED
MATERIAL
FINISH
PART S/D DSR100 & 116
FOR N/A
JOB No N/A

Seagrle MANUFACTURING COMPANY
NEWGATE LANE FAREHAM HANTS PO14 1AB

PART No 221-801 ISS 02
ORG. FILE REF 221-801