Mounting Guide

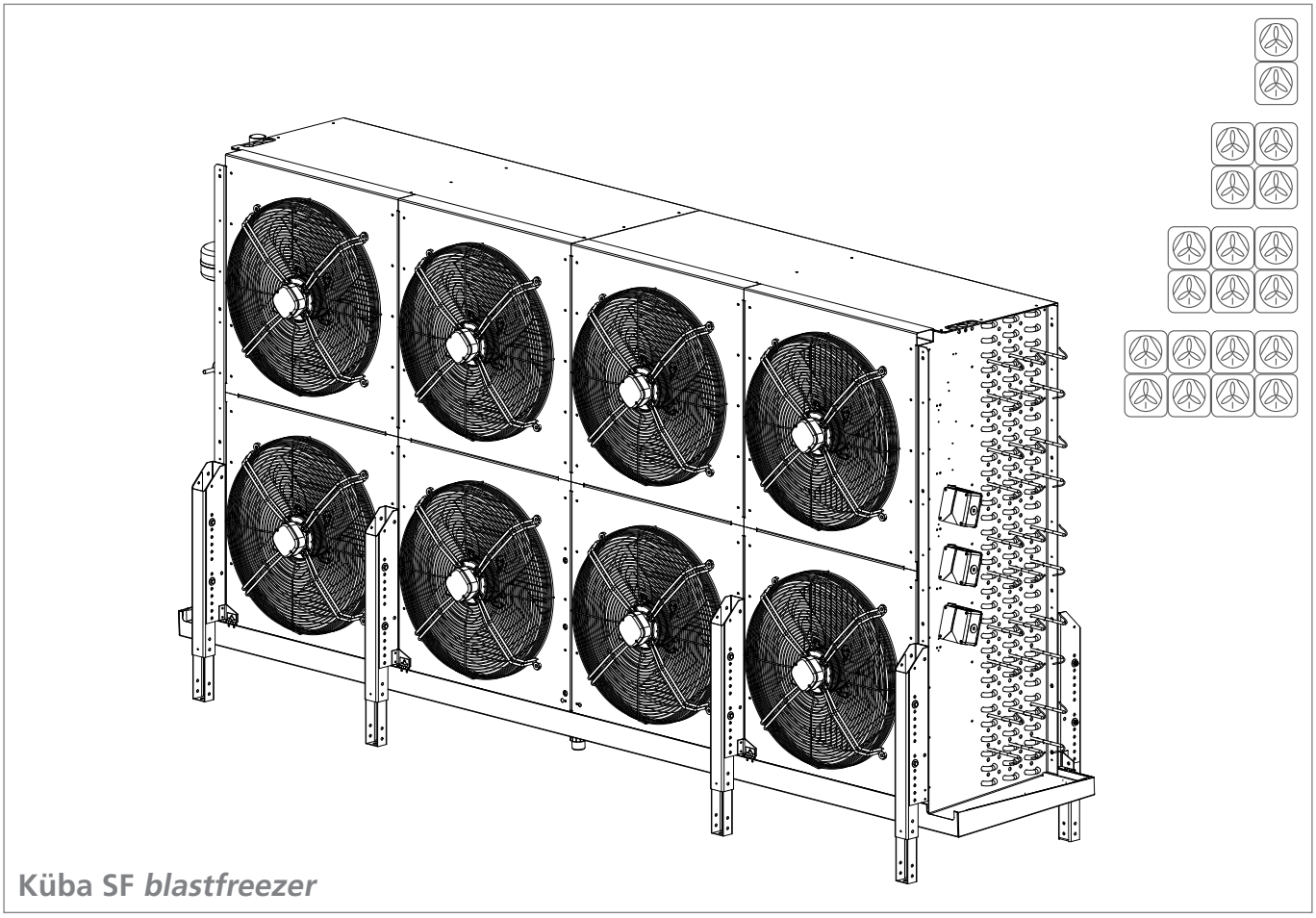

Küba SF *blastfreezer*

Mounting Guide
Page 2-4

- Dimensions
- Weights
- Assembly

Electrical wiring
Page 5-9

- Motor wiring diagram
- Electrical defrosting wiring diagram
- Cabling

SF blastfreezer

Dimensions

Weights

	Type	W ±5	E1 ±5	E2 ±5	E3 ±5	Weight
		mm	mm	mm	mm	kg net
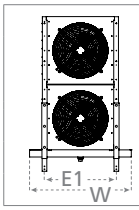	SFB 56-F42 C	1210	854	–	–	168
	SFK 56-F42 C	1210	854	–	–	163
	SFL 56-F42 C	1210	854	–	–	159
	SFB 56-F62 C	1210	854	–	–	200
	SFK 56-F62 C	1210	854	–	–	192
	SFL 56-F62 C	1210	854	–	–	187
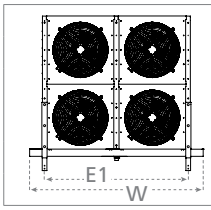	SFB 56-F44 C	2010	1654	–	–	287
	SFK 56-F44 C	2010	1654	–	–	276
	SFL 56-F44 C	2010	1654	–	–	269
	SFB 56-F64 C	2010	1654	–	–	346
	SFK 56-F64 C	2010	1654	–	–	330
	SFL 56-F64 C	2010	1654	–	–	320
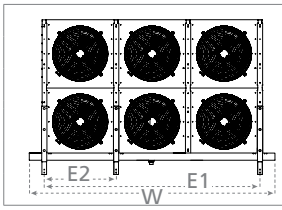	–	–	–	–	–	–
	–	–	–	–	–	–
	–	–	–	–	–	–
	SFB 56-F66 C	2810	2454	800	–	497
	SFK 56-F66 C	2810	2454	800	–	473
	SFL 56-F66 C	2810	2454	800	–	457
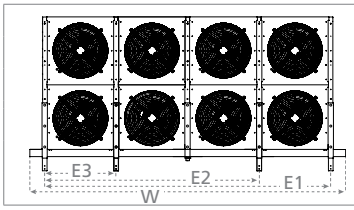	–	–	–	–	–	–
	–	–	–	–	–	–
	–	–	–	–	–	–
	SFB 56-F68 C	3610	3254	800	2400	669
	SFK 56-F68 C	3610	3254	800	2400	637
	SFL 56-F68 C	3610	3254	800	2400	616

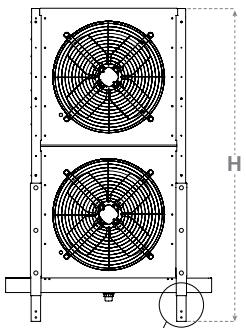

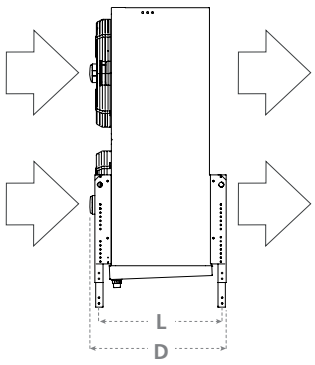

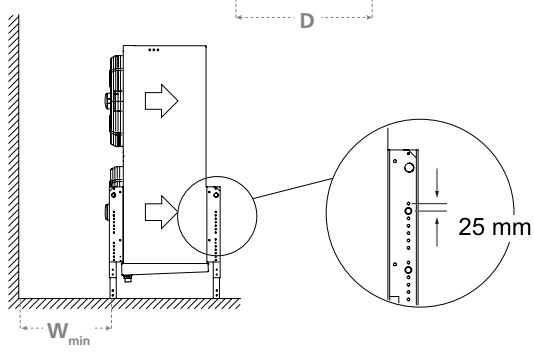

H = 1838 mm
H_{min} = 1813 mm
H_{min} = 1963 mm
ΔH = 25 mm

D = 836 mm
D = 782 mm (with V1.60)

W_{min} = 400 mm
W_{min} = 650 mm (with V1.60 & V3.10)

Assembly

1

1.1

1.2

1.3

1.4

1.5

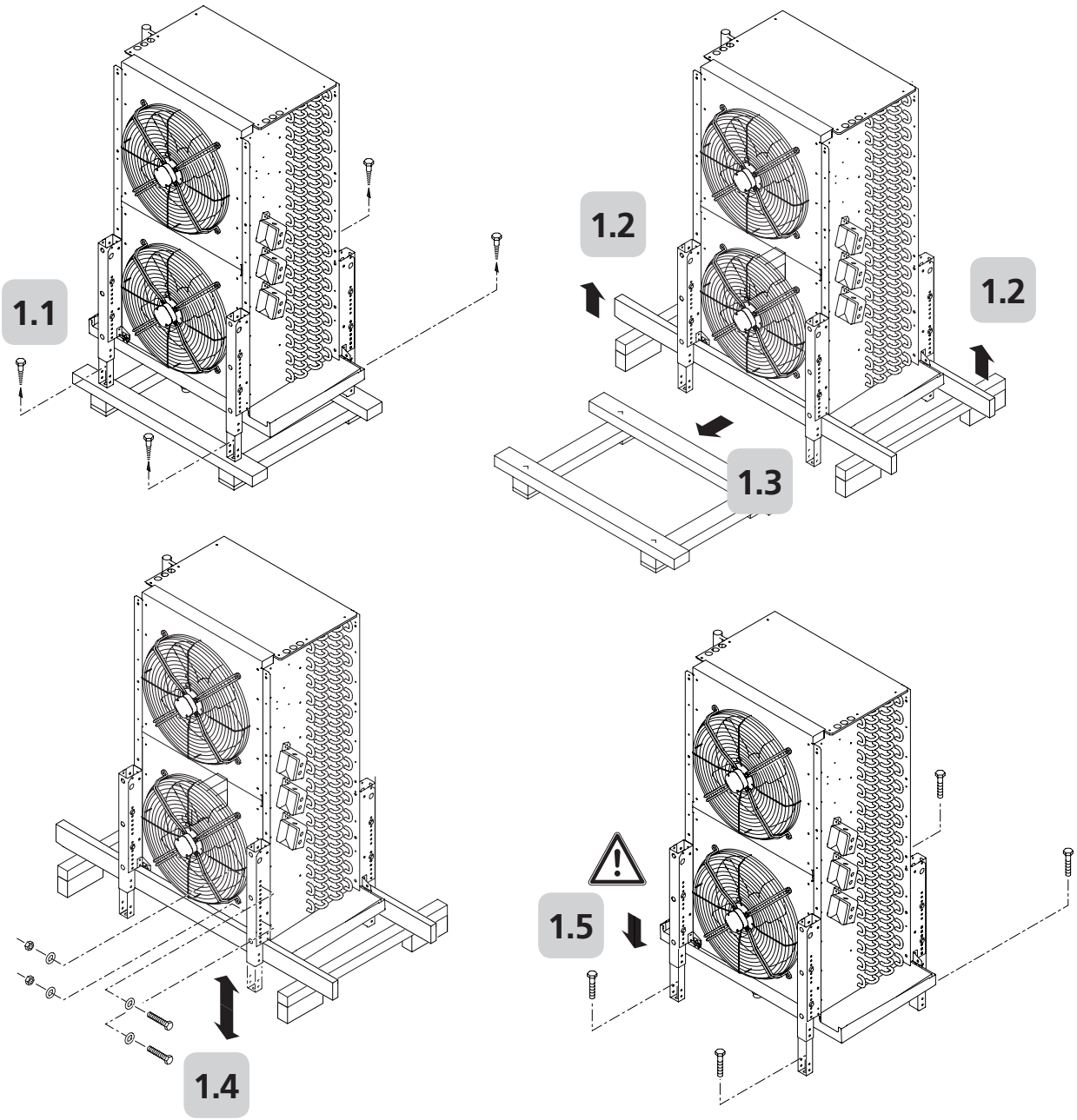

2

2.1

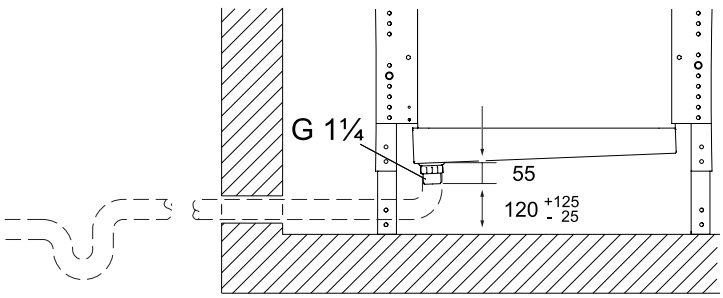

Assembly

3

3.1

3.2

3.3

3.4

3.5

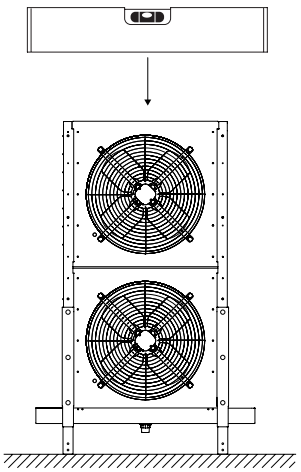

SF	ø mm	ø mm
56 F42 C	15	35
56 F62 C	22	42
56 F44 C	22	42
56 F64 C	28	54
56 F66 C	2 x 22	2 x 42
56-F68 C	2 x 22	2 x 54

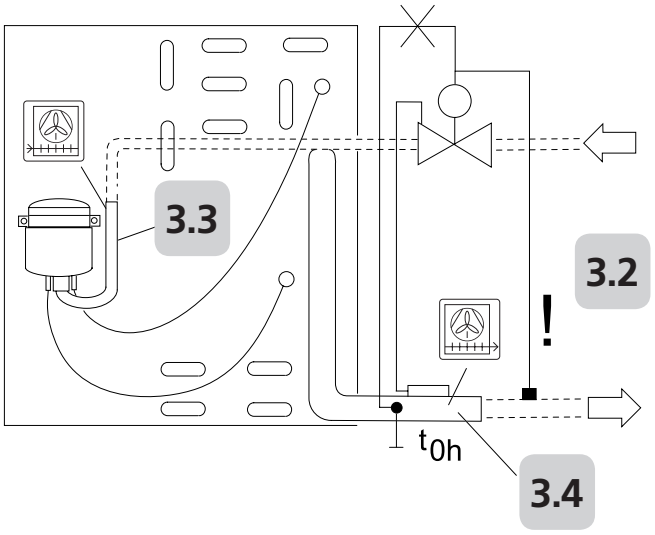

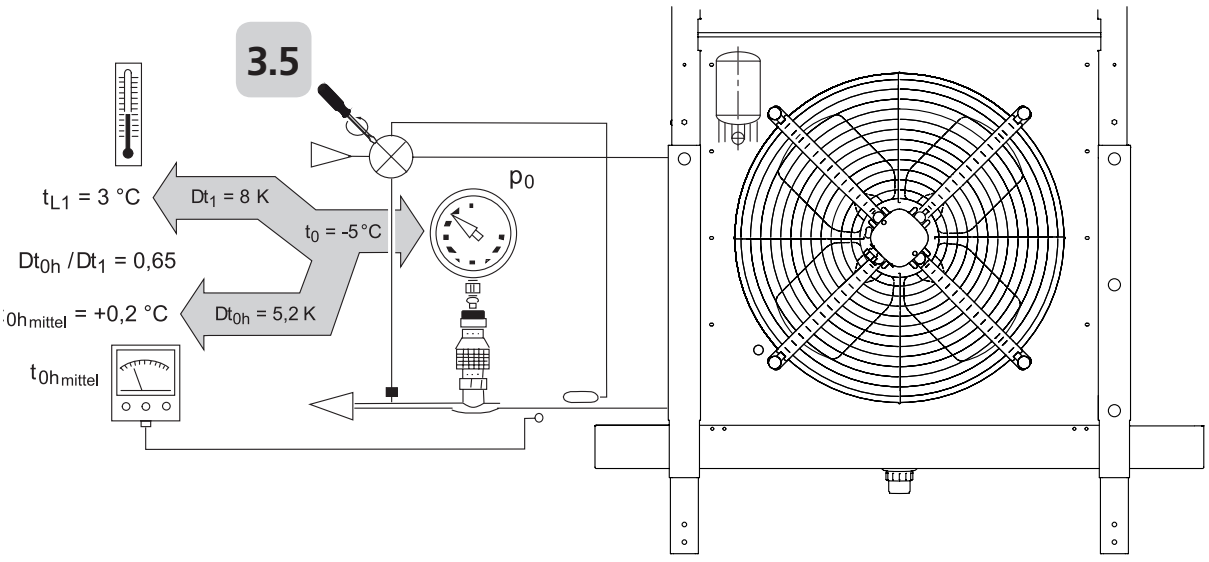

Electrical wiring

GEA Küba Blue Line
Aircoolers

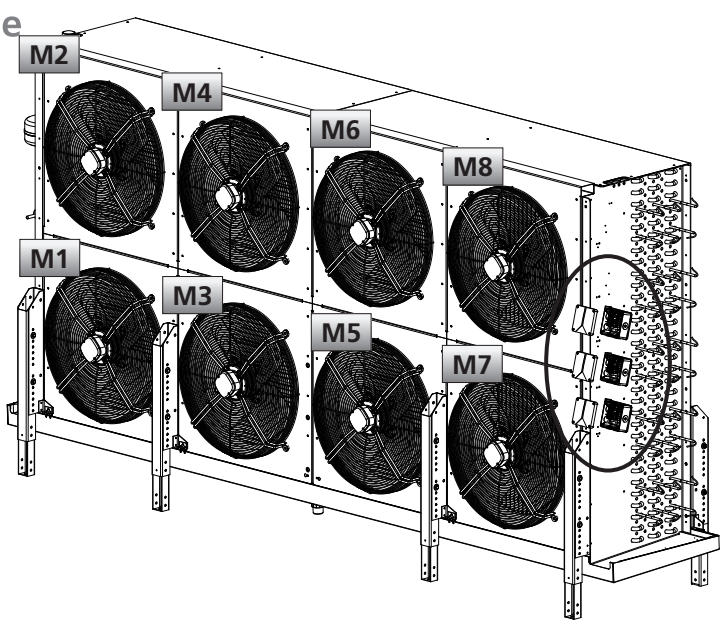

Küba SF *blastfreezer*

Motor

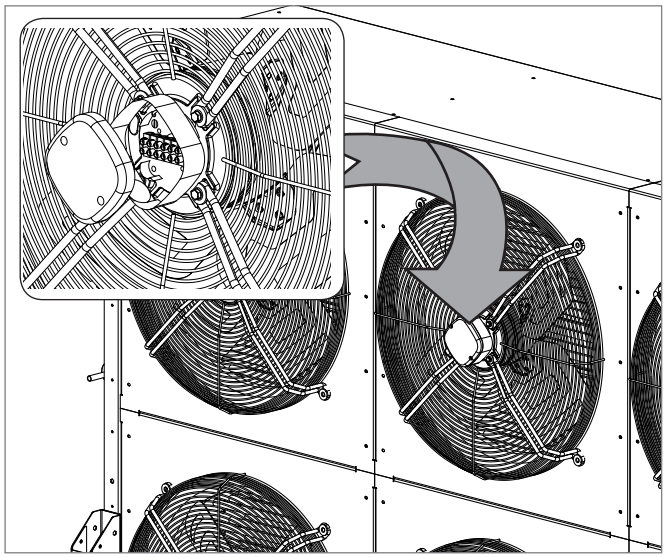

Electrical defrost

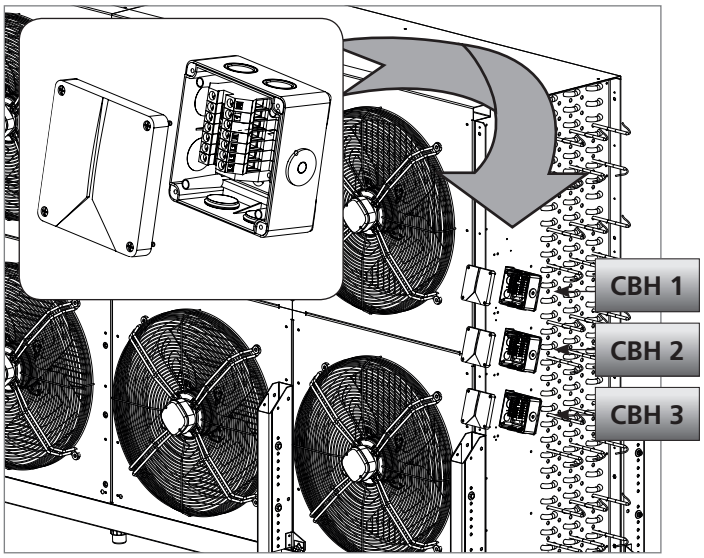

SF *blastfreezer*

Motor wiring diagram

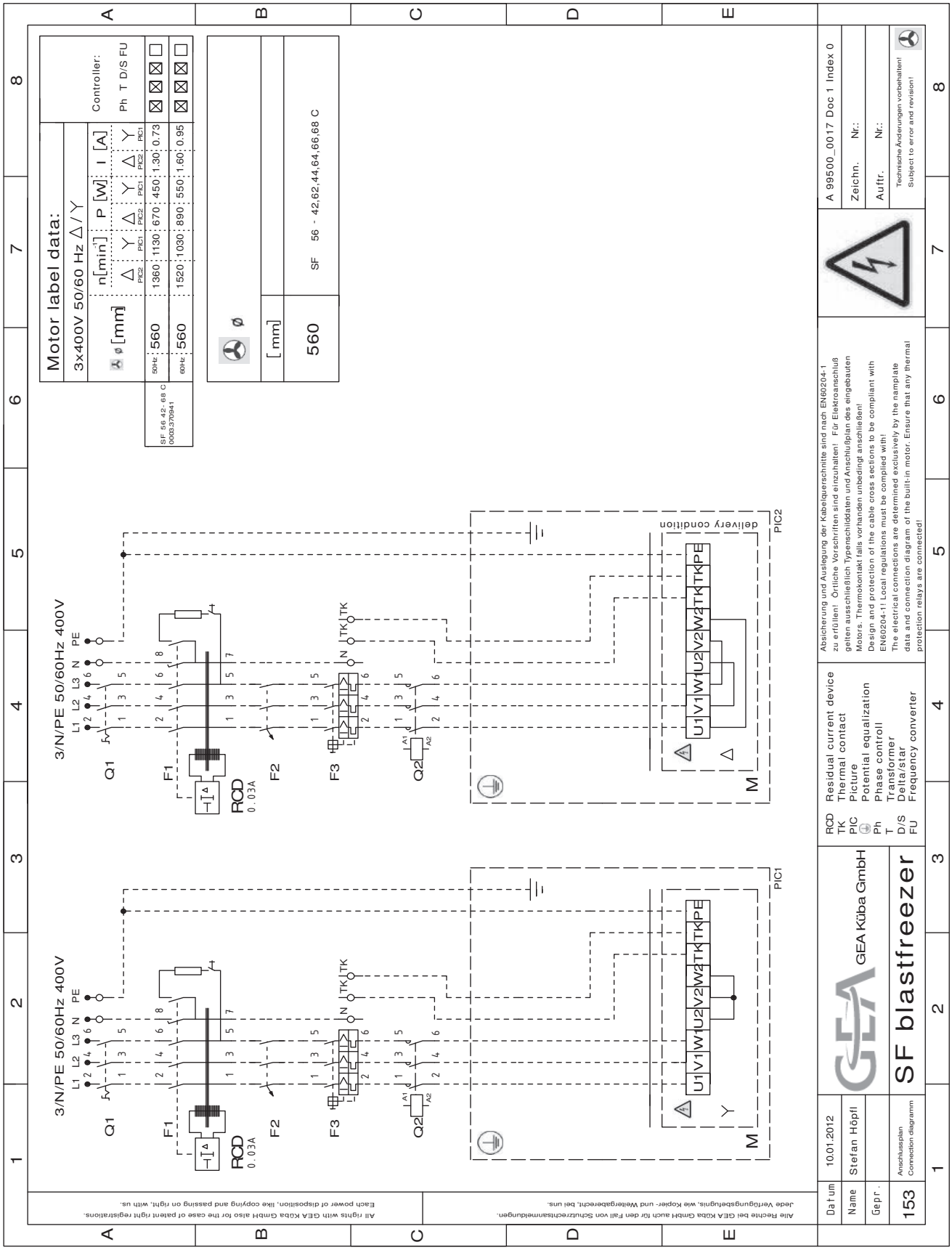

Motor wiring diagram (V1.60)

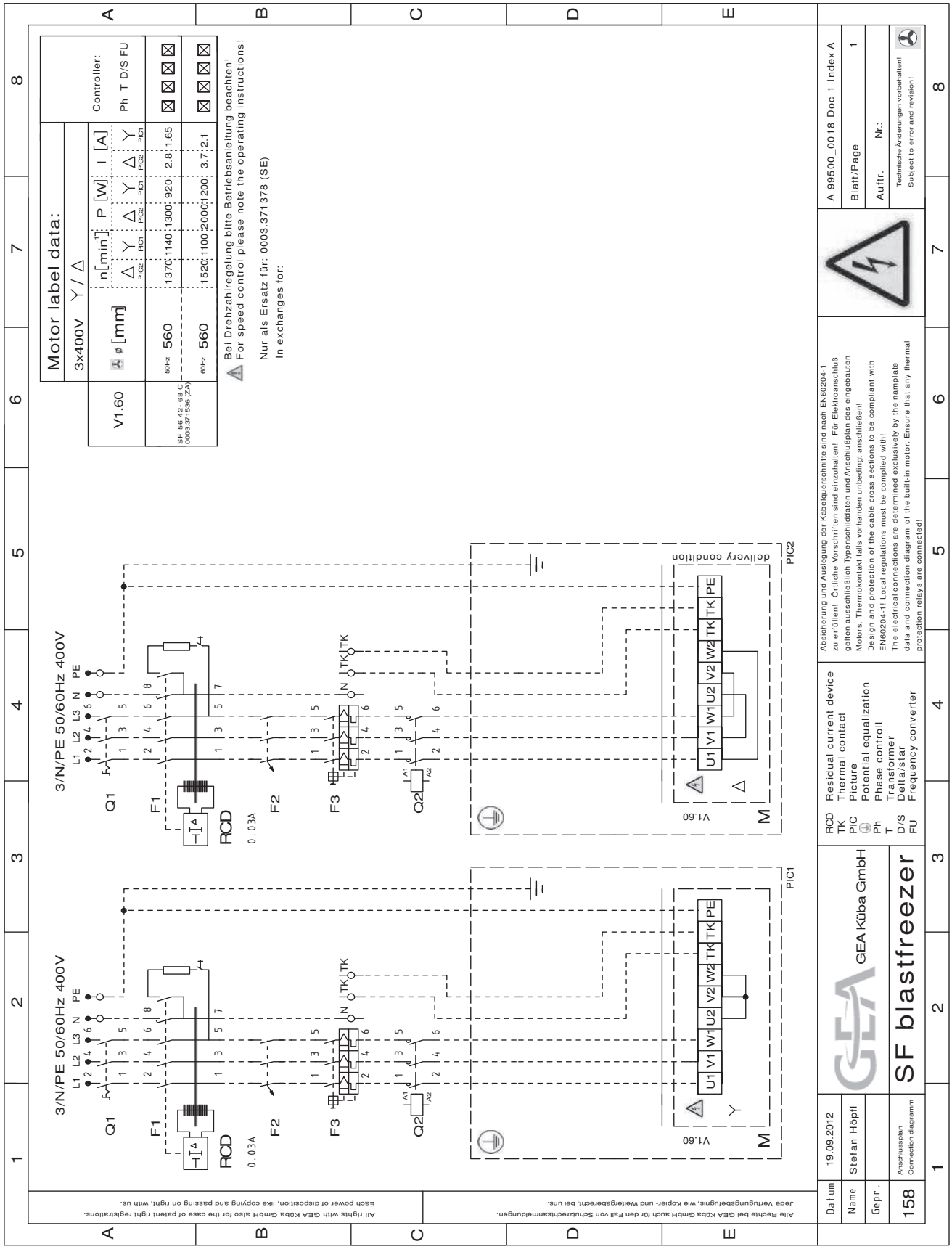

Electrical defrost wiring diagram

PIC 1

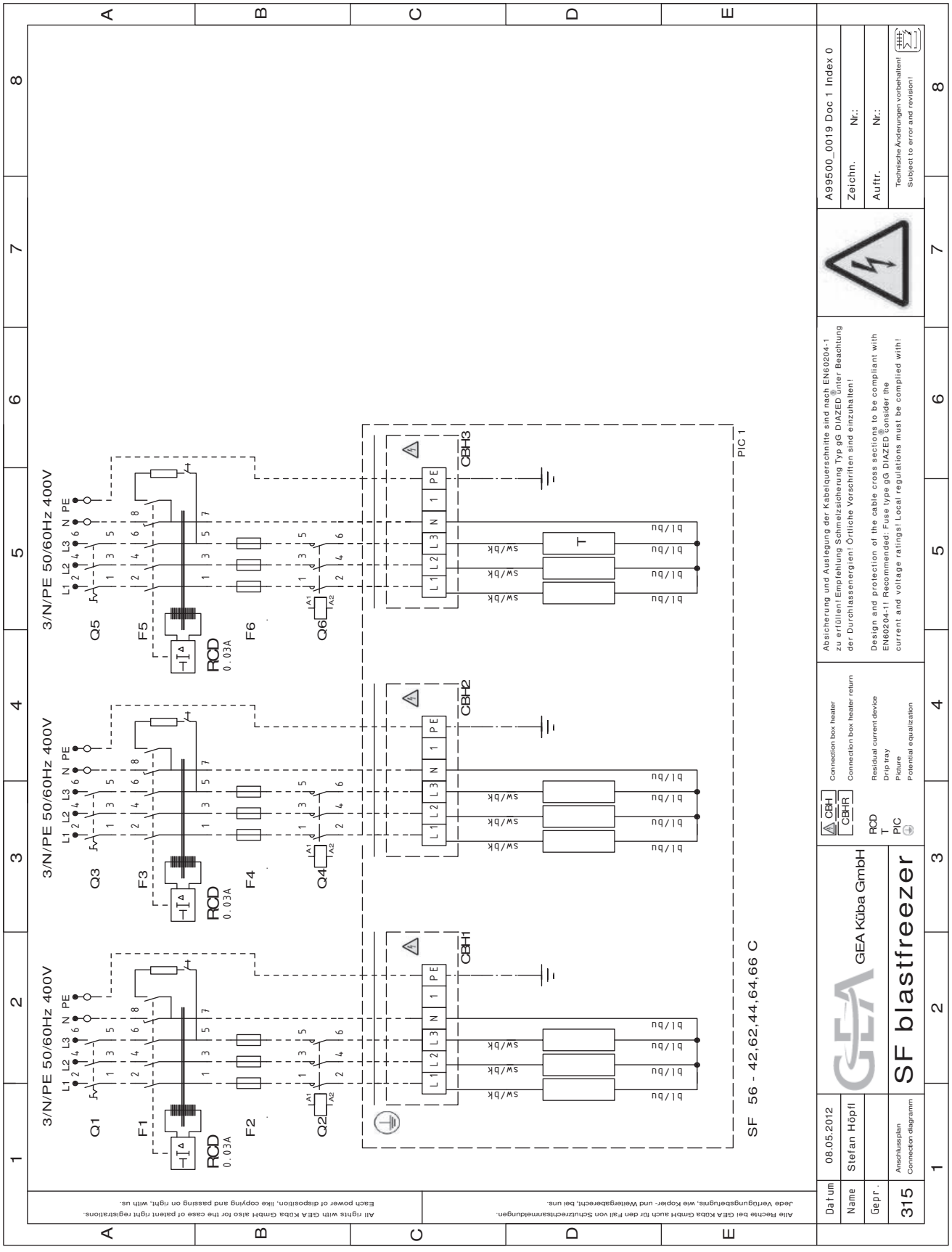

Electrical defrost wiring diagram

PIC 2

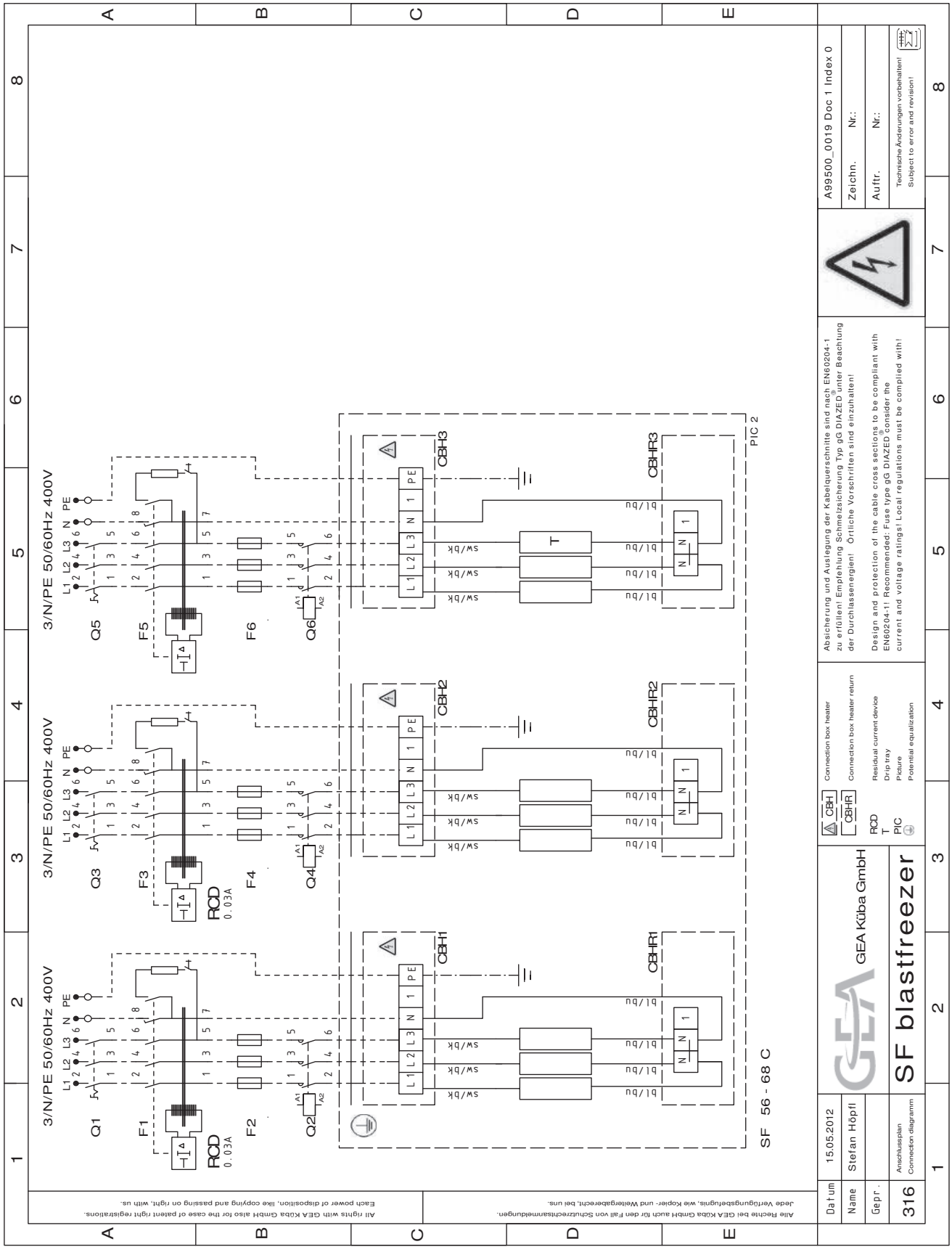

Cabling

SF.C *blastfreezer*

Standard/Series **Wiring diagram number: A99500_0019** (Doc 2; Index 0)																	
Type		Coil heating bar (KÖ)				Drip tray heating bar (D)									L1		
SFB.C SFK.C SFL.C	Finned length	Number	Length	Capacity P	Form	Number	Length	Capacity P	Form	Total capacity of all heating circuits	Total number of all heating circuits	Heating circuit no.	**PIC** **on the wiring diagram**	No. of heating element, coil KÖ	No. of heating element, drip tray D	No. of heating element, drip tray D (R)
Type	L [mm]	KÖ [pcs]	L [mm]	P [W]		TW [pcs]	L [mm]	P [W]		P [kW]	[pcs]	[Nb]		[pcs]	[pcs]	[pcs]
SFB.C SFK.C SFL.C	Finned length															
56-42 C	800	10	2250	860	U200	2	2250	860	U200	10.3	3	CBH1	1	1		
												CBH2	1	1		
												CBH3	1	1		
56-62 C	800	15	2250	860	U200	2	2250	860	U200	14.6	3	CBH1	1	2		
												CBH2	1	2		
												CBH3	1	1		
56-44 C	1600	10	3850	1435	U200	2	3850	1435	U200	17.2	3	CBH1	1	1		
												CBH2	1	1		
												CBH3	1	1		
56-64 C	1600	15	3850	1435	U200	2	3850	1435	U200	24.4	3	CBH1	1	2		
												CBH2	1	2		
												CBH3	1	1		
56-66 C	2400	15	5500	2000	U200	2	5500	2000	U200	34.0	3	CBH1	1	2		
												CBH2	1	2		
												CBH3	1	1		
56-68 C	3200	30	3650	1360	Z185/85	4	3500	1300	G	46.0	3	CBH1	2	4		
												CBH2	2	4		
												CBH3	2	3		

	CBH connection box Heater Heating circuit												CBHR connection box Heater return Heating circuit return			
L2			L3													
No. of heating element, coil KÖ	No. of heating element, drip tray D	No. of heating element, drip tray D (R)	No. of heating element, coil KÖ	No. of heating element, drip tray D	No. of heating element, drip tray D (R)	Total capacity of heating circuit P	Current L1	Current L2	Current L3	Recom-mended cable cross-section for supply line (building-side)	SKS	Junction box conn. box with earthing cable	Heating circuit no.	Junction box connection box	Minimum cable cross-section for return	Cable length for parts list
[pcs]	[pcs]	[pcs]	[pcs]	[pcs]	[pcs]	P [kW]	I [A]	I [A]	I [A]	min [mm²]	[Size]	CBH	[Nb]	CBHR	min [mm²]	[m]
												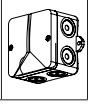		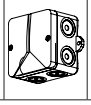		
1			2			3.4	3.7	3.7	7.5	2.50	4	ABOX060				
1			2			3.4	3.7	3.7	7.5	2.50	4	ABOX060				
1				D 2		3.4	3.7	3.7	7.5	2.50	4	ABOX060				
2			2			5.2	7.5	7.5	7.5	2.50	4	ABOX060				
2			2			5.2	7.5	7.5	7.5	2.50	4	ABOX060				
2				2 D		5.2	3.7	7.5	7.5	2.50	4	ABOX060				
1			2			5.7	6.2	6.2	12.5	2.50	4	ABOX060				
1			2			5.7	6.2	6.2	12.5	2.50	4	ABOX060				
1				2 D		5.7	6.2	6.2	12.5	2.50	4	ABOX060				
2			2			8.6	12.5	12.5	12.5	2.50	4	ABOX060				
2			2			8.6	12.5	12.5	12.5	2.50	4	ABOX060				
2				2 D		7.2	6.2	12.5	12.5	2.50	4	ABOX060				
2			2			12.0	17.4	17.4	17.4	2.50	5	ABOX060				
2			2			12.0	17.4	17.4	17.4	2.50	5	ABOX060				
2				2 D		10.0	8.7	17.4	17.4	2.50	5	ABOX060				
4			4			16.3	23.7	23.7	23.7	2.50	3	ABOX060	CBHR1	ABOX060	2.5	4.35
4			4			16.3	23.7	23.7	23.7	2.50	3	ABOX060	CBHR2	ABOX060	2.5	4.35
3				4 D		13.4	17.7	17.7	22.6	2.50	3	ABOX060	CBHR3	ABOX060	2.5	4.35

GEA Küba GmbH

Kühler Weg 1 · 82065 Baierbrunn · Germany
Tel.: +49 89/744 73-0 · Fax: +49 89/744 73-107
kueba@gea.com · www.kueba.com

© Copyright 2013 Küba GmbH · 0001.392267.1 · Status 10/2013
Technical modifications reserved