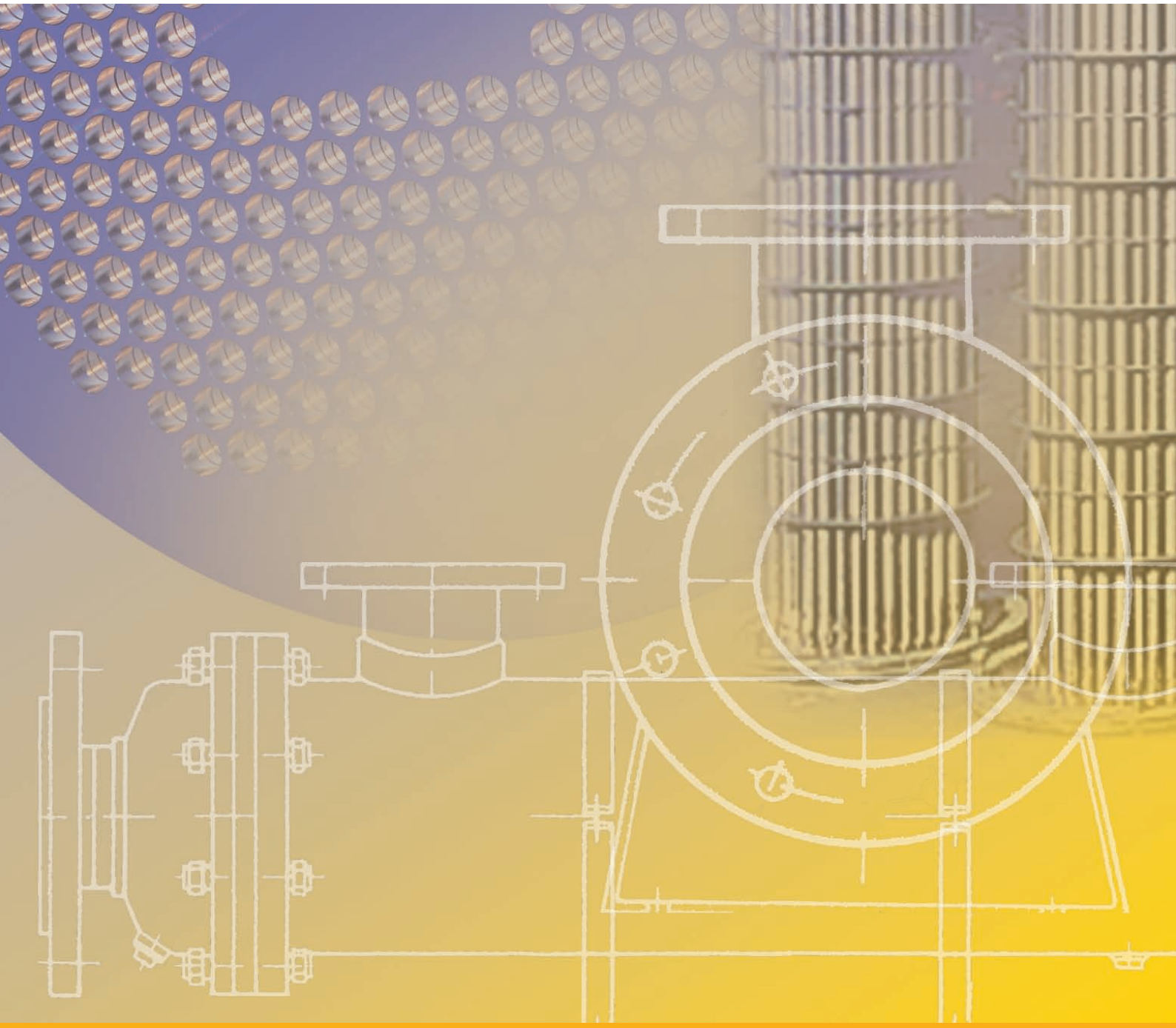

SPECIAL APPLICATIONS

Compact Heat Exchangers

Product Information

Content

Applications	page 3
Operating Principle	4
Certifications	5
Assembly	6
Sizes	7
Style KM - Design of Non-ferrous Metal	8
Style KM - Design of Stainless Steel	9
Operation and Maintenance	10
Tube Cleaning	11
Contacts	12

Shell-and-Tube Heat Exchangers KM

The product area Special Applications offers high-grade shell-and-tube heat exchangers, eg single tube heat exchangers or double tube safety heat exchangers, exhaust gas-, spiral- and compact heat exchangers.

The shell-and-tube heat exchangers of the KM series have been developed for demanding applications in industrial, processing and power systems.

They are the result of a specific development effort aimed at building smaller, lighter and thus less expensive shell-and-tube heat exchangers without sacrificing quality, length of service life or suitability for the most demanding applications.

This compact heat exchanger (KM) is available in two different basic types:

- KM non-ferrous metal type
- KM stainless steel type

High Power Density

Thanks to its specific welding know-how, GEA Renzmann & Grünewald has been able to increase the power density of the compact heat exchanger by 20% compared to conventional shell-and-tube heat exchangers of equal size. This makes the compact heat exchanger extremely small in volume.

Advantages

- robust and compact
- high power density
- low cost
- small sizes
- flexible design

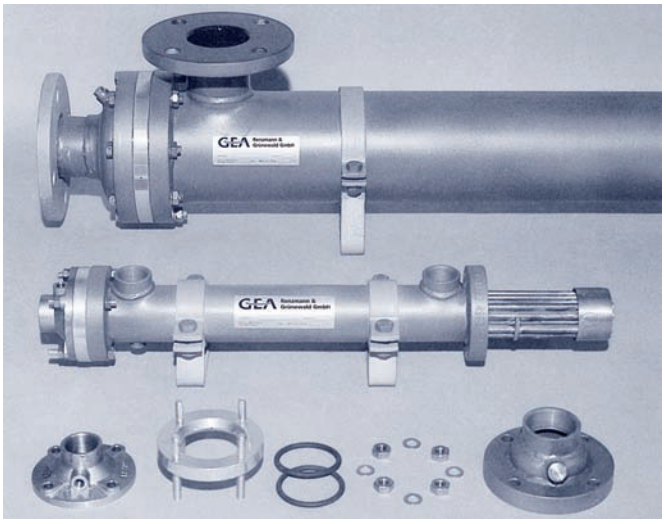

Fields of Application

The compact heat exchanger has a flexible design, which makes it suitable for almost any application without compromise. It can be supplied in different sizes and in any desired overall length with standard connections. Compact heat exchangers are available in horizontal, vertical and suspended designs and can be used for example as

- water/ pressure gas coolers
- water/ water coolers
- oil/ water coolers
- preheaters
- condensers and evaporators for all types of chemical and process systems
- machine coolers
- oil coolers for hydraulic systems
- oil or water coolers for power engines
- and for refridgeration and air conditioning applications

Our Partners

chemical industry

petrochemical industry

food processing industry

pulp industry

refridgeration equipment industry

compressor industry

power engines and machine industry

Conventional Operating Principle

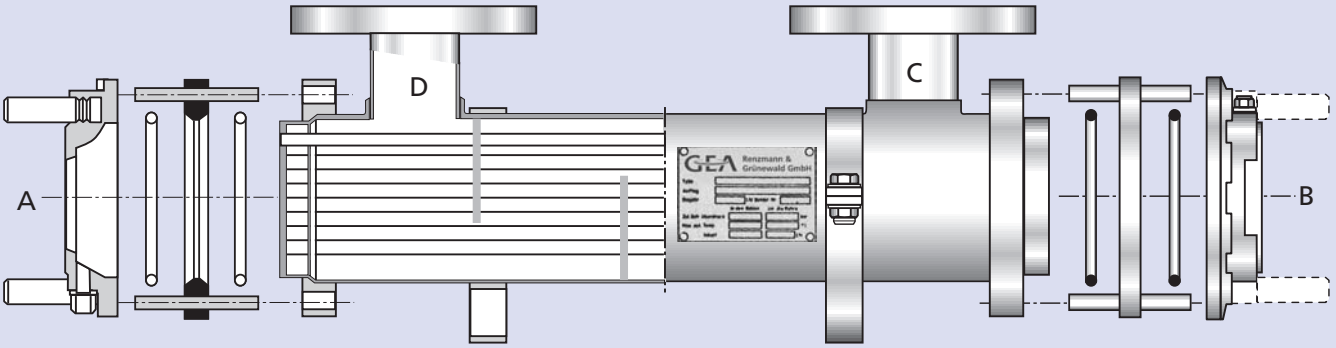

In the KM exchanger, heat is transferred between two fluids in the same manner as in a conventional shell and tube exchanger.

The fluid with the better heat transfer properties and/or the higher dirt concentration (mostly water) flows through the tubes from point A to B. The other fluid, mostly the clean one which usually has also lower heat transfer properties, eg oil, refridgerating agents or vapours from various products, passes counter-current outside of the tubes (from C to D). The number and position of the shell-side fluid guide plates (baffles) may differ, depending on the application.

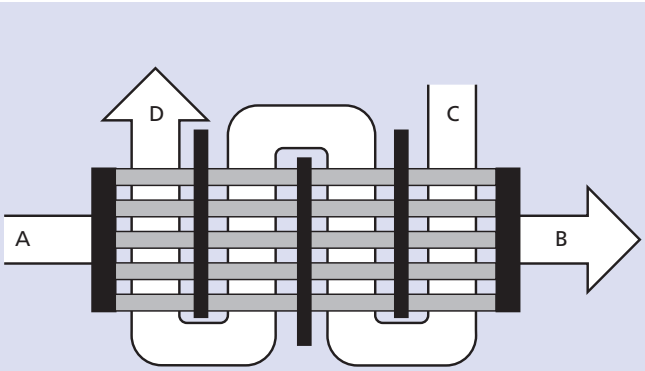

Controlled Double Seal

On the KM heat exchanger, a solution has been found to the sealing problem which - compared to the sealing system on conventional shell and tube exchangers - is much smarter, safer and also simpler and more practical in terms of maintainance.

The intermediate ring (B) featuring a fixed bolt is sealed with O-rings on both sides. The O-rings can be made of different materials - rubber, viton or AFLAS®. This design ensures that, when a head is removed, the shell side remains unaffected and properly sealed, though only one flange is to be connected respectively mounted.

A Continuous bore

B Intermediate ring

C Shell flange side O-ring seal

D Head flange side O-ring seal

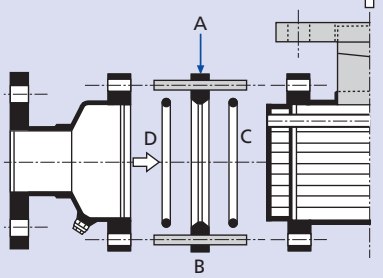

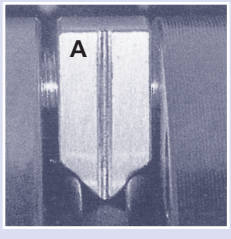

O-ring tightness is controlled on the two exchanger sides by means of a simple, but effective leak detecting feature, which is standard on KM exchangers. Each flange ring between the shell and head flange has two continuous bores (A). Leaks are thus visible before any damage can be done.

Minimum Construction Tolerance

The high power density of the KM heat exchanger is due to two factors: the flexible baffle arrengement and - what is more - the very low construction tolerance in the transition area between the heat exchanger tubes and the shell. This minimum tolerance is achieved through a laser-assisted manufacturing process, which minimizes bypass flows and thus eficiency losses.

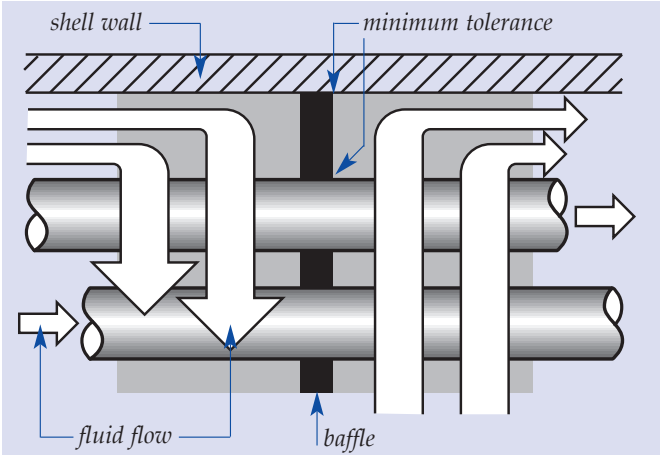

Certifications

All product processes of GEA Renzmann & Grünewald are due to the strict standards of national and international modern quality control systems like DIN ISO 9001, Ö-Norm 7812 or ASME-Codes U1 and UM (U-stamp and UM-stamp).
As a standard, the compact heat exchangers are designed according to the following directives:

- Pressure Vessel Regulation (valid until May 29,2002) with and without TÜV inspection / AD Merkblätter
- CEE Directive 97/23/EG with CE-marking / AD Merkblätter

Upon request the heat exchangers also can be dimensioned by constructional alteration accordingto following standards:

- ASME
- TEMA



Assembly



Computer Software for Design Variants

The optimum KM exchangers design is determined with help of a computer program, which does not only identify the smallest and thus optimum heat exchanger type, but takes account also of specific local conditions (dimensions, pressure drop, etc.)
The offers include calculations for different design variants, if requested, provided the relevant parameters have been specified.

To determine the optimum heat exchanger design, we require the following data:

- inlet and outlet temperatures for both fluids
- both fluid quantities
- clear definition of fluids
- admissible maximum pressure losses
- structural constraints

Variable Configurations

A KM exchanger that has for example a long slim shape according to the design data, can be integrated into the overall plant and connected in many different configurations. As the tube-side fluid flows through the heat exchanger in a single pass only, there are no limits to the designer's imagination in regard to the exchanger configuration. Based on a heat exchanger length of 1,800 mm, the figures show several arrangement options for such a heat exchanger.

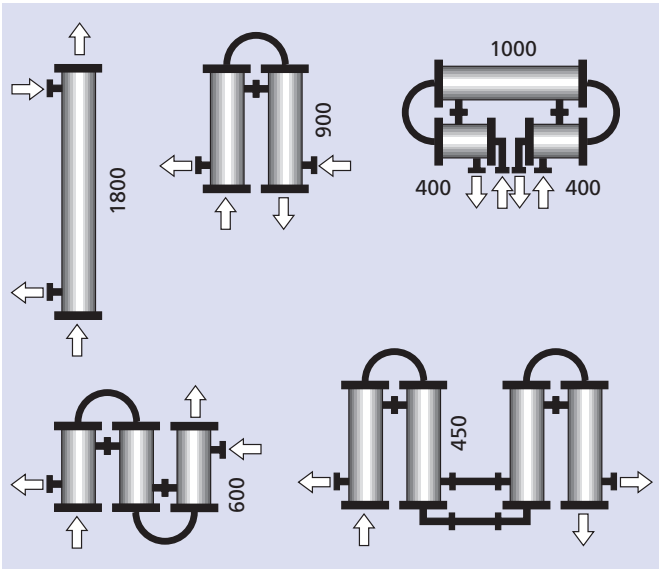

Variable Sizes for Any Application

The high power density of the KM exchangers is of benefit only if it does not affect the process or entail any structural or operational disadvantage. It is therefor important that the heat exchanger concept is flexible to allow the design and the materials of construction to be varied with a view to achieving the best possible thermal performance.
Here are three examples that show how heat exchanger sizes are determined for various applications. Different sizes can be chosen based on the admissible pressure loss.

Example 1:

Water preheater, completely made of stainless steel 1.4541 thermal capacity: 58.26 kW.

5.562 kg/s water is heated from 3 to 5.5°C water, which in turn cools down from 12.5 to 8.5°C.

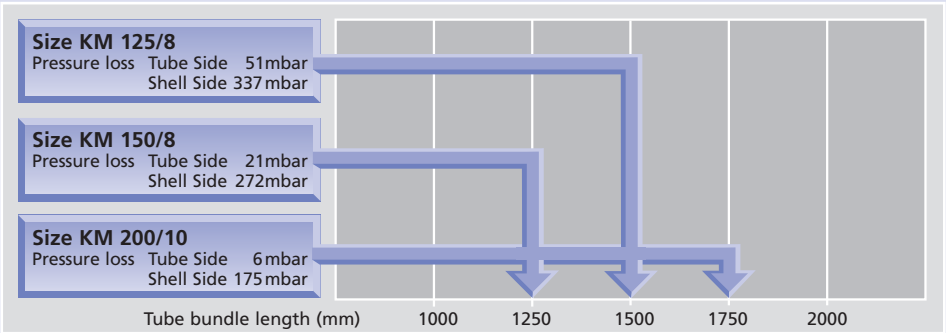

Example 2:

Compressed air cooler, thermal capacity: 3.9 KW. The diameter for the head flange and the shell is identical for sizes 65 and 100.

Tube side 4.5Nm³/min dry compressed air from 70 to 30°C, 600 mbar overpressure, by water which in turn heats up from 25 auf 27°C.

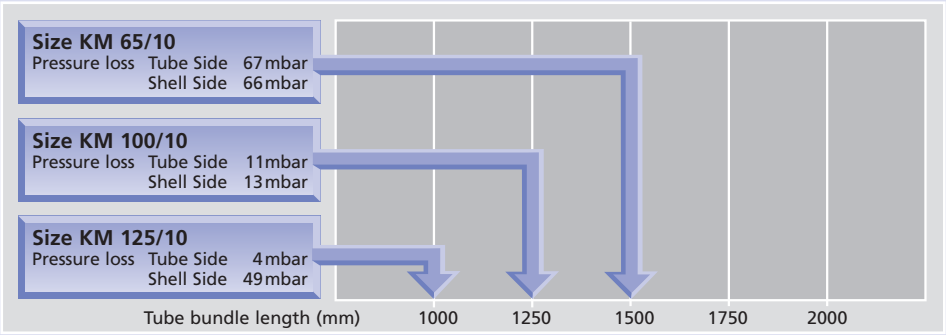

Example 3:

Motor water cooler, thermal capacity: 640 KW. Due to the large quantity of motor cooling water involved, a design has been chosen in which the water flows through the tubes.

13.9 kg/s motor water with 30% glycol cooled from 90 auf 78°C by service water, which in turn heats up from 60 to 75°C.

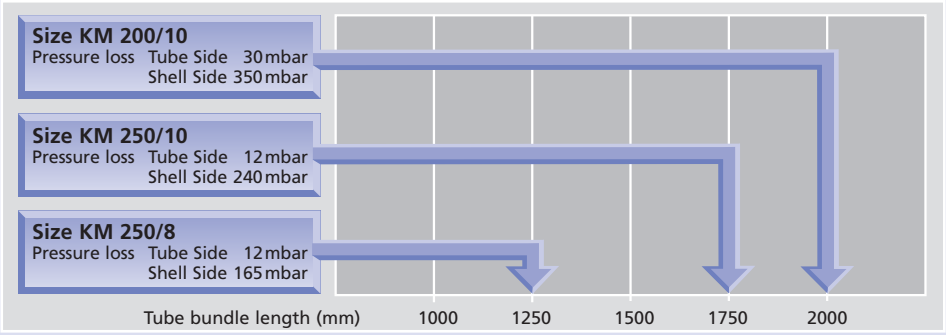

Style KM - Design of Non-ferrous Metal

Outline Drawing of Compact Heat Exchanger KM

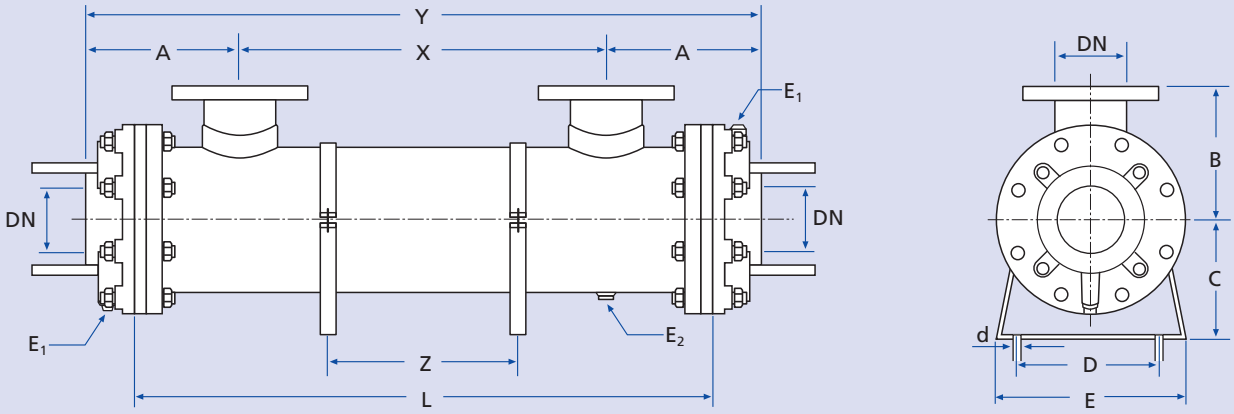

Dimension Table

E_1/E_2 vent and drain

Size	Nominal diameter DN*	A	B	C	D	E	E_1	E_2	d	L_{min}	L_{max}	X	Y	Z
KM 050	R1“	100	50	65	60	100	R1/8“	R1/4“	8	400	1500	L-75	L+125	L-200
KM 065	R11/2	115	62.5	75	75	115	R1/8“	R1/4“	8	500	1500	L-105	L+125	L-250
KM 100	DN 50	122,5	130	100	115	170	R1/4“	R1/4“	10	800	2000	L-130	L+115	L-270
KM 125	DN 65	142,5	150	110	135	185	R1/4“	R1/4“	10	800	2500	L-155	L+130	L-340
KM 150	DN 80	165	175	125	170	220	R1/4“	R1/4“	10	1000	3000	L-180	L+150	L-370
KM 200	DN 100	216	200	165	220	300	R1/4“	R3/8“	12	1000	3000	L-225	L+207	L-500
KM 250	DN 150	256	230	200	275	360	R3/8“	R3/8“	14	1000	3000	L-305	L+207	L-600

* Connections for KM050 and KM065 accord. to DIN2986 - Connections for KM100 and larger accord. to DIN2633 on tube side - Connections for KM100 and larger accord to DIN2624 on shell side.

Materials

Internal Tubes:	SF-Cu CuNi10Fe CuZn37 Cu20Al
Tubesheets:	CuNi10Fe
Baffles:	Stainless steel 1.4541
Shell:	Stainless steel 1.4541
Shell flange:	Stainless steel 1.4541
Heads:	GK-CuAl10Ni (sea water resi.) Stainless steel
Seals:	Perbunan, Viton

Gap-free Design

On this basic design, we have been able to make the connection between the tubes and the tubesheet absolutely gap-free.

Admissible operating data (pressure/temperature)

Tube side:	16 bar/130°C
Shell side:	10 bar/130°C

Heat exchangers for higher operating pressure and temperatures are available upon request.

Style KM - Design of Stainless Steel

Outline Drawing of Compact Heat Exchanger KM

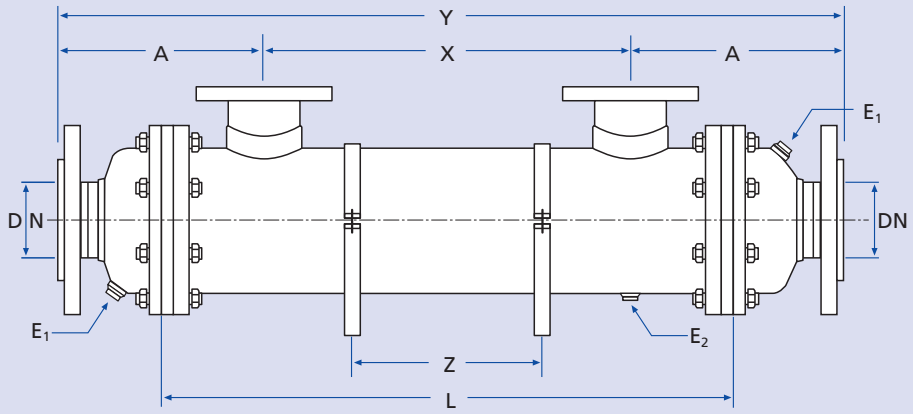

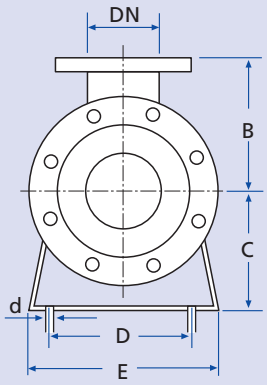

Dimension Table

E_1/E_2 Vent and drain

Size	Nominal diameter DN	A	B	C	D	E	E_1	E_2	d	L_{min}	L_{max}	X	Y	Z
KM 050	R1“	115	50	65	60	100	R1/8“	R1/4“	8	400	1500	L-75	L+155	L-200
KM 065	R11/2	135	62.5	75	75	115	R1/8“	R1/4“	8	500	1500	L-105	L+165	L-250
KM 100	DN 50	197.5	130	100	115	170	R1/4“	R1/4“	10	800	2000	L-130	L+265	L-270
KM 125	DN 65	222	150	110	135	185	R1/4“	R1/4“	10	800	2500	L-155	L+289	L-340
KM 150	DN 80	250	175	125	170	220	R1/4“	R1/4“	10	800	6000	L-180	L+320	L-370
KM 200	DN 100	266	200	165	220	300	R1/4“	R3/8“	12	800	6000	L-225	L+327	L-500
KM 250	DN 150	326	230	200	275	360	R3/8“	R3/8“	14	800	6000	L-305	L+347	L-600
KM 300	DN 150	361	250	230	325	410	R3/8“	R3/8“	14	800	6000	L-340	L+382	L-650

* Connections for KM050 and KM065 accord. to DIN2986 - Connections for KM100 and larger accord. to DIN2642

Materials

Internal Tubes:	Stainless steel 1.4541
Tubesheets:	Stainless steel 1.4541
Baffles:	Stainless steel 1.4541
Shell:	Stainless steel 1.4541
Shell flange:	Stainless steel 1.4541
Heads:	Stainless steel 1.4541
Seals:	Perbunan, Viton, AFLAS®
Intermediate rings and mounts:	Galvanized steel, as these parts are not in contact with the fluid.

Notes

- This type can be combined with materials of the non-ferrous type
- Other stainless steels or other flange connections are available upon request

Assembly Variants

The two basic KM exchanger types are supplied as standard versions for horizontal, suspended and vertical arrangement.

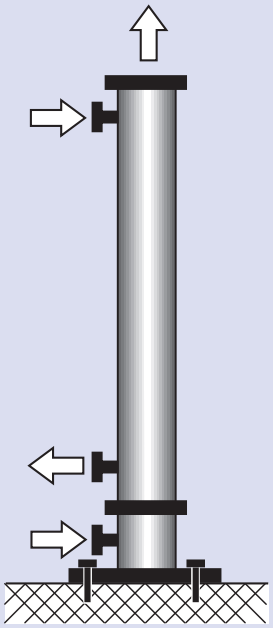

Vertical Assembly

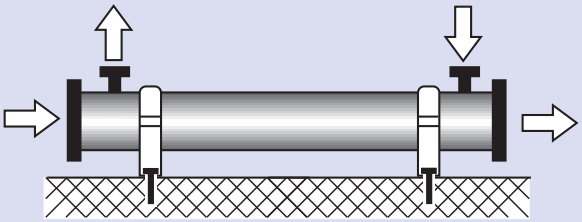

Horizontal Assembly

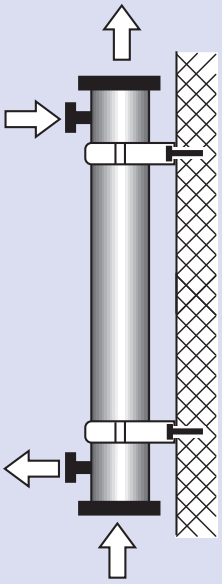

Suspended Assembly

In addition to their extremely high power density and compact construction, KM heat exchangers offer excellent operating conditions.

Here it is important that temperatures, flows and thermal capacities match the design data and that there are no unknown boundary operating conditions that may affect the quality and performance of the heat exchangers.

Where dirty fluids are involved in the heat exchange process, it is necessary to determine the fouling factor to be used in designing the heat exchanger to achieve long cleaning intervals and facilitate the cleaning operation.

In the case of dirty fluids, KM exchanger offer a general advantage over plate exchanger systems in that they do not require the relatively work-intensive replacement of expensive gasket sets. KM exchangers just need to be opened on the fouled side. Cleaning the tube side is quiet easy, even if only one head is opened. The pressurized, closed fluid circuit on the shell side remains in unaffected, as-built condition.

Cleaning the shell side, if necessary, is also quiet simple, as the tube bundle can be pulled out at either end.

Any work to be performed on the heat exchangers, such as assembly, cleaning, venting, draining, etc. should be carried out by skilled personnel who are familiar with, and observe, the relevant standards and safety regulations (high presures, hot fluids, refridgerating agents etc.).

Tube Cleaning

GEA Renzmann & Grünewald offers its own proven cleaner for the tube side of the cooling tubes.

The tube cleaner consists of a cleaning tool - a cage - attached to a pipe of suitable length for the tube bundle to be cleaned. The pipe is provided with a hose connection and a handle. During the cleaning operation, the spiral wire coils effectively scrape off the dirt, which is than washed away with water introduced through wash nozzles.

Tube Cleaner

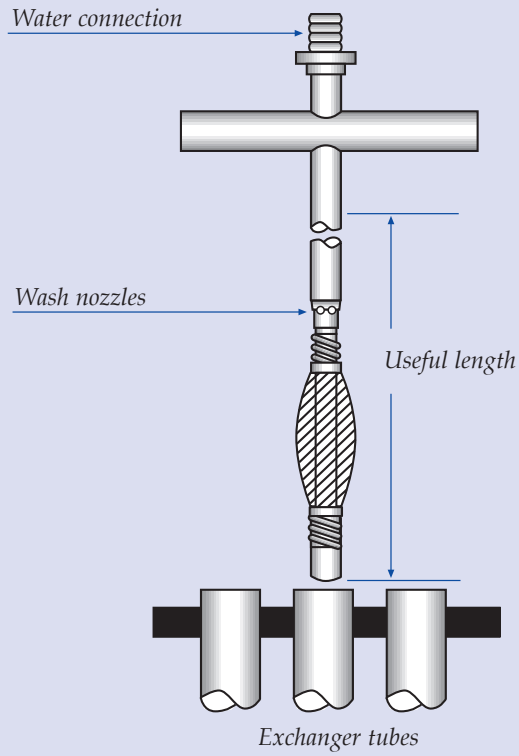

Removing the head for Cleaning

Simole head removal for access to the tube side

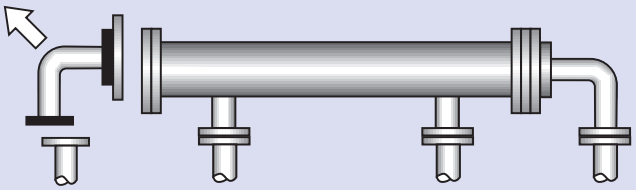

Design, Calculations and Inspection Regulations

As GEA Renzmann & Grünewald is a TÜV-approved manufacturer in accordance with the AD specification HPO, the standard version KM exchangers are inspected by specialists in confirmity with the Pressure Vessels Ordinance (Art. 8, groups II and V). If requested, we can of course arrange for an inspection of any size of heat exchanger by the TÜV inspection agency or any similar institution. Material thickness and stability calculations are made in accordance with the AD specifications. This shows, that the KM exchangers satisfy most instruction and inspection requirements.
The fluid connections are designed to DIN 2646, DIN 2576, DIN 2633 and DIN 2986, as required by the general design and construction regulations.

Painting, Packing, Insulation

The heat exchangers are painted and packed for shipment in accordance with modern standard methods or as the customer may instruct.
The small size and low weight of the heat exchangers offer also cost advantages in regard to packing and shipment. KM heat exchangers are available in insulated version.



Our Team
at Your Disposal

Special Applications

Shell-and-Tube Heat Exchangers
Compact Heat Exchangers
Natural Gas Preheaters
Exhaust Air Heat Exchangers

Sales:

Mr Jürgen Venter — Phone +49(0)67 51/93 03-1 70, e-mail: Juergen.Venter@geagroup.com

Project Execution:

Mr Stefan Krolla — Phone +49(0)67 51/93 03-1 71, e-mail: Stefan.Krolla@geagroup.com

Mr Lothar Barth — Phone +49(0)67 51/93 03-1 72, e-mail: Lothar.Barth@geagroup.com

Representatives Germany:

Mr Ulrich Schieritz, *Sales Office Area West* — Phone +49(0)23 61/65 92 66, e-mail: Ulrich.Schieritz@geagroup.com

Ms Gisela Müller, *Secretary Sales Office Area West* — Phone +49(0)23 4/94342-333, e-mail: Gisela.Mueller@geagroup.com

Mr Gustav-Lothar Krueger, *Sales Office Area South-West* — Phone +49(0)1 71/540 88 06, e-mail: LotharKrueger@gmx.com

Mr Franz Bauer, *Sales Office Area South* — Phone +49(0)82 54/26 50, e-mail: Franz.Bauer@geagroup.com

Any data or other information in this document shall be deemed to be a general description of product properties and shall not be binding upon GEA Renzmann & Grünewald. Binding product specifications may be agreed by GEA Renzmann & Grünewald in bids, proposals, tenders or other offers issued in response to inquiries or call for tenders or other invitations to bid.

For more information please look up our website at www.renzmann.com

Process Equipment
GEA Renzmann & Grünewald GmbH

Industriestraße 6, D-55569 Monzingen
Phone +49(0) 67 51/93 03-0 · Fax +49(0) 67 51/93 03-1 00
Petra.Shurtleff@geagroup.com · www.renzmann.com

As of 6/08 · 1.000